CONTRACT DOCUMENTS
FOR
WASTEWATER COLLECTION SYSTEM & WWTF IMPROVEMENTS PROJECT

FUNDED IN PART BY
THE WASHINGTON STATE DEPARTMENT OF ECOLOGY
STATE REVOLVING FUND #WQC-2020-COTCIR-00045

PREPARED FOR:

The Confederated Tribes of the Chehalis Reservation

Prepared by:

CENTURY WEST ENGINEERING
5500 Meadows Road, Suite 250
Lake Oswego, Oregon 97035
(503)419-2130

March, 2021

Project No. 41445.001.01

Copy Number __

CONTRACT DOCUMENTS
FOR
WASTEWATER COLLECTION SYSTEM & WWTF IMPROVEMENTS PROJECT
The Confederated Tribes of the Chehalis Reservation
WASHINGTON STATE DEPARTMENT OF ECOLOGY STATE REVOLVING FUND
#WQC-2020-COTCIR-00045

The technical material and specifications listed below were prepared by or under the direct supervision of the undersigned, whose seals, as professional engineers licensed to practice as such in the State of Washington, are affixed below:

PART 7; SPECIAL PROVISIONS TO THE STANDARD SPECIFICATIONS

Dennis D. Fuller, P.E.

PART 7: TECHNICAL SPECIFICATIONS 40 05 50, 40 70 00, 43 11 33

2/10/2021

Allison Esvelt, P.E.

PART 7: TECHNICAL SPECIFICATIONS 26 00 00, 26 60 01, 26 60 02, 26 05 19, 26 05 26, 26 05 33, 26 25 16, 26 27 26, 26 28 00, 26 28 16, 26 29 13, 26 70 00, 26 90 21, 26 90 22, 26 90 25

Grady Weisz, P.E.

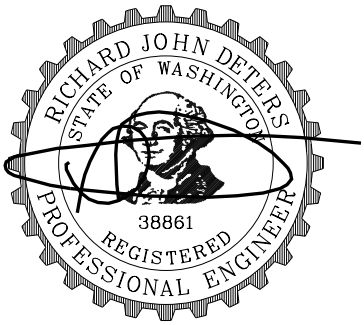

DIGITAL SIGNATURE

Richard Deters, P.E.

PART 7: TECHNICAL SPECIFICATIONS 11 26 00, 40 42 00

Lori Rousseau, P.E.

TABLE OF CONTENTS

PART 1

ADVERTISEMENT FOR BIDS

ADVERTISEMENT FOR BIDS

The Confederated Tribes of the Chehalis Reservation
Wastewater Collection System and WWTF Upgrades Project

Sealed bids for the Wastewater Collection and WWTF Upgrade Project will be received at The Confederated Tribes of the Chehalis Reservation's Administration Offices, 420 Howanut Road, Oakville, WA. 98568 or by email at Bvoncluck@Chehalistribe.org until 2:00:00 p.m. April 26, 2021, at which time the bids will be evaluated based on specific criteria provided in the Contract Documents. There will be no public bid opening for this project.

The project generally consists of the following work:

Construction of improvements including septic tank effluent pumping stations, sewer force mains, gravity sewer mains, a sewer lift station, electrical, SCADA and piping modifications at the Tribe's MBR treatment facility, and other related work

One hundred, eighty (180) working days will be allowed to complete the work.

Each proposal must be submitted on the prescribed form. The successful bidder will be required to furnish a performance bond and payment bond, each in the full amount of the contract price.

Bidders may view and obtain project documents at https://orpin.oregon.gov Bidders may also download digital documents at no cost http://www.chehalistribe.org/departments/planning-department/view-our-current-projects/. Any questions regarding this plan room, shall be directed to plan room administration at Bvoncluck@ChehalisTribe.org. Partial sets of Bidding Documents will not be available from the Issuing Office. Neither Owner nor Engineer will be responsible for full or partial sets of Bidding Documents, including Addenda if any, obtained from sources other than the Issuing Office.

A Pre-Bid meeting will be held at the WWTF at 10:00:00 a.m. on April 7, 2021, by appointment only so that safe distancing can be planned for, to answer questions about the project. For information regarding the proposed work, contact Ron Weigel, P.E. of Century West Engineering (rweigel@centurywest.com).

This project is funded through the Washington State Department of Ecology State Revolving Fund Program with Federal funds from the Environmental Protection Agency. All work performed on this project will be subject to the State wage or Federal rates whichever is higher and must meet the requirements and provisions of the Washington State Department of Ecology; State Revolving Funds. Award of the construction contract is contingent upon approval by the Business Committee and the funding agency. All contractors submitting a bid for this project must be licensed in the State of Washington.

The Successful bidder will be required to conform to the wage requirements prescribed by the federal Davis-Bacon and Relate Acts which requires that all laborers and mechanics employed by contractors and subcontractors performing on contracts funded in whole or in part by SRF appropriations in excess of $2000 pay their laborers

and mechanics not less than the prevailing wage rates and fringe benefits, and determined by the Secretary of Labor, for corresponding classes of laborers and mechanics employed on similar projects in the area.

The Confederated Tribes of the Chehalis Reservation shall have the right to reject any or all bids not accompanied by bid security or data required by the bidding documents or a bid in any way incomplete or irregular.

Brian Von Clück
Utilities Construction Project Coordinator
Planning Department
420 Howanut Rd.
Oakville, WA. 98568
bvoncluck@Chehalistribe.org

PART 2

INSTRUCTIONS TO BIDDERS

INSTRUCTIONS TO BIDDERS

GENERAL DESCRIPTION OF THE PROJECT

A general description of the work to be done is contained in the "Advertisement for Bids". The scope is indicated on the accompanying Drawings and specified in applicable parts of these Contract Documents.

The work contemplated under this Contract includes all labor, tools, machinery, materials, transportation, equipment and services necessary for, and reasonably incidental to, the completion of all work in connection with the project described in the Contract Documents.

CONTRACT DOCUMENTS:

The Contract Documents under which it is proposed to execute this work consist of all material bound herewith, other documents included by reference, plus any addenda incorporated into the documents. The Contract Documents generally consist of; but are not limited to, the contract plans (bound herein), the “Standard Specifications for Road, Bridge, and Municipal Construction, 2020”, and Special Provisions bound herein, and all other documents bound herein.

The Contract Documents are intended to be mutually cooperative and to provide all details reasonably required for the execution of the proposed work. Any Bidder contemplating the submission of a proposal shall have thoroughly examined all of the various parts of these documents, and should there be any doubt as to the meaning or intent of said Contract Documents, the Bidder should request of the Engineer, in writing, at least six (6) working days prior to bid opening an interpretation thereof. Any interpretation or change in said Contract Documents will be made only in writing, in the form of addenda to the documents and will be furnished to all Bidders receiving a set of the documents, who shall indicate receipt of same in the space provided on the proposal form. The Owner will not be responsible for any other explanation or interpretation of said documents.

UNIT PRICE BID ITEMS:

When the bid for the work is to be submitted on a unit price basis, unit price bids will be accepted on all items of work set forth in the Proposal Form, except those designated to be paid for as "Lump Sum."

The estimate of quantities of work to be done is tabulated in the Proposal Form and, although stated with as much accuracy as possible, is approximate only and is assumed solely for the basis of calculation upon which the award of contract shall be made. Payment to the Contractor will be made on the measurement of the work actually performed by the Contractor as specified in the Contract Documents. The Owner reserves the right to increase or diminish the amount of any class of work as may be deemed necessary, unless otherwise specified in the "Special Provisions".

LUMP SUM BID ITEMS:

When the bid for the work is to be submitted on a lump sum basis, a single lump sum price will be accepted on all items of work set forth in the Proposal Form. The total amount to be paid the Contractor shall be the amount of the lump sum bid as adjusted for additions or deletions resulting from change orders.

PREPARATION OF PROPOSAL FORM:

All blank spaces in the Proposal Form must be filled in, in ink or typewritten. No changes shall be made in the phraseology of the forms. In case of a discrepancy between the unit prices and the extended totals, unit prices will prevail.

Any bid shall be deemed informal which contains omissions, erasures, alterations, or additions of any kind, or items uncalled for, in which any of the items are obviously unbalanced, or which in any manner shall fail to conform to the conditions or intent of the Contract Documents.

The Bidder shall list proposed subcontractors, as required, within the space prescribed in the Proposal Form. The Owner reserves the right to refuse work to those subcontractors that the Owner deems unqualified for this project.

The Bidder shall sign the Proposal Form in the space provided therefore. If the Bidder is a Corporation, the legal name of the Corporation shall be set forth in the space provided, together with the signature of the officer or officers authorized to sign contracts on behalf of the Corporation. If Bidder is a Co-partnership, the true name of the firm shall be set forth in the space provided, together with the signature of the partner or partners authorized to sign contracts in behalf of the Co-partnership. If signature is by an Agent, other than an officer of a Corporation or a member of a Partnership, a Power-of-Attorney must be on file with the Owner prior to opening of proposals or submitted with the bid, otherwise the bid will be regarded as not properly authorized.

All bid forms must be fully completed to be scored and ranked by the selection committee.

SUBMISSION OF PROPOSAL:

Each proposal must be submitted at the time and place prescribed in the Advertisement for Bids. Proposals must be on the Proposal Form contained herein. Each proposal must be submitted in a sealed envelope, plainly marked on the outside as Bid Proposal for: Wastewater Collection System and WWTF Upgrades Project and the envelope should bear on the outside the Bidder's name and address or by email at Bvoncluck@Chehalistribe.org.

If forwarded by mail, the sealed envelope containing the bid must be enclosed in another envelope addressed to Confederated Tribes of the Chehalis Reservation, Wastewater Collection System and WWTF Upgrades Project, 420 Howanut Road, Oakville, WA. 98568. It is the Bidder's sole responsibility to ensure that its Proposal is delivered to the location of the Bid Opening at the appointed place and time.

MODIFICATION OR WITHDRAWAL OF PROPOSAL:

Any bidder may modify his/her bid by written, signed communication at any time prior to the scheduled closing time for receipt of bids, provided such communication is received by the Confederated Tribes of the Chehalis Reservation prior to the closing time by mail, recognized carrier, or hand delivery. The written communication should be in a sealed envelope and marked as "Wastewater Collection System and WWTF Upgrades Project, not reveal the bid price but should state the addition or subtraction or other modification so that the final prices or terms will not be known by the Owner until the sealed bid is opened.

Any bid may be withdrawn prior to the scheduled time for the opening of bids in the same manner. No bid may be withdrawn after the time scheduled for opening of bids, unless the time specified in the paragraph "Award of Contract" of this "Instructions to Bidders" shall have elapsed.

OPENING OF BIDS:

After the designated date and time for bid submission all proposals will be opened and evaluated by a selection committee based on the specific selection criteria provided in these documents. Any bids received after the scheduled closing time for receipt of the bids will be returned to the Bidder unopened. There will be no public bid opening for this project.

QUALIFICATIONS OF BIDDERS:

The Owner may take such investigations it deems necessary to determine the ability of the Bidder to perform the work, and the Bidder shall furnish to the Owner all such information and data for this purpose as the Owner may request. The Owner reserves the right to reject any bid if the evidence submitted by, or investigation of, such Bidder fails to satisfy the Owner that such Bidder is properly qualified to carry out the obligations of the Contract and to complete that work contemplated therein. Conditional bids will not be accepted.

BIDDER'S UNDERSTANDING:

Each Bidder must inform itself of the conditions relating to the execution of the work, and it is assumed that the Bidder will inspect the site and make itself thoroughly familiar with all the Contract Documents. Failure to do so will not relieve the successful Bidder of its obligation to enter into a contract and complete the contemplated work in strict accordance with the Contract Documents. The Bidder's attention is called to the Special Provisions section of the Contract Documents in regards to Bidder's obligation to verify all information concerning site and subsurface conditions.

Each Bidder shall inform itself of, and the Bidder awarded a Contract shall comply with: federal, state and local laws, statutes and ordinances relative to the execution of the work. This requirement includes, but is not limited to, applicable regulations concerning employment of labor, protection of public and employee safety and health, environmental protection, the protection of natural resources, fire protection, burning and non-burning requirements, permits, fees, and similar subject.

SELECTED BIDDER:

The selected Bidder will be determined by the highest ranking proposal based on scoring of the proposal on the specific criteria provided in these Documents. The Owner reserves the right to accept or reject any or all bids.

BASIS OF AWARD

Award will be made to the Bidder with the highest ranking Proposal. The total bid price used in bid evaluations will be based on the Base Bid Price plus any combination of additive alternatives that the Tribe selects. The Owner reserves the right to accept or reject any or all Bids and select any additive alternates in the bid.

AWARD OF CONTRACT:

Within thirty (30) calendar days after the opening of bids, the Owner shall either accept one bid or reject any or all bids. The Owner reserves the right to waive any informalities and irregularities in said bids. The award will be made by the Owner on the basis of that bid from the lowest responsive, responsible, qualified Bidder which, in the Owner's sole and absolute judgment, will best serve the interest of the Owner. When projects are paid for in part by federal aid, the award will be made on the basis of that bid submitted by the responsible Bidder submitting the lowest proposal acceptable to the financing agency.

The acceptance of the bid will be written notice, mailed, digitally mailed, or delivered to the office designated in the Proposal Form. In the event of failure of the highest scored responsible Bidder to sign and return the Agreement with acceptable “Payment Bond”, "Performance Bond", and Insurance Certificate as prescribed herein, the Owner may award the Contract to the next highest scored responsible Bidder. Such award, if made, will be within sixty (60) calendar days after the opening of bids.

EXECUTION OF AGREEMENT:

The successful Bidder shall, within ten (10) calendar days after receiving Notice of Award, sign and deliver to the Owner the Agreement hereto attached together with the acceptable bonds and certificate of insurance as required by these documents. Within ten (10) calendar days after receiving the signed Agreement with acceptable bonds from the successful Bidder, the Owner's authorized agent will sign the Agreement. Signature by both parties constitutes execution of the Agreement.

It is anticipated that this project will be funded in part by the Washington State Department of Ecology. Neither the State Of Washington nor any of its departments or employees are, or shall be, a party to this contract or any subcontract.

PAYMENT AND PERFORMANCE BONDS:

The successful Bidder shall file with the Owner a "Performance Bond" and a "Payment Bond" on the forms bound herewith, or forms that are substantially similar. Each in the full amount of the contract price, as security for the faithful performance of the Contract and payment of all persons supplying labor and materials for the completion of the work, and to cover all guarantees against defective workmanship or materials, Performance and Payment Bonds shall extend through the warrantee period specified in the Agreement after the date of final acceptance of the work by the Owner. The surety company furnishing these bonds shall have a solid financial standing and a record of service satisfactory to the Owner and shall be authorized to do business in the State of Washington.

The Attorney-in-fact (resident agent) who executes this "Performance Bond" and "Payment Bond", in behalf of the surety company must attach a copy of his/her power-of-attorney as evidence of his/her authority. A notary shall acknowledge the power as of the date of the execution of the surety bond which it covers.

CONTRACT DOCUMENTS TO SUCCESSFUL BIDDER:

The successful Bidder will be issued three (3) sets of Contract Documents, including three (3) sets of full-size Drawings at no extra cost. Additional copies may be purchased for the cost of reproduction.

INCREASED OR DECREASED QUANTITIES:

Payment to the Contractor will be made only for the actual quantities of work performed and accepted in conformance with the Contract. When the accepted quantities of work vary from the original bid quantities, payment will be at the unit contract prices for accepted work unless the total quantity of any contract item, using the original bid quantity, increases or decreases by more than 25 percent. In that case that part of the increase or decrease exceeding 25 percent will be adjusted in accordance with Section 1-04.6 of the Specifications.

Written consent of the surety or sureties will be required for any changed work that results in an increase in Contract Price.

MOBILIZATION:

The Bidder's attention is directed to the WSDOT Standard Spec 1-09.7 which for this project has been adopted by the Tribe.

PART 3

BID PACKAGE

BID PROPOSAL

To: Confederated Tribes of the Chehalis Reservation
Wastewater Collection System and WWTF Upgrades Project

Address: 420 Howanut Road
Oakville, WA. 98568
ATTN: Planning, Brian von Clück

Project: Wastewater Collection System and WWTF Upgrades Project

Bidder: _____

Date: _____

WA Contractor's License No.:_____

Contractor's DUNS Number: _____

BIDDER'S DECLARATION AND UNDERSTANDING

The undersigned, hereinafter called the Bidder, declares that the only persons or parties interested in this Proposal are those named herein, that this Proposal is, in all aspects, fair and without fraud, that it is made without collusion with any official of the Owner and that the Proposal is made without any connection or collusion with any person submitting another Proposal on this Contract.

The Bidder further declares that he/she has carefully examined the Contract Documents for the construction of the project, has personally inspected the site, has satisfied itself as to the quantities involved, including materials and equipment, and conditions of work involved, including the fact that the description of the quantities of work and materials, as included herein, is brief and is intended only to indicate the general nature of the work and to identify the said quantities with the detailed requirements of the Contract Documents, and that this Proposal is made according to the provisions and under the terms of the Contract Documents, which Documents are hereby made a part of this Proposal Form.

The submission of this Proposal Form shall be conclusive evidence that the Bidder has investigated the availability of all equipment and materials required for the work specified and is satisfied that deliveries of equipment and materials can be scheduled to complete the work in all respects within the completion time specified herein.

The Bidder further agrees that he/she has exercised his/her own judgment regarding the interpretation of subsurface information and has utilized all data, which he/she believes pertinent from the Engineer, Owner, and other sources in arriving at his/her conclusions.

The Bidder further certifies that he/she has exercised all options available to him/her toward reaching the goals for minority business enterprise utilization specified in these Documents.

This project is funded through the Washington State Drinking Water State Revolving Fund with federal funds from the Environmental Protection Agency. All work performed will be subject to the higher of prevailing State or federal Davis-Bacon wage rates. Award of the construction contract is contingent upon approval by the funding agency.

CONTRACT EXECUTION AND BONDS

The Bidder agrees that if this Proposal is accepted, he/she will, within ten (10) calendar days after the Notice of Award date, sign the Agreement in the form annexed hereto, and will at that time, deliver to the Owner the Performance Bond and Payment Bond required herein, and will, to the extent of its Proposal, furnish all machinery, tools, apparatus, and other means of construction and do the work and furnish all the materials necessary to complete the work in the manner, in the time, and according to the methods as specified in the Contract Documents and required by the Engineer thereunder.

CERTIFICATES OF INSURANCE

The Bidder further agrees to furnish the Owner, with the fully executed Contract, the certificates of insurance as specified in these Documents.

START OF CONSTRUCTION AND CONTRACT TIME

The Bidder further agrees to begin work within five (5) working days after the date of the Notice to Proceed. Contract Time shall begin on the 5th working day following the Notice to Proceed, or when the Contractor begins construction activities, whichever is earliest.

The Bidder further agrees to complete the work within the specified Contract Time of One hundred, eighty (180) working days. Working days are defined in WSDOT Standard Spec 1-08.5.

LIQUIDATED DAMAGES

In the event the Bidder is awarded the Contract and shall fail to complete the work within the time limit or extended time limit agreed upon, as more particularly set forth in the Contract Documents, liquidated damages shall be paid to the Owner according to the Special Provisions until the work shall have been finished as provided by the Contract Documents. Saturdays, Sundays and legal holidays shall be excluded in determining days in default.

ADDENDA

The Bidder hereby acknowledges that he/she has received Addenda Numbers

_____, _____, _____, _____,

(Bidder Insert No. of each Addendum received) to these Contract Documents.

LUMP SUM OR UNIT PRICE WORK

The Bidder further proposes to accept as full payment for the work proposed herein the amounts computed under the provisions of the Contract Documents and based on the following lump sum or unit price amounts, it being expressly understood that the unit prices are independent of the exact quantities involved. The Bidder agrees that the lump sum prices and the unit prices represent a true measure of the labor and materials required to perform the work, including all allowances for overhead and profit for each type and unit of work called for in these Contract Documents. Payment for items of work shown in the Contract Documents and not designated as an item of the Proposal Form shall be considered incidental and separate payment will not be made.

Confederated Tribes of the Chehalis Reservation
Wastewater Collection System and WWTF Upgrades Project

BASE BID SCHEDULE

BID ITEM NO.	DESCRIPTION OF ITEM	ESTIMATED QUANTITY	UNIT PRICE	TOTAL AMOUNT
1-04.4.1	Minor Changes – Community System By Calculations	Calculation	**Not Applicable**	$25,000
1.04.4.2	Minor Changes – WWTF By Calculations	Calculation	**Not Applicable**	$35,000
1-09.7	Mobilization Per Lump Sum	1 LS	**LUMP SUM**	$ _____
1-10.4	Project Temporary Traffic Control Per Lump Sum	1 LS	**LUMP SUM**	$ _____
2-01.5	Clearing and Grubbing Per Lump Sum	1 LS	**LUMP SUM**	$ _____
2-02.5	Pothole Utility Per Each	72 EA	$_____	$ _____
4-04.5	Crushed Surfacing Top Course – Shoulder Rock Per Cubic Yard	60 CY	$_____	$ _____
5-04.5.1	HMA Patching, CL ½, PG 64-28, 3" Depth, Per Square Yard	550 SY	$ _____	$ _____
7-08.5.1	Trench Excavation Safety System Per Linear Foot	6345 LF	$ _____	$ _____

BID ITEM NO.	DESCRIPTION OF ITEM	ESTIMATED QUANTITY	UNIT PRICE	TOTAL AMOUNT
7-08.5.2	Imported Trench Backfill Per Linear Foot	4100 LF	$ _____	$ _____
7-08.5.3	Imported Pipe Bedding Per Linear Foot	8050 LF	$ _____	$ _____
7-17.5.1	4-Inch PVC Force Main w/ Fittings Excavation & Backfill Per Linear Foot	2960 LF	$ _____	$ _____
7-17.5.2	4-Inch PVC Force Main/Dual Wall w/ Fittings Excavation & Backfill Per Linear Foot	1635 LF	$ _____	$ _____
7-17.5.3	3-Inch PVC Force Main w/ Fittings Excavation & Backfill. Per Linear Foot	680 LF	$ _____	$ _____
7-17.5.4	2-Inch PVC Force Main w/ Fittings Excavation & Backfill Per Linear Foot	1670 LF	$ _____	$ _____
7-17.5.5	1-1/4-Inch PVC Force Main w/ Fittings Excavation & Backfill Per Linear Foot	1160 LF	$ _____	$ _____
7-17.5.6	1-1/4” Service Connection to Force Main Per Each	10 EA	$ _____	$ _____
7-17.5.7	2 Inch Force Main Valve. Per Each	2 EA	$ _____	$ _____
7-17.5.8	Isolation Valve 4 In. Per Each	6 EA	$ _____	$ _____

BID ITEM NO.	DESCRIPTION OF ITEM	ESTIMATED QUANTITY	UNIT PRICE	TOTAL AMOUNT
7-17.5.7	1" Air / Vac. Release Valve & Vault Per Each	1 EA	$ _____	$ _____
7-17.5.8	In-Line Pig Port/Cleanout Per Each	7 EA	$ _____	$ _____
8-01.5	Erosion and Sediment Control Per Lump Sum	1 LS	**LUMP SUM**	$ _____
8-02.5	Surface Restoration – Seeding, Top Soil Per Lump Sum	1 LS	**LUMP SUM**	$ _____
33 32 19.4	Simplex Pump Station Per Each	10 EA	$ _____	$ _____
33 32 20.4	Tahown Pump Station Per Lump Sum	1 LS	**LUMP SUM**	$ _____
44 42 00 Plan Sheet 24	Wellness Center Pump Station Per Lump Sum	1 LS	**LUMP SUM**	$ _____
02 41 19.4 Plan Sheet 25	Decommission Wellness Center MBR Per Lump Sum	1 LS	**LUMP SUM**	$ _____
Plan Sheets 29-33	WWTF Improvements Per Lump Sum	1 LS	**LUMP SUM**	$ _____
		TOTAL BASE BID	$_____	

ADDITIVE ALTERNATE A BID SCHEDULE

BID ITEM NO.	DESCRIPTION OF ITEM	ESTIMATED QUANTITY	UNIT PRICE	TOTAL AMOUNT
09 96 1.5.1 Plan Sheets 26 and 41	Pump Station #2 Rehabilitation w/ Refurbished Interior Controls & Misc. Per Lump Sum	1 LS	**LUMP SUM**	$ _____
			TOTAL ADDITIVE ALTERNATE A BID	$_____
			TOTAL ADDITIVE ALTERNATE A + BASE BID	$_____

ADDITIVE ALTERNATE B BID SCHEDULE

BID ITEM NO.	DESCRIPTION OF ITEM	ESTIMATED QUANTITY	UNIT PRICE	TOTAL AMOUNT
01 12 01 09 96 1.5.2 Plan Sheet 30	Rehabilitate Anoxic Tanks #1 & #2 Per Lump Sum	1 LS	**LUMP SUM**	$ _____
			TOTAL ADDITIVE ALTERNATE B BID	$_____
			TOTAL ADDITIVE ALTERNATE B + BASE BID	$_____
TOTAL ADDITIVE ALTERNATE A + ADDITIVE ALTERNATE B + BASE BID				$_____

CHANGES IN QUANTITIES

The Owner reserves the right to increase or diminish the amount of any class of work that may be deemed necessary.

SURETY:
If the Bidder is awarded a Contract on this Proposal, the surety who provides the "Performance Bond" will be

_____

whose address is _____
Street City State Zip

BIDDER:
The name of the Bidder submitting this Proposal is_____

whose address is _____
Street City State Zip

which is the address to which all communications concerned with this Proposal and with the Contract shall be sent.

The names of the principal officers of the corporation submitting this Proposal, or of the partnership, or of all persons interested in this Proposal as principal are as follows:

_____ _____

IF SOLE PROPRIETOR OR PARTNERSHIP

In witness whereof the undersigned has caused this instrument to be executed on this _____day of _____, 2021.

_____	_____	_____
Signature of Bidder	Signature of Bidder	Signature of Bidder
_____	_____	_____
Title	Title	Title

IF LIMITED LIABILITY COMPANY

In witness hereto and undersigned has set his (its) hand this _____ day of _____, 2021.

_____
Signature of Bidder

_____
Title

IF CORPORATION

In witness whereof the undersigned corporation has caused this instrument to be executed by its duly authorized officer this _____ day of _____, 2021.
(SEAL)

_____
Name of Corporation

By _____

Title _____

Attest _____
Secretary

MINIMUM WAGE COMPLIANCE

The undersigned Bidder hereby certifies that, within the three-year period immediately preceding the bid solicitation date for this Project, the bidder is not a "willful" violator, as defined in RCW 49.48.082, of any provision of chapters 49.46, 49.48, or 49.52 RCW, as determined by a final and binding citation and notice of assessment issued by the Department of Labor and Industries or through a civil judgment entered by a court of limited or general jurisdiction.

OFFICIAL AUTHORIZED TO SIGN FOR BIDDER	
"I certify (or declare) under penalty of perjury under the laws of the State of Washington that the foregoing is true and correct".	
Signature:	Date:
Print Name and Title:	Location or Place Executed (City, State):

SUBCONTRACTOR LIST

Prepared in compliance with RCW 39.30.060 as amended
To Be Submitted with the Bid Proposal
Project Name: Confederated Tribes of the Chehalis Reservation – Wastewater Collection System and WWTF Upgrades Project

All bidders shall submit the following information for all firms that bid or quote on subcontracts (including both DBE and non-DBE firms) as part of the bid, or within one hour after the published bid submittal time (consistent with RCW 39.30.060).

1. Firm's name with point of contact;
2. Firm's mailing address, telephone number, and e-mail address;
3. The work on which the firm bid or quoted, and when the firm bid or quoted; and
4. Firm's status as an MBE/WBE or non-MBE/WBE.

Failure to list subcontractors who are proposed to perform the work of heating, ventilation, air conditioning; plumbing as described in Chapter 18.106 RCW; and electrical as described in Chapter 19.28 RCW, or to name itself for the work, within one hour after the published bid submittal time, will result in your bid being non-responsive and therefore void.

Subcontractor(s) that are proposed to perform the work of heating, ventilation, air conditioning; plumbing as described in Chapter 18.106 RCW; and electrical as described in Chapter 19.28 RCW, or to name itself for the work, must be listed below. The work to be performed is to be listed below the subcontractor(s) name.

SUBCONTRACTOR LIST

Subcontractor Name	Address	Phone / email	Work Bid Date Bid	MBE/WBE Yes/No
			HEATING Date Bid:	
			VENTILATION Date Bid:	
			AIR CONDITIONING Date Bid:	

SUBCONTRACTOR LIST (Continued)

Subcontractor Name	Address	Phone / email	Work Bid Date Bid	MBE/WBE Yes/No
			PLUMBING Date Bid:	
			ELECTRICAL Date Bid:	

PROPOSAL CHANGE REQUEST FORM

Project Name: Confederated Tribes of the Chehalis Reservation – Wastewater Collection System and WWTF Upgrades Project

Bidder: _____

Date: _____, Time Submitted: _____

Description of Change Requested:

_____

_____

_____

_____

_____

_____

_____

List of Attachments:

_____

_____

_____

_____

_____

ALL PROPOSAL CHANGE REQUESTS MUST BE RECEIVE IN ACCORDANCE WITH SECTION 1-02.10 OF THE CONTRACT DOCUMENTS PRIOR TO THE TIME ESTABLISHED FOR RECEIVING THE BIDS IN THE ADVERTISEMENT FOR BIDS.

ATTACHMENT 3

CERTIFICATION OF NONSEGREGATED FACILITIES

(Applicable to federally assisted construction contracts and related subcontracts exceeding $10,000 which are not exempt from the Equal Opportunity clause.)

The federally assisted construction contractor certifies that he does not maintain or provide for his employees any segregated facilities at any of his establishments, and that he does not permit his employees to perform their services at any location, under his control, where segregated facilities are maintained. The federally assisted construction contractor certified, further that he will not maintain or provide for his employees any segregated facilities at any of his establishments, and that he will not permit his employees to perform their services at any location, under his control, where segregated facilities are maintained. The federally assisted construction contractor agrees that a breach of this certification is a violation of the Equal Opportunity clause in this contract.

As used in this certification, the term "segregated facilities" means any waiting rooms, work area, rest rooms and wash rooms, restaurants and other eating areas, time clocks, locker rooms and other storage or dressing areas, parking lots, drinking fountains, recreation or entertainment areas, transportation, and housing facilities provided for employees which are segregated by explicit directive or area, in fact, segregated on the basis of race, creed, color, or national origin, because of habit, local custom, or otherwise. The federally assisted construction contractor agrees that (except where he has obtained identical certifications from proposed contractors for specific time periods) he will obtain identical certifications from proposed subcontractors prior to the award of subcontracts exceeding $10,000 which are not exempt from the provisions of the Equal Opportunity clause, and that he will retain such, certification in this file.

_____ _____

Signature Date

_____

Name and title of signer (please type)

[THIS FORM SHALL BE COMPLETED IN FULL AND SUBMITTED WITH THE BID PROPOSAL]

Disadvantaged Business Enterprise (DBE) Program
DBE Subcontractor Performance Form

This form is intended to capture the DBE[1] subcontractor's[2] description of work to be performed and the price of the work submitted to the prime contractor. An EPA Financial Assistance Agreement Recipient must require its prime contractor to have its DBE subcontractors complete this form and include all completed forms in the prime contractors bid or proposal package.

Subcontractor Name Click here to enter text.	Project Name Click here to enter text.	
Bid/ Proposal No. Click here to enter text.	Assistance Agreement ID No. (if known) Click here to enter text.	Point of Contact Click here to enter text.
Address Click here to enter text.		
Telephone No. Click here to enter text.	Email Address Click here to enter text.	
Prime Contractor Name Click here to enter text.	Issuing/Funding Entity **Department of Ecology**	

Contract Item Number	**Description of Work Submitted to the Prime Contractor Involving Construction, Services, Equipment, or Supplies**	**Price of Work Submitted to the Prime Contractor**
Click here to enter text.	Click here to enter text.	Click here to enter text.
DBE Certified By: ☐DOT ☐ SBA ☐ Other: Click here to enter text.	Meets/ exceeds EPA certification standards? ☐ YES ☐ NO ☐ Unknown	

[1] A DBE is a Disadvantaged, Minority, or Woman Business Enterprise that has been certified by an entity from which EPA accepts certifications as described in 40 CFR 33.204-33.205 or certified by EPA. EPA accepts certifications from entities that meet or exceed EPA certification standards as described in 40 CFR 33.202.

[2] Subcontractor is defined as a company, firm, joint venture, or individual who enters into an agreement with a contractor to provide services pursuant to an EPA award of financial assistance.

Disadvantaged Business Enterprise (DBE) Program
DBE Subcontractor Performance Form

I certify under penalty of perjury that the forgoing statements are true and correct. Signing this form does not signify a commitment to utilize the subcontractors above. I am aware of that in the event of a replacement of a subcontractor, I will adhere to the replacement requirements set forth in 40 CFR Part 33 Section 33.302 (c).

Prime Contractor Signature	Print Name
Title	**Date**
Click here to enter text.	Click here to enter text.

Subcontractor Signature	Print Name
Title	**Date**
Click here to enter text.	Click here to enter text.

Disadvantaged Business Enterprise (DBE) Program
DBE Subcontractor Utilization Form

This form is intended to capture the prime contractor's actual and/or anticipated use of identified certified DBE[1] subcontractors[2] and the estimated dollar amount of each subcontract. An EPA Financial Assistance Agreement Recipient must require its prime contractors to complete this form and include it in the bid or proposal package. Prime contractors should also maintain a copy of this form on file.

Prime Contractor Name Click here to enter text.	Project Name Click here to enter text.	
Bid/ Proposal No. Click here to enter text.	Assistance Agreement ID No. (if known) Click here to enter text.	Point of Contact Click here to enter text.
Address Click here to enter text.		
Telephone No. Click here to enter text.	Email Address Click here to enter text.	
Issuing/Funding Entity **Department of Ecology**		

I have identified potential DBE certified subcontractors ☐ YES ☐ NO			
If yes, please complete the table below. If no, please explain: Click here to enter text.			
Subcontractor Name/ Company Name	**Company Address/ Phone/ Email**	**Estimated Dollar Amount**	**Currently DBE Certified?**
Click here to enter text.	Click here to enter text.	Click here to enter text.	Click here to enter text.
Click here to enter text.	Click here to enter text.	Click here to enter text.	Click here to enter text.
Click here to enter text.	Click here to enter text.	Click here to enter text.	Click here to enter text.

Add more lines if needed

[1] A DBE is a Disadvantaged, Minority, or Woman Business Enterprise that has been certified by an entity from which EPA accepts certifications as described in 40 CFR 33.204-33.205 or certified by EPA. EPA accepts certifications from entities that meet or exceed EPA certification standards as described in 40 CFR 33.202.

[2] Subcontractor is defined as a company, firm, joint venture, or individual who enters into an agreement with a contractor to provide services pursuant to an EPA award of financial assistance.

Disadvantaged Business Enterprise (DBE) Program
DBE Subcontractor Utilization Form

I certify under penalty of perjury that the forgoing statements are true and correct. Signing this form does not signify a commitment to utilize the subcontractors above. I am aware of that in the event of a replacement of a subcontractor, I will adhere to the replacement requirements set forth in 40 CFR Part 33 Section 33.302 (c).

Prime Contractor Signature	Print Name
Title	**Date**
Click here to enter text.	Click here to enter text.

ADDITIONAL INFORMATION TO BE SUBMITTED WITH BID

The Bidder's Proposal will be scored based on the criteria and points assigned for each criteria. The criteria, description of criteria, and the points available for each criteria is included below. The Bidder shall provide the following information in the Bid for the purpose of scoring:

- **Qualifications and Past Performance**
  - Qualification of Company to perform the work
  - Proposed Superintendent's tenure with Bidder and past experience completing similar projects.
  - Past similar contracts with Government and/or Tribal agencies.
  - List of 3 similar projects include:
    - Owner contact information
    - Project description
    - Total construction cost
- **Project Approach**
  - Narrative of Construction approach to this project.
  - Construction team organizational chart.
- **Project Schedule**
  - Gant chart of proposed construction schedule.
- **Indian Preference**
  - List of company owners that are members of federally recognized Tribes.
  - Documentation of proof of enrollment in federally recognized Indian Tribe
- **Cost**
  - Cost criteria will be based on Total Bid amount of Base Bid plus selective alternatives.

NOTE: The criteria and points assigned to each criteria that will be used to rank the bids is included in the Sample Contract Forms Section of these documents.

PART 4

SAMPLE
CONTRACT FORMS

WASTEWATER TREATMENT FACILITY UPGRADES AND NEW CONNECTIONS
Construction Project
April 2021

Reviewer Name _____

Firms Names _____

Scored Criteria	**Points Available**	**Score**
Professional Qualifications and Past Performances – Qualifications of the firm and staff to complete the work should include experience related to this project. Proposed superintendent's tenure with bidder and past experience and successes in completing similar projects. Past performance on similar contracts with Government and/or Tribal agencies, (3) comparable projects including project contact, project description and overall cost.	**15**	
Comments:		
Project Approach – This project includes various locations from the main MBR and Lagoons to the Public Safety MBR and decommissioning of the Public Safety MBR to private connections with controls, to multiple areas of staging. Bidder needs to show how they intend to approach the work and organize its team to successfully accomplish this project.	**10**	
Comments:		
Project Schedule – Provide a Gnat chart schedule that shows completion of all deliverables that includes coordinated work items and details all areas of the project (The more detail the better). The schedule shall assume an estimated Pre-con meeting date of May 24th 2021 giving the contractor 180 business days from Notice to proceed to complete the project.	**10**	
Comments:		

Indian Preference - Preference will be given to qualified applicants who are members of federally recognized tribes and have a significant stake in the company. To be considered for Indian preference, you must submit proof of enrollment in a federally recognized Indian Tribe. Documentation must be submitted to receive the five (5) points.	**5**	
Comments:		
Cost Proposal – Bid amount will be scored based on both the reasonableness of the proposed costs and thoroughness. Score on a sliding scale based on rank of individual bidders and range of variation in bid amount. Lowest Bidder gets max points each bid above should be separated by a difference of 10 points.	**60**	
Comments:		

NOTICE OF AWARD

To:_____

_____

_____

PROJECT: Confederated Tribes of the Chehalis Reservation – Wastewater Collection System and WWTF Upgrade Project.

The OWNER has considered the PROPOSAL submitted by you on _____, _____, 2021, for the above described WORK in response to its Request for Bids.

You are hereby notified that your PROPOSAL has been accepted for items in the amount of $ _____.

You are required by the Instructions To Bidders to execute the Agreement and furnish the required CONTRACTOR'S Performance BOND, Payment BOND and Certificates of Insurance within ten (10) calendar days from the date of this Notice to you.

If you fail to execute said Agreement and to furnish said BONDS and CERTIFICATES within ten (10) calendar days from the date of this Notice, said OWNER will be entitled to consider all your rights arising out of the OWNER'S acceptance of your PROPOSAL as abandoned and as a forfeiture of your BID BOND. The OWNER will be entitled to such other rights as may be granted by law.

You are required to return an acknowledged copy of this NOTICE OF AWARD to the OWNER.

Dated this _____ day of _____, 2021.

Confederated Tribes of the Chehalis Reservation

By _____

Title _____

ACCEPTANCE OF NOTICE

Receipt of the above NOTICE OF AWARD is hereby acknowledged

By _____

this the _____ day of _____, 2021.

By _____

Title _____

PERFORMANCE BOND

KNOW ALL PERSONS BY THESE PRESENTS, That _____, as PRINCIPAL, and _____, a corporation duly authorized to act as a surety company in the State of Washington as SURETY, are jointly and severally held and bound unto the Confederated Tribes of the Chehalis Reservation as Obligee, hereinafter called OWNER, in the sum of

_____dollars and

_____ cents, ($_____), for the payment of which we jointly and severally bind ourselves, our heirs, successors, administrators and assigns, or our successors and assigns, firmly by these presents.

THE CONDITION OF THIS OBLIGATION IS SUCH THAT:

WHEREAS, the PRINCIPAL herein has made and entered into a certain contract with the OWNER, a copy of which is attached hereto, which contract is by this reference made a part hereof, whereby the said PRINCIPAL agrees to perform certain work and to furnish certain materials and to assume obligations, all in accordance with the terms, conditions, requirements, drawings, and specifications set out in said contract, and

NOW THEREFORE, if the PRINCIPAL herein shall faithfully and truly observe and comply with the terms, conditions, and provisions of said contract, in all respects, and shall well and truly and fully do and perform all matters and things by him/her undertaken to be performed under said Contract, upon the terms set forth therein and within the time prescribed therein or as extended as provided therein, and shall in all respects perform said Contract according to law, then this obligation shall be void, otherwise to remain in full force and effect.

For value received, the SURETY hereby agrees that no change, extension of time, alteration or addition to the terms of the Contract or the work to be performed thereunder, or the specifications accompanying the same shall in any way affect its obligations hereunder, and the SURETY expressly waives notice of any such change, extension, alteration, or addition.

Nonpayment of the bond premium will not invalidate this bond nor shall the OWNER be obligated for the payment thereof.

Nothing herein constitutes a waiver of the Tribe's sovereign immunity nor will the Tribe waive that immunity under any circumstance.

In Witness Whereof, the parties hereto have caused this Bond to be executed in
This_____day of_____ , 2021.

PRINCIPAL:

By _____

Title: _____

Attest:_____

_____
Secretary

SURETY:

By _____
Attorney-in-fact

The Attorney-in-fact, who executes this bond in behalf of the surety company, must attach a copy of his/her power-of-attorney as evidence of his/her authority.

To each executed original of this bond there must be attached a complete set of the "Contract Documents", as the term is defined in the Instructions to Bidders with all corrections, interlineations, signatures, etc., completely reproduced therein.

PAYMENT BOND

Bond Number_____

KNOW ALL PERSONS BY THESE PRESENTS, That _____, as PRINCIPAL, hereinafter called PRINCIPAL, and _____, a corporation organized and existing under the laws of the State of Washington as SURETY, hereinafter called SURETY, are held and firmly bound unto the Confederated Tribes of the Chehalis Reservation as OBLIGEE, hereinafter called OWNER, for the use and benefit of claimants as herein below defined, in the amount of _____dollars and _____ cents ($ _____), for the payment whereof PRINCIPAL and SURETY bind themselves, their heirs, executor, administrators, successors and assigns, jointly and severally, firmly by these presents.

WHEREAS, PRINCIPAL has written agreement dated _____, 2021, entered into a contract with OWNER for WW Collection System/WWTF Upgrades in accordance with drawings and specifications prepared by Century West Engineering Corporation, which contract is by reference made a part hereof, and is hereinafter referred to as the Contract.

NOW, THEREFORE, THE CONDITION OF THIS OBLIGATION is such that the PRINCIPAL shall promptly make payment to all claimants as hereinafter defined, for all labor and material used or reasonably required for use in the performance of the contract, then his obligation shall be void; otherwise, it shall remain in full force and effect, subject, however, to the following conditions:

(1) A claimant is defined as one having a direct contract with the principal or with the subcontractor of the principal for labor, material, or both, used or reasonably required for use in the performance of the contract, labor and material being construed to include that part of water, gas power, light, heat, oil, gasoline, telephone service or rental of equipment directly applicable to the contract.

(2) The above named principal and surety hereby jointly and severally agree with the owner that every claimant as herein defined, who has not been paid in full before the expiration of a period of ninety (90) days after the date of which the last of such claimant's work or labor was done or performed, or materials were furnished by such claimant, may sue on this bond for use of such claimant, prosecute the suit to final judgment for such sum or sums as may be justly due claimant, and have execution thereon. The owner shall not be liable for the payment of any costs or expenses of any such suit.

(3) No suit or action shall be commenced hereunder by any claimant.

(A) Unless claimant, other than one having a direct contract with the principal, shall

have given written notice to any two of the following: the principal, the owner, or the surety above named, within ninety (90) days after such claimant did or performed the last of the work or labor, or furnished the last of the materials for which said claim is made, stating with substantial accuracy the amount claimed and the name of the party to whom the materials were furnished, or for whom the work or labor was done or performed. Such notice shall be served by mailing the same by registered mail or certified mail, postage prepaid, in an envelope addressed to the principal, owner or surety, at any place where an office is regularly maintained for the transaction of business, or served in any manner in which legal process may be served in the State of Washington save that such service need not be made by a public offer.

(B) After the expiration of one (1) year following the date on which principal ceased work on said contract, it being understood, however, that if any limitation shall be deemed to be amended so as to be equal to the minimum period of limitation permitted by such law.

(C) Other than in a state court of competent jurisdiction in and for the County or other political subdivision of the state in which the project, or any part thereof, is situated, or in the United States District court for the district in which the project, or any part thereof, is situated, and not elsewhere.

(4) The amount of this bond shall be reduced by and to the extent of any payment or payments made in good faith hereunder, inclusive of the payment by surety of mechanics' liens which may be filed of record against said improvement, whether or not claim for the amount of such lien be presented under and against this bond.

Nothing herein constitutes a waiver of the Tribe's sovereign immunity nor will the Tribe waive that immunity under any circumstance.

_____ _____

Witness

(Seal) By _____

(Seal) By_____

Confederated Tribes of the Chehalis Reservation

CONSTRUCTION CONTRACT

This Contract is made on the 20th day of October 2015, by and between the **Confederated Tribes of the Chehalis Reservation**, hereinafter referred to as "Tribe" and (Insert name of company)**,** (Type of contractor), hereinafter referred to as "Contractor." This Contract is made for work to be performed for the benefit of the Tribe in order to make the necessary improvements to afford safe, healthy, and sound construction for the Tribe and in compliance with appropriate Tribal and federal provisions.

RECITALS

Contractor, in consideration of the sum indicated on the Contractor's Proposal, which by this reference is made a part hereof, and in consideration of the other covenants and agreements herein contained, agrees to perform and complete the work herein described:

1. A. Contractor shall accomplish all the work for this project as indicated in the attached Bid (Name of project), which is made a part hereof, which includes the project specifications and are also incorporated as part of this Contract.

   B. The Scope of Work covered by this Contract shall be completed by (Name of contractor).

   C. Excusable delays.
   Except with respect to failures of subcontractors, the Contractor shall not be considered to have failed in performance of this contract if such failure arises out of causes beyond the control and without the fault or negligence of the Contractor. Such cause may include, but are not restricted to, Acts of God or the public enemy, acts of the Government in either its sovereign or contractual capacity, acts of the owner, fires, floods, quarantine restrictions, strikes, freight embargoes, and unusually severe weather, but in every case failure to perform must be beyond the control and without the fault or negligence of the Contractor. If the failure to perform is caused by the failure of a subcontractor to perform, and if such failure arises out of the cause beyond the control of both the Contractor and subcontractor and without the fault or negligence of either of them, the contractor shall not be deemed to have failed in performance of the Contract, unless (a) the supplies or services to be furnished by the subcontractor were obtained from other supplies, and (b) the Contractor shall have failed to comply reasonably with such order. The Contractor shall within 10 days from beginning of such delay notify the Tribe in writing of the causes of the delay. The Tribe shall ascertain the facts and extent of such failure and, if determined that any failure to perform was occasioned by any one or more of the said cause, the delivery schedule shall be revised accordingly.

2. The Tribe shall make payments to the Contractor of a sum not to exceed the total amount of $_____. The Tribe shall make payments within 30 days after completion of the work, or

by a timeline agreed to by both parties and attached and made part of this Contract. The last payment will be made with the approval of work by the Tribal Business Committee. A 5% retainage fee shall be held until all parties, including the Tribal Building Inspector, accept the work as being complete including all punch list items. All warranties and lien waivers and project as-builts as specified must be received prior to final payment.

3. Amendments and work orders to this Contract shall only be made upon written amendments agreed to and executed by the parties.

4. Contractor shall obtain and maintain all required licenses or permits, and meet all requirements of the Tribe, State, and/or Federal laws as applicable for the successful completion of this project. Contractor will provide copies of his Contractor's License, Workers Compensation, Bonding and/or Insurance Certificate.

5. Contractor shall not enter into any subcontracts for any of the work scheduled under this Contract, or assign any right, interest or obligation under this Contract, without obtaining prior written approval of the Tribe.

6. Warranty.
   Contractor warrants that all materials used will be new and of good quality unless use of other materials is approved in writing by the Tribe, and that all work will be free of defects in workmanship, and that the work will conform to the conditions of this Contract and the standards in the industry. This warranty is for a period of 12 months following the date the work is approved by the Business Committee. Any warranty claim shall be submitted to Contractor in writing within the 12 month period.

7. Termination Conditions.
   In event of contract termination by any of the following provisions, the parties agree to make notification in writing of the reasons for termination and the effective date.
   A. Termination for Cause.
      The Tribe, by written notice of default (including breach of contract) to the Contractor may immediately terminate the whole or any part of this Contract if Contractor failed to perform in the manner called for by this Contract; or fails to provide the services within the time specified herein, or any of the other provisions of this Contract; or fails to pursue the work as to endanger performance of this Contract in accordance with its terms and fails to correct such failures.

   B. Termination for Bankruptcy or Insolvency.
      The Tribe may immediately terminate Contract if Contractor files and is involuntarily declared to be bankrupt or insolvent according to law, or if assignment of Contractor's property shall be made for the benefit of creditors. The Tribe may thereupon remove Contractor and his effects, if any, forcibly if necessary, without being deemed guilty of trespass and without prejudice to any remedy which otherwise might be used.

   C. Termination for convenience.
      This Contract may be terminated in whole or in part if the Tribe and Contractor agree that continuation of the project would not produce beneficial results commensurate with the further expenditure of funds. The parties will agree upon termination conditions,

including effective date, and in the case of partial termination, the portions to be terminated.

D. Termination in Event of Damaged or Destroyed Property.
This Contract may be terminated by Contractor if the property is substantially damaged or destroyed by fire, natural disaster or causes other than by deliberate acts or negligence by the Contractor.

8. The rights and remedies of the Tribe provided in Section 7 related to defaults by the Contractor shall not be exclusive and are in addition to any other rights or remedies provided by law or under this Contract.

9. Compensation in Event of Termination.
If Contract is terminated for reasons identified in Section 7 above, the Tribe will compensate the Contractor proportionately for the work that has been satisfactorily completed. The Tribe in accordance with generally accepted standards of the trade will make the determination of satisfactory work.

10. Contractor shall comply with the Copeland "Anti-Kickback" Act (18 USC § 847) as supplemented in Department of Labor Regulations, (29 CFR Part 3) and shall not induce by any means, any person employed by this project, to give up any part of the compensation to which they are otherwise entitled.

11. Contractor Continuously throughout the term of this Agreement, Contractor shall carry and maintain, at Contractor's expense, general liability, errors and omissions, automobile, property damage, and if applicable, workman's compensation insurance. Contractor must provide a Certificate of Insurance naming the Tribe as Additional Insured showing the following coverages:

Commercial General Liability Each Occurrence $1,000,000
General Aggregate $2,000,000
Products/Completed Operations Aggregate $2,000,000
Personal Advertising Injury $1,000,000
Damages to Rented Premises $50,000
Automobile Liability Including: $1,000,000
Any Auto
Hired & Non-Owned Autos
Workers' Compensation:
Statutory Worker's Compensation insurance as prescribed by applicable law as evidenced by a Certificate of Insurance from State of Washington Department of Labor and Industries during the period of this contract.
WA Stop Gap (Employers Liability)
Per Accident $1,000,000
Disease $1,000,000
Each Employee $1,000,000

12. Contractor shall furnish all necessary machinery, tools, apparatus, equipment, supplies, materials, and labor unless otherwise specified in the Contract documents.

13. It is expressly understood that the laws of the Tribe and where applicable Federal laws shall govern this Contract.

14. Any litigation necessary to enforce the obligations of either party under this Contract must be brought into the Tribal Court of the Tribe to the extent jurisdiction obtains. Both as to interpretation and performance, the tribal laws of the Tribe shall govern this Contract; in the absence of tribal law, federal law applies. Nothing in this Contract shall be deemed or construed as a waiver of the sovereign immunity of the Tribe or any of its subsidiaries, officers, directors, employees, or representatives.

15. Contractor shall promptly, as due, make payments of all debts, dues, demands and obligations incurred in the performance of this Contract and shall not permit any lien or claim to be filed or prosecuted against the Owner or the Tribe.

16. Contactor hereby agrees to indemnify and hold Tribe harmless from any and all claims, causes of action, losses, damages, and expenses, including attorney's fees, arising out of Contractor's performance of the work.

17. If any provision of this Contract is held invalid or unenforceable, such invalidity or unenforceability shall not affect the validity or enforceability of any other provision of this Contract.

18. Contractor must apply for and be issued a Tribal Business License in order to work within the exterior boundaries of the Chehalis Reservation. The fee for the license is $50.00.

19. For all tribally-owned projects, Contractor and all sub-contractors shall exercise Native Preference and Chehalis Tribal Preference, as described in the Chehalis Tribal Procurement Policies, in hiring staff or engaging subcontractors for the completion of the work. The Tribe's Planning Department shall assist Contractor in exercising this preference by providing copies of relevant policy sections and advising Contractor with regard to hiring or engagement of subcontractors at Contractor's request.

20. Contractor acknowledges that Washington State sales and excise taxes do not apply to the delivery of the goods and/or services described under this Contract to the Chehalis Tribe within the Tribe's jurisdiction, and shall not include any Washington or other State sales or excise tax in the fee charged for performing the work.

21. Contractor shall retain for not less than three years all financial and other records pertinent to this Contract and make such records available to agents of the Tribe and to agents of any federal agency identified by the Tribe or the Comptroller General of the United States, for the purpose of conducting an audit.

22. Nothing in this Contract shall be construed so as to create any relationship of joint venture, partnership, employer/employee, agency, landlord/tenant or any similar relationship between the parties. Contractor is solely responsible for compliance with any laws and regulations applicable to Contractor, and for payment of any self-employment or other taxes that may apply to Contractor's earnings resulting from performance of this Contract.

23. Contractor shall maintain and enforce adequate policies to ensure that all of Contractor's employees, representatives, agents and subcontractors maintain a drug and alcohol-free working environment while performing the work. The use of drugs or alcohol by Contractor or any of Contractor's employees, agents, or subcontractors while providing services under this Agreement, or the performance of services under this Agreement by such persons while under the influence of drugs or alcohol, shall constitute a material breach of this Agreement. In the event of such a breach, the Chehalis Tribe may terminate this Agreement immediately by giving verbal or written notice to Contractor or to Contractor's senior on-site agent or employee.

24. The Chehalis Tribe maintains the inherent authority to remove and exclude from the territory of the Chehalis Tribe, which includes the Chehalis Reservation and tribal trust lands, any person who is not an enrolled Chehalis tribal member and whose presence in the Tribe's territory may be injurious to the peace, health, or welfare of the Chehalis Tribe. Contractor shall maintain and enforce adequate internal policies and procedures to ensure that neither Contractor nor Contractor's employees, agents, or subcontractors who enter the Tribe's territory pursuant to this Agreement shall have been convicted of a criminal offense consisting of a "sex offense" requiring registration as a "sex offender," or of a "domestic violence offense," as those terms are defined or understood under the laws of the United States, Chehalis tribal law, or the law of any tribe or state. The presence of such a person in the Tribe's territory on Contractor's behalf under this Agreement shall constitute a material breach of this Agreement. In the event of such a breach, the Chehalis Tribe may terminate this Agreement immediately by giving verbal or written notice to Contractor or to Contractor's senior on-site agent or employee. The Chehalis Tribe reserves the right to confirm Contractor's compliance with this provision by conducting a criminal background check of Contractor and any of Contractor's employees, agents, or subcontractors who perform work within the territory of the Chehalis Tribe under this Agreement. Contractor shall comply in a timely manner with the Chehalis Tribe's reasonable request for the personal identifying information of Contractor or Contractor's employees, agents, or subcontractors for the limited purpose of performing a criminal background check to verify Contractor's compliance with this provision.

Confederated Tribes of the Chehalis Reservation

Signed: _____ Date: DATE
Amy Loudermilk, Director of Planning

Contractor

Signed: _____ Date: _____
Name:

NOTICE TO PROCEED

To: _____ Date:

_____

_____ Project: Confederated Tribes of the Chehalis Reservation – Wastewater Collection System and WWTF Upgrade Project

You are hereby notified to commence WORK in accordance with the Agreement dated _____.

Contract time will begin on _____ (*the 5th working day following this notice*) or on the first day of construction activity, whichever occurs first. You are to complete the WORK, in all respects, within _____ working days.

Confederated Tribes of the Chehalis Reservation

By _____

Title _____

ACCEPTANCE OF NOTICE

Receipt of the above NOTICE TO PROCEED is hereby acknowledged by

_____,

This, the _____ day of _____, 2021.

_____
Signature

_____
Title

PART 5

WASHINGTON STATE DOE SPECIFICATION INSERT

WASHINGTON STATE DEPARTMENT OF ECOLOGY

WATER POLLUTION CONTROL REVOLVING FUND

SPECIFICATIONS INSERT

Revised 3/4/14

The following clauses will be incorporated into construction contracts receiving financial assistance from the Washington State Department of Ecology Water Pollution Control Revolving Fund. In the event of conflict within the contract these clauses shall take precedence

Required Bid Submittals

The following submittals are required to be submitted with the bid proposal:

- Certification Of Nonsegregated Facilities (attachment 3)
- DBE Subcontractor Utilization Form (EPA Form 6100-4)
- One copy of DBE Subcontractor Performance Form (EPA Form 6100-3) for each DBE subcontractor.
- Complete Bidders List.

Compliance with State and Local Laws

The Contractor shall assure compliance with all applicable federal, state, and local laws, requirements, and ordinances as they pertain to the design, implementation, and administration of the approved project.

State Interest Exclusion

It is anticipated that this project will be funded in part by the Washington State Department of Ecology . Neither the State Of Washington nor any of its departments or employees are, or shall be, a party to this contract or any subcontract.

Third Party Beneficiary

Partial funding of this project is being provided through the Washington State Department of Ecology Water Pollution Control Revolving Fund. All parties agree that the State of Washington shall be, and is hereby, named as an express third-party beneficiary of this contract, with full rights as such.

Access to the construction site and to records

The contractor shall provide for the safe access to the construction site and to the contractor's records by Washington State Department of Ecology and Environmental Protection Agency (EPA) personnel.

The Contractor shall maintain accurate records and accounts to facilitate the Owner's audit requirements and shall ensure that all subcontractors maintain auditable records.

These Project records shall be separate and distinct from the Contractor's other records and accounts.

All such records shall be available to the Owner and to Washington State Department of Ecology and EPA personnel for examination. All records pertinent to this project shall be retained by the Contractor for a period of three (3) years after the final audit.

Protection of the Environment

No construction related activity shall contribute to the degradation of the environment, allow material to enter surface or ground waters, or allow particulate emissions to the atmosphere, which exceed state or federal standards. Any actions that potentially allow a discharge to state waters must have prior approval of the Washington State Department of Ecology.

Funding Recognition

All site-specific projects must have a sign of sufficient size to be seen from nearby roadways acknowledging department financial assistance and left in place throughout the life of the project. Department logos must be on all signs and documents. Logos will be provided as needed.

Inadvertent Discovery Of Archeological Resources

The contractor shall obtain a copy of the Inadvertent Discovery Plan from the Project Owner. The contractor shall keep a copy of the inadvertent discovery plan for the project on the work site at all times. The contractor shall immediately stop all work if human remains, cultural, or archeological resources are discovered in the course of construction. The contractor shall follow the inadvertent discovery plan in dealing with the human remains, cultural, or archeological resources.

Use Of American Iron And Steel

This provision applies to projects for the construction, alteration, maintenance, or repair of a "treatment works" as defined in the Federal Water Pollution Control Act (33 USC 1381 et seq.). This provision does not apply if the engineering plans and specifications for the project were approved by the Ecology prior to January 17, 2014.

The Contractor acknowledges to and for the benefit of the Project Owner and the State of Washington that it understands the goods and services under this Agreement are being funded with monies made available by the Water Pollution Control Revolving Fund which contains provisions commonly known as "American Iron and Steel;" that requires all of the iron and steel products used in the project be produced in the United States ("American Iron and Steel Requirements") including iron and steel products provided by the Contactor pursuant to this Agreement. "Iron and Steel products" means the following products made primarily of iron or steel: lined or unlined pipes and fittings, manhole covers and other municipal castings, hydrants, tanks, flanges, pipe clamps and restraints, valves, structural steel, reinforced precast concrete, and construction materials.

The Contractor hereby represents and warrants to and for the benefit of the Project Owner and the State that:

(a) the Contractor has reviewed and understands the American Iron and Steel Requirements,

(b) all of the iron and steel products used in the project will be and/or have been produced in the United States in a manner that complies with the American Iron and Steel Requirements, unless a waiver of the requirements is approved, and

(c) the Contractor will provide any further verified information, certification or assurance of compliance with this paragraph, or information necessary to support a waiver of the American Iron and Steel Requirements, as may be requested by the Project Owner or the State.

Notwithstanding any other provision of this Agreement, any failure to comply with this paragraph by the Contractor shall permit the Project Owner or State to recover as damages against the Contractor any loss, expense or cost (including without limitation attorney's fees) incurred by the Project Owner or State resulting from any such failure (including without limitation any impairment or loss of funding, whether in whole or in part, from the State or any damages owed to the State by the Project Owner). While the Contractor has no direct contractual privity with the State, as a lender to the Project Owner for the funding of its project, the Project Owner and the Contractor agree that the State is a third-party beneficiary and neither this paragraph (nor any other provision of the Agreement necessary to give this paragraph force or effect shall be amended or waived without the prior written consent of the State.

Prevailing Wage

The work performed under this contract is subject to the wage requirements of the Davis-Bacon Act. The Contractor shall conform to the wage requirements prescribed by the federal Davis-Bacon and Relate Acts which requires that all laborers and mechanics employed by contractors and subcontractors performing on contracts funded in whole or in part by SRF appropriations in excess of $2000 pay their laborers and mechanics not less than the prevailing wage rates and fringe benefits, and determined by the Secretary of Labor, for corresponding classes of laborers and mechanics employed on similar projects in the area. Attachment 1 to this specification insert and an up to date wage determination shall be included in full into this contract and in any subcontract in excess of $2,000. Wage determinations can be found at http://www.wdol.gov.

The Contractor agrees that the Contractor is legally and financially responsible for compliance with the Davis-Bacon Act wage rules. All laborers and mechanics employed by contractors and subcontractors employed as part of this contract shall be paid wages at rates not less than those prevailing on projects of a character similar in the locality as determined by the Secretary of Labor in accordance with subchapter IV of chapter 31 of title 40, United States Code.

Certification Regarding Suspension, Debarment, Ineligibility Or Voluntary Exclusion

1. The CONTRACTOR, by signing this agreement, certifies that it is not suspended, debarred, proposed for debarment, declared ineligible or otherwise excluded from contracting with the federal government, or from receiving contracts paid for with federal

funds. If the CONTRACTOR is unable to certify to the statements contained in the certification, they must provide an explanation as to why they cannot.

2. The CONTRACTOR shall provide immediate written notice to the Department if at any time the CONTRACTOR learns that its certification was erroneous when submitted or had become erroneous by reason of changed circumstances.

3. The terms covered transaction, debarred, suspended, ineligible, lower tier covered transaction, participant, person, primary covered transaction, principal, proposal, and voluntarily excluded, as used in this clause, have the meaning set out in the Definitions and Coverage sections of rules implementing Executive Order 12549. You may contact the department for assistance in obtaining a copy of those regulations..

4. The CONTRACTOR agrees it shall not knowingly enter into any lower tier covered transaction with a person who is proposed for debarment under the applicable Code of Federal Regulations, debarred, suspended, declared ineligible, or voluntarily excluded from participation in this covered transaction.

5. The CONTRACTOR further agrees by signing this agreement, that it will include this clause titled "Certification Regarding Suspension, Debarment, Ineligibility Or Voluntary Exclusion" without modification in all lower tier covered transactions and in all solicitations for lower tier covered transactions.

6. Pursuant to 2CFR180.330, the CONTRACTOR is responsible for ensuring that any lower tier covered transaction complies with certification of suspension and debarment requirements.

7. CONTRACTOR acknowledges that failing to disclose the information required in the Code of Federal Regulations may result in the delay or negation of this funding agreement, or pursuance of legal remedies, including suspension and debarment.

8. CONTRACTOR agrees to keep proof in its agreement file, that it, and all lower tier recipients or contractors, are not suspended or debarred, and will make this proof available to the Department upon request. RECIPIENT/CONTRACTOR must run a search in http://www.sam.gov/ and print a copy of completed searches to document proof of compliance.

This term and condition supersedes EPA Form 5700-49, "Certification Regarding Debarment, Suspension, and Other Responsibility Matters."

Disadvantaged Business Enterprises

General Compliance (40 CFR Part 33).
The contractor shall comply with the requirements of the Environmental Protection Agency's Program for Participation By Disadvantaged Business Enterprises (DBE) 40 CFR Part 33.

Non-discrimination Provision (40CFR Appendix A to Part 33).
The contractor shall not discriminate on the basis of race, color, national origin or sex in the performance of this contract. The contractor shall carry out applicable requirements of 40 CFR part 33 in the award and administration of contracts awarded under EPA financial assistance agreements. Failure by the contractor to carry out these requirements is a material breach of this contract which may result in the termination of this contract or other legally available remedies.

The contractor shall comply with all federal and state nondiscrimination laws, including, but not limited to Title VI and VII of the Civil Rights Act of 1964, Section 504 of the Rehabilitation Act of 1973, Title IX of the Education Amendments of 1972, the Age Discrimination Act of 1975, and Chapter 49.60 RCW, Washington's Law Against Discrimination, and 42 U.S.C. 12101 et seq, the Americans with Disabilities Act (ADA).

Six Good Faith Efforts (40 CFR Part 33 Subpart C).
The contractor agrees to make the following good faith efforts whenever procuring subcontracts, equipment, services and supplies. The contractor shall retain records documenting compliance with the following six good faith efforts.

1. Ensuring Disadvantaged Business Enterprises are made aware of contracting opportunities to the fullest extent practicable through outreach and recruitment activities. For Indian Tribal, State and Local and Government recipients, this will include placing Disadvantaged Business Enterprises on solicitation lists and soliciting them whenever they are potential sources. Qualified Women and Minority business enterprises may be found on the Internet at www.omwbe.wa.gov or by contacting the Washington State Office of Minority and Women's Enterprises at (866) 208-1064.
2. Making information on forthcoming opportunities available to Disadvantaged Business Enterprises and arrange time frames for contracts and establish delivery schedules, where the requirements permit, in a way that encourages and facilitates participation by Disadvantaged Business Enterprises in the competitive process. This includes, whenever possible, posting solicitations for bids or proposals for a minimum of thirty (30) calendar days before the bid or proposal closing date.
3. Considering in the contracting process whether firms competing for large contracts could subcontract with Disadvantaged Business Enterprises. For Indian Tribal, State and local Government recipients, this will include dividing total requirements when economically feasible into smaller tasks or quantities to permit maximum participation by Disadvantaged Business Enterprises in the competitive process.
4. Encourage contracting with a consortium of Disadvantaged Business Enterprises when a contract is too large for one of these firms to handle individually.
5. Using services and assistance of the Small Business Administration and the Minority Business Development Agency of the Department of Commerce.
6. If the prime contractor awards subcontracts, requiring the subcontractors to take the six good faith efforts in paragraphs 1 through 5 above.

MBE/WBE Reporting (40 CFR Part 33 Parts 33.302, 33.502 and 33.503).

1. The contractor shall complete the DBE Subcontractor Utilization Form (EPA Form 6100–4).

2. The contractor shall require all DBE subcontractors to complete the DBE Subcontractor Performance Form (EPA Form 6100-3). The DBE Subcontractor Performance Form is only required to be completed by certified DBE subcontractors.
3. The contractor shall submit DBE Subcontractor Utilization Form (EPA Form 6100-4) and all completed DBE Subcontractor Performance Form(s) (EPA Form 6100-3) as part of the bid, or within one hour after the published bid submittal time (consistent with RCW 39.30.060)
4. The contractor shall provide DBE Subcontractor Participation Form (EPA Form 6100-2) to all DBE subcontractors. These subcontractors may submit Subcontractor Participation Form (EPA Form 6100-2) to the EPA Region 10 DBE coordinator in order to document issues or concerns with their usage or payment for a subcontract.

The 6100 forms can be found at:
http://www.ecy.wa.gov/programs/wq/funding/GrantLoanMgmtDocs/Eng/GrantLoanMgmtEngRes.html

Bidders List (40 CFR Part 33 part 33.501)
All bidders shall submit the following information for all firms that bid or quote on subcontracts (including both DBE and non-DBE firms) as part of the bid, or within one hour after the published bid submittal time (consistent with RCW 39.30.060).

1. Firm's name with point of contact;
2. Firm's mailing address, telephone number, and e-mail address;
3. The work on which the firm bid or quoted, and when the firm bid or quoted; and
4. Firm's status as an MBE/WBE or non-MBE/WBE.

Contract Administration Provisions (40 CFR part 33.302).
The contractor shall comply with the contract administration provisions of 40 CFR, Part33.302.

1. The contractor shall pay its subcontractor for satisfactory performance no more than 30 days from the contractor's receipt of payment.
2. The contractor shall notify the owner in writing prior to any termination of a DBE subcontractor.
3. If a DBE subcontractor fails to complete work under the subcontract for any reason, the contractor shall employ the six good faith efforts when soliciting a replacement subcontractor.
4. The contractor shall employ the six good faith efforts even if the contractor has achieved its fair share objectives.

Equal Opportunity (EEO)

If this Contract exceeds $10,000, the Contractor shall comply with Executive Order 11246, "Equal Employment Opportunity," as amended by Executive Order 11375, "Amending Executive Order 11246 Relating to Equal Employment Opportunity," and as supplemented by regulations at 41 CFR part 60.

Contractor's compliance with Executive Order 11246 shall be based on implementation of the Equal Opportunity Clause, and specific affirmative active obligations required by the Standard Federal Equal Employment Opportunity Construction Contract Specifications, as set forth in 41 CFR Part 60-4.

Equal Opportunity Clause (41 CFR part 60-1.4(b))
During the performance of this contract, the contractor agrees as follows:

1. The contractor will not discriminate against any employee or applicant for employment because of race, color, religion, sex, or national origin. The contractor will take affirmative action to ensure that applicants are employed, and that employees are treated during employment without regard to their race, color, religion, sex, or national origin. Such action shall include, but not be limited to the following: Employment, upgrading, demotion, or transfer; recruitment or recruitment advertising; layoff or termination; rates of pay or other forms of compensation; and selection for training, including apprenticeship. The contractor agrees to post in conspicuous places, available to employees and applicants for employment, notices to be provided setting forth the provisions of this nondiscrimination clause.
2. The contractor will, in all solicitations or advertisements for employees placed by or on behalf of the contractor, state that all qualified applicants will receive considerations for employment without regard to race, color, religion, sex, or national origin.
3. The contractor will send to each labor union or representative of workers with which he has a collective bargaining agreement or other contract or understanding, a notice to be provided advising the said labor union or workers' representatives of the contractor's commitments under this section, and shall post copies of the notice in conspicuous places available to employees and applicants for employment.
4. The contractor will comply with all provisions of Executive Order 11246 of September 24, 1965, and of the rules, regulations, and relevant orders of the Secretary of Labor.
5. The contractor will furnish all information and reports required by Executive Order 11246 of September 24, 1965, and by rules, regulations, and orders of the Secretary of Labor, or pursuant thereto, and will permit access to his books, records, and accounts by the administering agency and the Secretary of Labor for purposes of investigation to ascertain compliance with such rules, regulations, and orders.
6. In the event of the contractor's noncompliance with the nondiscrimination clauses of this contract or with any of the said rules, regulations, or orders, this contract may be canceled, terminated, or suspended in whole or in part and the contractor may be declared ineligible for further Government contracts or federally assisted construction contracts in accordance with procedures authorized in Executive Order 11246 of September 24, 1965, and such other sanctions may be imposed and remedies invoked as provided in Executive Order 11246 of September 24, 1965, or by rule, regulation, or order of the Secretary of Labor, or as otherwise provided by law.
7. The contractor will include the portion of the sentence immediately preceding paragraph (1) and the provisions of paragraphs (1) through (7) in every subcontract or purchase order unless exempted by rules, regulations, or orders of the Secretary of Labor issued pursuant to section 204 of Executive Order 11246 of September 24, 1965, so that such provisions will be binding upon each subcontractor or vendor. The contractor will take such action with respect to any subcontract or purchase order as the administering agency

may direct as a means of enforcing such provisions, including sanctions for noncompliance: Provided, however, That in the event a contractor becomes involved in, or is threatened with, litigation with a subcontractor or vendor as a result of such direction by the administering agency the contractor may request the United States to enter into such litigation to protect the interests of the United States.

Federal Equal Employment Opportunity Construction Contract Specifications
(Executive Order 11246 and 41 CFR part 60-4.3)

1. As used in these specifications:
   a. "Covered area" means the geographical area described in the solicitation from which this contract resulted;
   b. "Director" means Director, Office of Federal Contract Compliance Programs, United States Department of Labor, or any person to whom the Director delegates authority;
   c. "Employer identification number" means the Federal Social Security number used on the Employer's Quarterly Federal Tax Return, U.S. Treasury Department Form 941.
   d. "Minority" includes:
      i. Black (all persons having origins in any of the Black African racial groups not of Hispanic origin);
      ii. Hispanic (all persons of Mexican, Puerto Rican, Cuban, Central or South American or other Spanish Culture or origin, regardless of race);
      iii. Asian and Pacific Islander (all persons having origins in any of the original peoples of the Far East, Southeast Asia, the Indian Subcontinent, or the Pacific Islands); and
      iv. American Indian or Alaskan Native (all persons having origins in any of the original peoples of North America and maintaining identifiable tribal affiliations through membership and participation or community identification).
2. Whenever the Contractor, or any Subcontractor at any tier, subcontracts a portion of the work involving any construction trade, it shall physically include in each subcontract in excess of $10,000 the provisions of these specifications and the Notice which contains the applicable goals for minority and female participation and which is set forth in the solicitations from which this contract resulted.
3. If the Contractor is participating (pursuant to 41 CFR 60–4.5) in a Hometown Plan approved by the U.S. Department of Labor in the covered area either individually or through an association, its affirmative action obligations on all work in the Plan area (including goals and timetables) shall be in accordance with that Plan for those trades which have unions participating in the Plan. Contractors must be able to demonstrate their participation in and compliance with the provisions of any such Hometown Plan. Each Contractor or Subcontractor participating in an approved Plan is individually required to comply with its obligations under the EEO clause, and to make a good faith effort to achieve each goal under the Plan in each trade in which it has employees. The overall good faith performance by other Contractors or Subcontractors toward a goal in an approved Plan does not excuse any covered Contractor's or Subcontractor's failure to take good faith efforts to achieve the Plan goals and timetables.
4. The Contractor shall implement the specific affirmative action standards provided in paragraphs 7 a through p of these specifications. The goals set forth in the solicitation from which this contract resulted are expressed as percentages of the total hours of

employment and training of minority and female utilization the Contractor should reasonably be able to achieve in each construction trade in which it has employees in the covered area. Covered Construction contractors performing construction work in geographical areas where they do not have a Federal or federally assisted constuction contract shall apply the minority and female goals established for the geographical area where the work is being performed. Goals are published periodically in theFederal Registerin notice form, and such notices may be obtained from any Office of Federal Contract Compliance Programs office or from Federal procurement contracting officers. The Contractor is expected to make substantially uniform progress in meeting its goals in each craft during the period specified.

5. Neither the provisions of any collective bargaining agreement, nor the failure by a union with whom the Contractor has a collective bargaining agreement, to refer either minorities or women shall excuse the Contractor's obligations under these specifications, Executive Order 11246, or the regulations promulgated pursuant thereto.
6. In order for the nonworking training hours of apprentices and trainees to be counted in meeting the goals, such apprentices and trainees must be employed by the Contractor during the training period, and the Contractor must have made a commitment to employ the apprentices and trainees at the completion of their training, subject to the availability of employment opportunities. Trainees must be trained pursuant to training programs approved by the U.S. Department of Labor.
7. The Contractor shall take specific affirmative actions to ensure equal employment opportunity. The evaluation of the Contractor's compliance with these specifications shall be based upon its effort to achieve maximum results from its actions. The Contractor shall document these efforts fully, and shall implement affirmative action steps at least as extensive as the following:
    a. Ensure and maintain a working environment free of harassment, intimidation, and coercion at all sites, and in all facilities at which the Contractor's employees are assigned to work. The Contractor, where possible, will assign two or more women to each construction project. The Contractor shall specifically ensure that all foremen, superintendents, and other on-site supervisory personnel are aware of and carry out the Contractor's obligation to maintain such a working environment, with specific attention to minority or female individuals working at such sites or in such facilities.
    b. Establish and maintain a current list of minority and female recruitment sources, provide written notification to minority and female recruitment sources and to community organizations when the Contractor or its unions have employment opportunities available, and maintain a record of the organizations' responses.
    c. Maintain a current file of the names, addresses and telephone numbers of each minority and female off-the-street applicant and minority or female referral from a union, a recruitment source or community organization and of what action was taken with respect to each such individual. If such individual was sent to the union hiring hall for referral and was not referred back to the Contractor by the union or, if referred, not employed by the Contractor, this shall be documented in the file with the reason therefor, along with whatever additional actions the Contractor may have taken.
    d. Provide immediate written notification to the Director when the union or unions with which the Contractor has a collective bargaining agreement has not referred to the Contractor a minority person or woman sent by the Contractor, or when the

Contractor has other information that the union referral process has impeded the Contractor's efforts to meet its obligations.

e. Develop on-the-job training opportunities and/or participate in training programs for the area which expressly include minorities and women, including upgrading programs and apprenticeship and trainee programs relevant to the Contractor's employment needs, especially those programs funded or approved by the Department of Labor. The Contractor shall provide notice of these programs to the sources compiled under 7b above.
f. Disseminate the Contractor's EEO policy by providing notice of the policy to unions and training programs and requesting their cooperation in assisting the Contractor in meeting its EEO obligations; by including it in any policy manual and collective bargaining agreement; by publicizing it in the company newpaper, annual report, etc.; by specific review of the policy with all management personnel and with all minority and female employees at least once a year; and by posting the company EEO policy on bulletin boards accessible to all employees at each location where construction work is performed.
g. Review, at least annually, the company's EEO policy and affirmative action obligations under these specifications with all employees having any responsibility for hiring, assignment, layoff, termination or other employment decisions including specific review of these items with onsite supervisory personnel such as Superintendents, General Foremen, etc., prior to the initiation of construction work at any job site. A written record shall be made and maintained identifying the time and place of these meetings, persons attending, subject matter discussed, and disposition of the subject matter.
h. Disseminate the Contractor's EEO policy externally by including it in any advertising in the news media, specifically including minority and female news media, and providing written notification to and discussing the Contractor's EEO policy with other Contractors and Subcontractors with whom the Contractor does or anticipates doing business.
i. Direct its recruitment efforts, both oral and written, to minority, female and community organizations, to schools with minority and female students and to minority and female recruitment and training organizations serving the Contractor's recruitment area and employment needs. Not later than one month prior to the date for the acceptance of applications for apprenticeship or other training by any recruitment source, the Contractor shall send written notification to organizations such as the above, describing the openings, screening procedures, and tests to be used in the selection process.
j. Encourage present minority and female employees to recruit other minority persons and women and, where reasonable, provide after school, summer and vacation employment to minority and female youth both on the site and in other areas of a Contractor's work force.
k. Validate all tests and other selection requirements where there is an obligation to do so under 41 CFR part 60–3.
l. Conduct, at least annually, an inventory and evaluation at least of all minority and female personnel for promotional opportunities and encourage these employees to seek or to prepare for, through appropriate training, etc., such opportunities.
m. Ensure that seniority practices, job classifications, work assignments and other

personnel practices, do not have a discriminatory effect by continually monitoring all personnel and employment related activities to ensure that the EEO policy and the Contractor's obligations under these specifications are being carried out.

n. Ensure that all facilities and company activities are nonsegregated except that separate or single-user toilet and necessary changing facilities shall be provided to assure privacy between the sexes.

o. Document and maintain a record of all solicitations of offers for subcontracts from minority and female construction contractors and suppliers, including circulation of solicitations to minority and female contractor associations and other business associations.

p. Conduct a review, at least annually, of all supervisors' adherence to and performance under the Contractor's EEO policies and affirmative action obligations.

8. Contractors are encouraged to participate in voluntary associations which assist in fulfilling one or more of their affirmative action obligations (7a through p). The efforts of a contractor association, joint contractor-union, contractor-community, or other similar group of which the contractor is a member and participant, may be asserted as fulfilling any one or more of its obligations under 7a through p of these Specifications provided that the contractor actively participates in the group, makes every effort to assure that the group has a positive impact on the employment of minorities and women in the industry, ensures that the concrete benefits of the program are reflected in the Contractor's minority and female workforce participation, makes a good faith effort to meet its individual goals and timetables, and can provide access to documentation which demonstrates the effectiveness of actions taken on behalf of the Contractor. The obligation to comply, however, is the Contractor's and failure of such a group to fulfill an obligation shall not be a defense for the Contractor's noncompliance.

9. A single goal for minorities and a separate single goal for women have been established. The Contractor, however, is required to provide equal employment opportunity and to take affirmative action for all minority groups, both male and female, and all women, both minority and non-minority. Consequently, the Contractor may be in violation of the Executive Order if a particular group is employed in a substantially disparate manner (for example, even though the Contractor has achieved its goals for women generally, the Contractor may be in violation of the Executive Order if a specific minority group of women is underutilized).

10. The Contractor shall not use the goals and timetables or affirmative action standards to discriminate against any person because of race, color, religion, sex, or national origin.

11. The Contractor shall not enter into any Subcontract with any person or firm debarred from Government contracts pursuant to Executive Order 11246.

12. The Contractor shall carry out such sanctions and penalties for violation of these specifications and of the Equal Opportunity Clause, including suspension, termination and cancellation of existing subcontracts as may be imposed or ordered pursuant to Executive Order 11246, as amended, and its implementing regulations, by the Office of Federal Contract Compliance Programs. Any Contractor who fails to carry out such sanctions and penalties shall be in violation of these specifications and Executive Order 11246, as amended.

13. The Contractor, in fulfilling its obligations under these specifications, shall implement specific affirmative action steps, at least as extensive as those standards prescribed in paragraph 7 of these specifications, so as to achieve maximum results from its efforts to

ensure equal employment opportunity. If the Contractor fails to comply with the requirements of the Executive Order, the implementing regulations, or these specifications, the Director shall proceed in accordance with 41 CFR 60–4.8.

14. The Contractor shall designate a responsible official to monitor all employment related activity to ensure that the company EEO policy is being carried out, to submit reports relating to the provisions hereof as may be required by the Government and to keep records. Records shall at least include for each employee the name, address, telephone numbers, construction trade, union affiliation if any, employee identification number when assigned, social security number, race, sex, status (e.g., mechanic, apprentice trainee, helper, or laborer), dates of changes in status, hours worked per week in the indicated trade, rate of pay, and locations at which the work was performed. Records shall be maintained in an easily understandable and retrievable form; however, to the degree that existing records satisfy this requirement, contractors shall not be required to maintain separate records.
15. Nothing herein provided shall be construed as a limitation upon the application of other laws which establish different standards of compliance or upon the application of requirements for the hiring of local or other area residents (e.g., those under the Public Works Employment Act of 1977 and the Community Development Block Grant Program).

Reporting Requirements (EEO-1)

On or before September 30 of each year, a contractor that is subject to Title VII of the Civil Rights Act of 1964, as amended, and that has 100 or more employees, shall file with the EEOC or its delegate an "Employer Information Report EEO-1". Instructions on how to file are available on the EEOC's website at http://www.eeoc.gov/employers/eeo1survey/howtofile.cfm. The contractor shall retain a copy of the most recent report filed.

Segregated Facilities (41 CFR part 60-1.8)

The contractor shall ensure that facilities provided for employees are provided in such a manner that segregation on the basis of race, color, religion, sex or national origin cannot result. The contractor may neither require such segregated use by written or oral policies nor tolerate such use by employee custom. The contractor's obligation extends further to ensuring that its employees are not assigned to perform their services at any location, under the contractor's control, where the facilities are segregated. This obligation extends to all contracts containing the equal opportunity clause regardless of the amount of the contract. The term "facilities," as used in this section, means waiting rooms, work areas, restaurants and other eating areas, time clocks, restrooms, wash rooms, locker rooms, and other storage or dressing areas, parking lots, drinking fountains, recreation or entertainment areas, transportation, and housing provided for employees; Provided, That separate or single-user restrooms and necessary dressing or sleeping areas shall be provided to assure privacy between the sexes.

Attachments:

1. Wage Rate Requirements For Subrecipients
2. Current Wage Rate Determination (to be provided by project owner)
3. Certification Of Nonsegregated Facilities
4. Notice To Labor Unions Or Other Organization Of Workers: Non-Discrimination In

Employment

EPA Form 6100-4, EPA Form 6100.3, EPA Form 6100-2

ATTACHMENT 1 - WAGE RATE REQUIREMENTS FOR SUBRECIPIENTS. (To be included in full in any contract in excess of $2,000)

The following terms and conditions specify how recipients will assist EPA in meeting its Davis-Bacon (DB) responsibilities when DB applies to EPA awards of financial assistance under the FY 2013 Continuing Resolution with respect to State recipients and subrecipients that are governmental entities. If a subrecipient has questions regarding when DB applies, obtaining the correct DB wage determinations, DB provisions, or compliance monitoring, it may contact the State recipient. If a State recipient needs guidance, the recipient may contact Lorraine Fleury at fleury.lorraine@epa.gov or at 215-814-2341 of EPA, Region III Grants and Audit Management Branch for guidance. for guidance. The recipient or subrecipient may also obtain additional guidance from DOL's web site at http://www.dol.gov/whd/

1. **Applicability of the Davis- Bacon (DB) prevailing wage requirements**.

Under the FY 2013 Appropriations Act, DB prevailing wage requirements apply to the construction, alteration, and repair of treatment works carried out in whole or in part with assistance made available by a State water pollution control revolving fund and to any construction project carried out in whole or in part by assistance made available by a drinking water treatment revolving loan fund. If a subrecipient encounters a unique situation at a site that presents uncertainties regarding DB applicability, the subrecipient must discuss the situation with the recipient State before authorizing work on that site.

2. **Obtaining Wage Determinations**.

(a) Subrecipients shall obtain the wage determination for the locality in which a covered activity subject to DB will take place prior to issuing requests for bids, proposals, quotes or other methods for soliciting contracts (solicitation) for activities subject to DB. These wage determinations shall be incorporated into solicitations and any subsequent contracts. Prime contracts must contain a provision requiring that subcontractors follow the wage determination incorporated into the prime contract.

(i) While the solicitation remains open, the subrecipient shall monitor www.wdol.gov weekly to ensure that the wage determination contained in the solicitation remains current. The subrecipients shall amend the solicitation if DOL issues a modification more than 10 days prior to the closing date (i.e. bid opening) for the solicitation. If DOL modifies or supersedes the applicable wage determination less than 10 days prior to the closing date, the subrecipients may request a finding from the State recipient that there is not a reasonable time to notify interested contractors of the modification of the wage determination. The State recipient will provide a report of its findings to the subrecipient.

(ii) If the subrecipient does not award the contract within 90 days of the closure of the solicitation, any modifications or supersedes DOL makes to the wage determination contained in the solicitation shall be effective unless the State recipient, at the request of the subrecipient, obtains an extension of the 90 day period from DOL pursuant to 29 CFR 1.6(c)(3)(iv). The subrecipient shall monitor www.wdol.gov on a weekly basis if it does not award the contract within 90 days of closure of the solicitation to ensure that wage determinations contained in the solicitation remain current.

(b) If the subrecipient carries out activity subject to DB by issuing a task order, work assignment or similar instrument to an existing contractor (ordering instrument) rather than by publishing a solicitation, the subrecipient shall insert the appropriate DOL wage determination from www.wdol.gov into the ordering instrument.

(c) Subrecipients shall review all subcontracts subject to DB entered into by prime contractors to verify that the prime contractor has required its subcontractors to include the applicable wage determinations.

(d) As provided in 29 CFR 1.6(f), DOL may issue a revised wage determination applicable to a subrecipient's contract after the award of a contract or the issuance of an ordering instrument if DOL determines that the subrecipient has failed to incorporate a wage determination or has used a wage determination that clearly does not apply to the contract or ordering instrument. If this occurs, the subrecipient shall either terminate the contract or ordering instrument and issue a revised solicitation or ordering instrument or incorporate DOL's wage determination retroactive to the beginning of the contract or ordering instrument by change order. The subrecipient's contractor must be compensated for any increases in wages resulting from the use of DOL's revised wage determination.

3. Contract and Subcontract provisions.

(a) The Recipient shall insure that the subrecipient(s) shall insert in full in any contract in excess of $2,000 which is entered into for the actual construction, alteration and/or repair, including painting and decorating, of a treatment work under the CWSRF or a construction project under the DWSRF financed in whole or in part from Federal funds or in accordance with guarantees of a Federal agency or financed from funds obtained by pledge of any contract of a Federal agency to make a loan, grant or annual contribution (except where a different meaning is expressly indicated), and which is subject to the labor standards provisions of any of the acts listed in § 5.1 or the FY 2012 Appropriations Act , the following clauses:

(1) Minimum wages.

(i) All laborers and mechanics employed or working upon the site of the work will be paid unconditionally and not less often than once a week, and without subsequent deduction or rebate on any account (except such payroll deductions as are permitted by regulations issued by the Secretary of Labor under the Copeland Act (29 CFR part 3)), the full amount of wages and bona fide fringe benefits (or cash equivalents thereof) due at time of payment computed at rates not less than those contained in the wage determination of the Secretary of Labor which is attached hereto and made a part hereof, regardless of any contractual relationship which may be alleged to exist between the contractor and such laborers and mechanics.

Contributions made or costs reasonably anticipated for bona fide fringe benefits under section 1(b)(2) of the Davis-Bacon Act on behalf of laborers or mechanics are considered wages paid to such laborers or mechanics, subject to the provisions of paragraph (a)(1)(iv) of this section; also, regular contributions made or costs incurred for more than a weekly period (but not less often than quarterly) under plans, funds, or programs which cover the particular weekly period, are deemed to be constructively made or incurred during such weekly period. Such laborers and mechanics shall be paid the appropriate wage rate and fringe benefits on the wage determination for the classification of work actually performed, without regard to skill, except as provided in § 5.5(a)(4). Laborers or mechanics performing work in more than one classification may be compensated at the rate specified for each classification for the time actually worked therein: Provided that the employer's payroll records accurately set forth the time spent in each classification in which work is performed. The wage determination (including any additional classification and wage rates conformed under paragraph (a)(1)(ii) of this section) and the Davis-Bacon poster (WH-1321) shall be posted at all times by the contractor and its subcontractors at the site of the work in a prominent and accessible place where it can be easily seen by the workers.

Subrecipients may obtain wage determinations from the U.S. Department of Labor's web site, www.wdol.gov.

(ii)(A) The subrecipient(s), on behalf of EPA, shall require that any class of laborers or mechanics, including helpers, which is not listed in the wage determination and which is to be employed under the contract shall be classified in conformance with the wage determination. The State award official shall approve a request for an additional classification and wage rate and fringe benefits therefore only when the following criteria have been met:

(1) The work to be performed by the classification requested is not performed by a classification in the wage determination; and

(2) The classification is utilized in the area by the construction industry; and

(3) The proposed wage rate, including any bona fide fringe benefits, bears a reasonable relationship to the wage rates contained in the wage determination.

(B) If the contractor and the laborers and mechanics to be employed in the classification (if known), or their representatives, and the subrecipient(s) agree on the classification and wage rate (including the amount designated for fringe benefits where appropriate), documentation of the action taken and the request, including the local wage determination shall be sent by the subrecipient (s) to the State award official. The State award official will transmit the request, to the Administrator of the Wage and Hour Division, Employment Standards Administration, U.S. Department of Labor, Washington, DC 20210 and to the EPA DB Regional Coordinator concurrently. The Administrator, or an authorized representative, will approve, modify, or disapprove every additional classification request within 30 days of receipt and so advise the State award official or will notify the State award official within the 30-day period that additional time is necessary.

(C) In the event the contractor, the laborers or mechanics to be employed in the classification or their representatives, and the subrecipient(s) do not agree on the proposed classification and wage rate (including the amount designated for fringe benefits, where appropriate), the award official shall refer the request and the local wage determination, including the views of all interested parties and the recommendation of the State award official, to the Administrator for determination. The request shall be sent to the EPA DB Regional Coordinator concurrently. The Administrator, or an authorized representative, will issue a determination within 30 days of receipt of the request and so advise the contracting officer or will notify the contracting officer within the 30-day period that additional time is necessary.

(D) The wage rate (including fringe benefits where appropriate) determined pursuant to paragraphs (a)(1)(ii)(B) or (C) of this section, shall be paid to all workers performing work in the classification under this contract from the first day on which work is performed in the classification.

(iii) Whenever the minimum wage rate prescribed in the contract for a class of laborers or mechanics includes a fringe benefit which is not expressed as an hourly rate, the contractor shall either pay the benefit as stated in the wage determination or shall pay another bona fide fringe benefit or an hourly cash equivalent thereof.

(iv) If the contractor does not make payments to a trustee or other third person, the contractor may consider as part of the wages of any laborer or mechanic the amount of any costs reasonably

anticipated in providing bona fide fringe benefits under a plan or program, Provided, That the Secretary of Labor has found, upon the written request of the contractor, that the applicable standards of the Davis-Bacon Act have been met. The Secretary of Labor may require the contractor to set aside in a separate account assets for the meeting of obligations under the plan or program.

(2) Withholding. The subrecipient(s), shall upon written request of the EPA Award Official or an authorized representative of the Department of Labor, withhold or cause to be withheld from the contractor under this contract or any other Federal contract with the same prime contractor, or any other federally-assisted contract subject to Davis-Bacon prevailing wage requirements, which is held by the same prime contractor, so much of the accrued payments or advances as may be considered necessary to pay laborers and mechanics, including apprentices, trainees, and helpers, employed by the contractor or any subcontractor the full amount of wages required by the contract. In the event of failure to pay any laborer or mechanic, including any apprentice, trainee, or helper, employed or working on the site of the work, all or part of the wages required by the contract, the (Agency) may, after written notice to the contractor, sponsor, applicant, or owner, take such action as may be necessary to cause the suspension of any further payment, advance, or guarantee of funds until such violations have ceased.

(3) Payrolls and basic records.

(i) Payrolls and basic records relating thereto shall be maintained by the contractor during the course of the work and preserved for a period of three years thereafter for all laborers and mechanics working at the site of the work. Such records shall contain the name, address, and social security number of each such worker, his or her correct classification, hourly rates of wages paid (including rates of contributions or costs anticipated for bona fide fringe benefits or cash equivalents thereof of the types described in section 1(b)(2)(B) of the Davis-Bacon Act), daily and weekly number of hours worked, deductions made and actual wages paid. Whenever the Secretary of Labor has found under 29 CFR 5.5(a)(1)(iv) that the wages of any laborer or mechanic include the amount of any costs reasonably anticipated in providing benefits under a plan or program described in section 1(b)(2)(B) of the Davis-Bacon Act, the contractor shall maintain records which show that the commitment to provide such benefits is enforceable, that the plan or program is financially responsible, and that the plan or program has been communicated in writing to the laborers or mechanics affected, and records which show the costs anticipated or the actual cost incurred in providing such benefits. Contractors employing apprentices or trainees under approved programs shall maintain written evidence of the registration of apprenticeship programs and certification of trainee programs, the registration of the apprentices and trainees, and the ratios and wage rates prescribed in the applicable programs.

(ii)(A) The contractor shall submit weekly, for each week in which any contract work is performed, a copy of all payrolls to the subrecipient, that is, the entity that receives the sub-grant or loan from the State capitalization grant recipient. Such documentation shall be available on request of the State recipient or EPA. As to each payroll copy received, the subrecipient shall provide written confirmation in a form satisfactory to the State indicating whether or not the project is in compliance with the requirements of 29 CFR 5.5(a)(1) based on the most recent payroll copies for the specified week. The payrolls shall set out accurately and completely all of the information required to be maintained under 29 CFR 5.5(a)(3)(i), except that full social security numbers and home addresses shall not be included on the weekly payrolls. Instead the payrolls shall only need to include an individually identifying number for each employee (e.g., the last four digits of the employee's social security number). The required weekly payroll information may be submitted in any form desired. Optional

Form WH-347 is available for this purpose from the Wage and Hour Division Web site at http://www.dol.gov/whd/programs/dbra/wh347.htm or its successor site. The prime contractor is responsible for the submission of copies of payrolls by all subcontractors. Contractors and subcontractors shall maintain the full social security number and current address of each covered worker, and shall provide them upon request to the subrecipient(s) for transmission to the State or EPA if requested by EPA , the State, the contractor, or the Wage and Hour Division of the Department of Labor for purposes of an investigation or audit of compliance with prevailing wage requirements. It is not a violation of this section for a prime contractor to require a subcontractor to provide addresses and social security numbers to the prime contractor for its own records, without weekly submission to the subrecipient(s).

(B) Each payroll submitted shall be accompanied by a "Statement of Compliance," signed by the contractor or subcontractor or his or her agent who pays or supervises the payment of the persons employed under the contract and shall certify the following:

(1) That the payroll for the payroll period contains the information required to be provided under § 5.5 (a)(3)(ii) of Regulations, 29 CFR part 5, the appropriate information is being maintained under § 5.5 (a)(3)(i) of Regulations, 29 CFR part 5, and that such information is correct and complete;

(2) That each laborer or mechanic (including each helper, apprentice, and trainee) employed on the contract during the payroll period has been paid the full weekly wages earned, without rebate, either directly or indirectly, and that no deductions have been made either directly or indirectly from the full wages earned, other than permissible deductions as set forth in Regulations, 29 CFR part 3;

(3) That each laborer or mechanic has been paid not less than the applicable wage rates and fringe benefits or cash equivalents for the classification of work performed, as specified in the applicable wage determination incorporated into the contract.

(C) The weekly submission of a properly executed certification set forth on the reverse side of Optional Form WH-347 shall satisfy the requirement for submission of the "Statement of Compliance" required by paragraph (a)(3)(ii)(B) of this section.

(D) The falsification of any of the above certifications may subject the contractor or subcontractor to civil or criminal prosecution under section 1001 of title 18 and section 231 of title 31 of the United States Code.

(iii) The contractor or subcontractor shall make the records required under paragraph (a)(3)(i) of this section available for inspection, copying, or transcription by authorized representatives of the State, EPA or the Department of Labor, and shall permit such representatives to interview employees during working hours on the job. If the contractor or subcontractor fails to submit the required records or to make them available, the Federal agency or State may, after written notice to the contractor, sponsor, applicant, or owner, take such action as may be necessary to cause the suspension of any further payment, advance, or guarantee of funds. Furthermore, failure to submit the required records upon request or to make such records available may be grounds for debarment action pursuant to 29 CFR 5.12.

(4) Apprentices and trainees--

(i) Apprentices. Apprentices will be permitted to work at less than the predetermined rate for the work they performed when they are employed pursuant to and individually registered in a bona fide apprenticeship program registered with the U.S. Department of Labor, Employment and Training Administration, Office of Apprenticeship Training, Employer and Labor Services, or with a State Apprenticeship Agency recognized by the Office, or if a person is employed in his or her first 90 days of probationary employment as an apprentice in such an apprenticeship program, who is not individually registered in the program, but who has been certified by the Office of Apprenticeship Training, Employer and Labor Services or a State Apprenticeship Agency (where appropriate) to be eligible for probationary employment as an apprentice. The allowable ratio of apprentices to journeymen on the job site in any craft classification shall not be greater than the ratio permitted to the contractor as to the entire work force under the registered program. Any worker listed on a payroll at an apprentice wage rate, who is not registered or otherwise employed as stated above, shall be paid not less than the applicable wage rate on the wage determination for the classification of work actually performed. In addition, any apprentice performing work on the job site in excess of the ratio permitted under the registered program shall be paid not less than the applicable wage rate on the wage determination for the work actually performed. Where a contractor is performing construction on a project in a locality other than that in which its program is registered, the ratios and wage rates (expressed in percentages of the journeyman's hourly rate) specified in the contractor's or subcontractor's registered program shall be observed. Every apprentice must be paid at not less than the rate specified in the registered program for the apprentice's level of progress, expressed as a percentage of the journeymen hourly rate specified in the applicable wage determination. Apprentices shall be paid fringe benefits in accordance with the provisions of the apprenticeship program. If the apprenticeship program does not specify fringe benefits, apprentices must be paid the full amount of fringe benefits listed on the wage determination for the applicable classification. If the Administrator determines that a different practice prevails for the applicable apprentice classification, fringes shall be paid in accordance with that determination. In the event the Office of Apprenticeship Training, Employer and Labor Services, or a State Apprenticeship Agency recognized by the Office, withdraws approval of an apprenticeship program, the contractor will no longer be permitted to utilize apprentices at less than the applicable predetermined rate for the work performed until an acceptable program is approved.

(ii) Trainees. Except as provided in 29 CFR 5.16, trainees will not be permitted to work at less than the predetermined rate for the work performed unless they are employed pursuant to and individually registered in a program which has received prior approval, evidenced by formal certification by the U.S. Department of Labor, Employment and Training Administration. The ratio of trainees to journeymen on the job site shall not be greater than permitted under the plan approved by the Employment and Training Administration. Every trainee must be paid at not less than the rate specified in the approved program for the trainee's level of progress, expressed as a percentage of the journeyman hourly rate specified in the applicable wage determination. Trainees shall be paid fringe benefits in accordance with the provisions of the trainee program. If the trainee program does not mention fringe benefits, trainees shall be paid the full amount of fringe benefits listed on the wage determination unless the Administrator of the Wage and Hour Division determines that there is an apprenticeship program associated with the corresponding journeyman wage rate on the wage determination which provides for less than full fringe benefits for apprentices. Any employee listed on the payroll at a trainee rate who is not registered and participating in a training plan approved by the Employment and Training Administration shall be paid not less than the applicable wage rate on the wage determination for the classification of work actually performed. In addition, any trainee performing work on the job site in excess of the ratio permitted under the registered program shall be paid not less than the applicable wage rate on the wage determination for the work actually performed. In the event the Employment and

Training Administration withdraws approval of a training program, the contractor will no longer be permitted to utilize trainees at less than the applicable predetermined rate for the work performed until an acceptable program is approved.

(iii) Equal employment opportunity. The utilization of apprentices, trainees and journeymen under this part shall be in conformity with the equal employment opportunity requirements of Executive Order 11246, as amended and 29 CFR part 30.

(5) Compliance with Copeland Act requirements. The contractor shall comply with the requirements of 29 CFR part 3, which are incorporated by reference in this contract.

(6) Subcontracts. The contractor or subcontractor shall insert in any subcontracts the clauses contained in 29 CFR 5.5(a)(1) through (10) and such other clauses as the EPA determines may by appropriate, and also a clause requiring the subcontractors to include these clauses in any lower tier subcontracts. The prime contractor shall be responsible for the compliance by any subcontractor or lower tier subcontractor with all the contract clauses in 29 CFR 5.5.

(7) Contract termination; debarment. A breach of the contract clauses in 29 CFR 5.5 may be grounds for termination of the contract, and for debarment as a contractor and a subcontractor as provided in 29 CFR 5.12.

(8) Compliance with Davis-Bacon and Related Act requirements. All rulings and interpretations of the Davis-Bacon and Related Acts contained in 29 CFR parts 1, 3, and 5 are herein incorporated by reference in this contract.

(9) Disputes concerning labor standards. Disputes arising out of the labor standards provisions of this contract shall not be subject to the general disputes clause of this contract. Such disputes shall be resolved in accordance with the procedures of the Department of Labor set forth in 29 CFR parts 5, 6, and 7. Disputes within the meaning of this clause include disputes between the contractor (or any of its subcontractors) and Subrecipient(s), State, EPA, the U.S. Department of Labor, or the employees or their representatives.

(10) Certification of eligibility.

(i) By entering into this contract, the contractor certifies that neither it (nor he or she) nor any person or firm who has an interest in the contractor's firm is a person or firm ineligible to be awarded Government contracts by virtue of section 3(a) of the Davis-Bacon Act or 29 CFR 5.12(a)(1).

(ii) No part of this contract shall be subcontracted to any person or firm ineligible for award of a Government contract by virtue of section 3(a) of the Davis-Bacon Act or 29 CFR 5.12(a)(1).

(iii) The penalty for making false statements is prescribed in the U.S. Criminal Code, 18 U.S.C. 1001.

4. **Contract Provision for Contracts in Excess of $100,000.**

(a) Contract Work Hours and Safety Standards Act. The subrecipient shall insert the following clauses set forth in paragraphs (a)(1), (2), (3), and (4) of this section in full in any contract in an amount in excess of $100,000 and subject to the overtime provisions of the Contract Work Hours and Safety Standards Act.

These clauses shall be inserted in addition to the clauses required by Item 3, above or 29 CFR 4.6. As used in this paragraph, the terms laborers and mechanics include watchmen and guards.

(1) Overtime requirements. No contractor or subcontractor contracting for any part of the contract work which may require or involve the employment of laborers or mechanics shall require or permit any such laborer or mechanic in any workweek in which he or she is employed on such work to work in excess of forty hours in such workweek unless such laborer or mechanic receives compensation at a rate not less than one and one-half times the basic rate of pay for all hours worked in excess of forty hours in such workweek.

(2) Violation; liability for unpaid wages; liquidated damages. In the event of any violation of the clause set forth in paragraph (a)(1) of this section the contractor and any subcontractor responsible therefore shall be liable for the unpaid wages. In addition, such contractor and subcontractor shall be liable to the United States (in the case of work done under contract for the District of Columbia or a territory, to such District or to such territory), for liquidated damages. Such liquidated damages shall be computed with respect to each individual laborer or mechanic, including watchmen and guards, employed in violation of the clause set forth in paragraph (a)(1) of this section, in the sum of $10 for each calendar day on which such individual was required or permitted to work in excess of the standard workweek of forty hours without payment of the overtime wages required by the clause set forth in paragraph (a)(1) of this section.

(3) Withholding for unpaid wages and liquidated damages. The subrecipient**,** upon written request of the EPA Award Official or an authorized representative of the Department of Labor, shall withhold or cause to be withheld, from any moneys payable on account of work performed by the contractor or subcontractor under any such contract or any other Federal contract with the same prime contractor, or any other federally-assisted contract subject to the Contract Work Hours and Safety Standards Act, which is held by the same prime contractor, such sums as may be determined to be necessary to satisfy any liabilities of such contractor or subcontractor for unpaid wages and liquidated damages as provided in the clause set forth in paragraph (b)(2) of this section.

(4) Subcontracts. The contractor or subcontractor shall insert in any subcontracts the clauses set forth in paragraph (a)(1) through (4) of this section and also a clause requiring the subcontractors to include these clauses in any lower tier subcontracts. The prime contractor shall be responsible for compliance by any subcontractor or lower tier subcontractor with the clauses set forth in paragraphs (a)(1) through (4) of this section.

(b) In addition to the clauses contained in Item 3, above, in any contract subject only to the Contract Work Hours and Safety Standards Act and not to any of the other statutes cited in 29 CFR 5.1, the Subrecipient shall insert a clause requiring that the contractor or subcontractor shall maintain payrolls and basic payroll records during the course of the work and shall preserve them for a period of three years from the completion of the contract for all laborers and mechanics, including guards and watchmen, working on the contract. Such records shall contain the name and address of each such employee, social security number, correct classifications, hourly rates of wages paid, daily and weekly number of hours worked, deductions made, and actual wages paid. Further, the Subrecipient shall insert in any such contract a clause providing hat the records to be maintained under this paragraph shall be made available by the contractor or subcontractor for inspection, copying, or transcription by authorized representatives of the (write the name of agency) and the Department of Labor, and the contractor or subcontractor will permit such representatives to interview employees during working hours on the job.

5. **Compliance Verification**

(a) The subrecipient shall periodically interview a sufficient number of employees entitled to DB prevailing wages (covered employees) to verify that contractors or subcontractors are paying the appropriate wage rates. As provided in 29 CFR 5.6(a)(6), all interviews must be conducted in confidence. The subrecipient must use Standard Form 1445 (SF 1445) or equivalent documentation to memorialize the interviews. Copies of the SF 1445 are available from EPA on request.

(b) The subrecipient shall establish and follow an interview schedule based on its assessment of the risks of noncompliance with DB posed by contractors or subcontractors and the duration of the contract or subcontract. Subrecipients must conduct more frequent interviews if the initial interviews or other information indicates that there is a risk that the contractor or subcontractor is not complying with DB . Subrecipients shall immediately conduct necessary interviews in response to an alleged violation of the prevailing wage requirements. All interviews shall be conducted in confidence.

(c) The subrecipient shall periodically conduct spot checks of a representative sample of weekly payroll data to verify that contractors or subcontractors are paying the appropriate wage rates. The subrecipient shall establish and follow a spot check schedule based on its assessment of the risks of noncompliance with DB posed by contractors or subcontractors and the duration of the contract or subcontract. At a minimum, if practicable, the subrecipient should spot check payroll data within two weeks of each contractor or subcontractor's submission of its initial payroll data and two weeks prior to the completion date the contract or subcontract . Subrecipients must conduct more frequent spot checks if the initial spot check or other information indicates that there is a risk that the contractor or subcontractor is not complying with DB. In addition, during the examinations the subrecipient shall verify evidence of fringe benefit plans and payments thereunder by contractors and subcontractors who claim credit for fringe benefit contributions.

(d) The subrecipient shall periodically review contractors and subcontractors use of apprentices and trainees to verify registration and certification with respect to apprenticeship and training programs approved by either the U.S Department of Labor or a state, as appropriate, and that contractors and subcontractors are not using disproportionate numbers of, laborers, trainees and apprentices. These reviews shall be conducted in accordance with the schedules for spot checks and interviews described in Item 5(b) and (c) above.

(e) Subrecipients must immediately report potential violations of the DB prevailing wage requirements to the EPA DB contact listed above and to the appropriate DOL Wage and Hour District Office listed at http://www.dol.gov/whd/america2.htm.

ATTACHMENT 2

DAVIS-BACON WAGE RATE DETERMINATION

[SRF Assistance Recipient to insert applicable wage determinations here]

How to obtain a Wage Determination:

1. www.wdol.gov
2. Click "Selecting DBA WDs"
3. Select the State and county where the work will be performed
4. Select the "Construction Type": Heavy, Building, Highway, or Residential
5. Click on one of the wage determinations. Verify that the wage determination displayed is the correct wage determination, and not for "Heavy Dredging".
6. Select the text box displaying the Wage Determination and copy the text of the Wage Determination.
7. Click "Sign Up for Alert Service" to receive notification if the Wage Determination is updated.

When to update the wage determination:

1. If DOL updates the Wage Determination, you must update the Wage Determination through an addendum to the bid specifications.
2. If the update occurs less than 10 days prior to the date of bid opening, you are not required to update the Wage Determination.

This page intentionally left blank

ATTACHMENT 3

CERTIFICATION OF NONSEGREGATED FACILITIES

(Applicable to federally assisted construction contracts and related subcontracts exceeding $10,000 which are not exempt from the Equal Opportunity clause.)

The federally assisted construction contractor certifies that he does not maintain or provide for his employees any segregated facilities at any of his establishments, and that he does not permit his employees to perform their services at any location, under his control, where segregated facilities are maintained. The federally assisted construction contractor certified, further that he will not maintain or provide for his employees any segregated facilities at any of his establishments, and that he will not permit his employees to perform their services at any location, under his control, where segregated facilities are maintained. The federally assisted construction contractor agrees that a breach of this certification is a violation of the Equal Opportunity clause in this contract.

As used in this certification, the term "segregated facilities" means any waiting rooms, work area, rest rooms and wash rooms, restaurants and other eating areas, time clocks, locker rooms and other storage or dressing areas, parking lots, drinking fountains, recreation or entertainment areas, transportation, and housing facilities provided for employees which are segregated by explicit directive or area, in fact, segregated on the basis of race, creed, color, or national origin, because of habit, local custom, or otherwise. The federally assisted construction contractor agrees that (except where he has obtained identical certifications from proposed contractors for specific time periods) he will obtain identical certifications from proposed subcontractors prior to the award of subcontracts exceeding $10,000 which are not exempt from the provisions of the Equal Opportunity clause, and that he will retain such, certification in this file.

_____ _____

Signature Date

_____

Name and title of signer (please type)

[THIS FORM SHALL BE COMPLETED IN FULL AND SUBMITTED WITH THE BID PROPOSAL]

ATTACHMENT 4

NOTICE TO LABOR UNIONS OR OTHER ORGANIZATION OF WORKERS: NON-DISCRIMINATION IN EMPLOYMENT

TO: _____
(name of union or organization of worker)

The undersigned currently holds contract(s) with _____
(name of applicant)
_____ involving funds or credit of the U.S. Government or (a) subcontract(s) with a prime contractor holding such contract(s).

You are advised that under the provisions of the above contract(s) or subcontract(s) and in accordance with Section 202 of Executive Order 11246 dated September 24, 1965, the undersigned is obliged not to discriminate against any employee or applicant for employment because of race, color, creed, or national origin. This obligation not to discriminate in employment includes, but is not limited to, the following:

EMPLOYMENT, UPGRADING, TRANSFER OR DEMOTION

RECRUITMENT AND ADVERTISING
RATES OF PAY OR OTHER FORMS OF COMPENSATION

SELECTION FOR TRAINING INCLUDING APPRENTICESHIP, LAYOFF OR TERMINATION

This notice is furnished you pursuant to the provisions of the above contract(s) or subcontract(s) and Executive Order 11246.

Copies of this notice will be posted by the undersigned in conspicuous places available to employees or applicants for employment.

_____

_____

_____

_____
(contractor or subcontractor(s)

_____
(Date)

Disadvantaged Business Enterprise (DBE) Program
DBE Subcontractor Participation Form

An EPA Financial Assistance Agreement Recipient must require its prime contractors to provide this form to its DBE subcontractors. This form gives a DBE[1] subcontractor[2] the opportunity to describe work received and/or report any concerns regarding the EPA-funded project (e.g., in areas such as termination by prime contractor, late payments, etc.). The DBE subcontractor can, as an option, complete and submit this form to the EPA DBE Coordinator at any time during the project period of performance.

Subcontractor Name Click here to enter text.	Project Name Click here to enter text.	
Bid/ Proposal No. Click here to enter text.	Assistance Agreement ID No. (if known) Click here to enter text.	Point of Contact Click here to enter text.
Address Click here to enter text.		
Telephone No. Click here to enter text.	Email Address Click here to enter text.	
Prime Contractor Name Click here to enter text.	Issuing/Funding Entity **Department of Ecology**	

Contract Item Number	**Description of Work Received from the Prime Contractor Involving Construction, Services, Equipment, or Supplies**	**Amount Received by Prime Contractor**
Click here to enter text.	Click here to enter text.	Click here to enter text.

[1] A DBE is a Disadvantaged, Minority, or Woman Business Enterprise that has been certified by an entity from which EPA accepts certifications as described in 40 CFR 33.204-33.205 or certified by EPA. EPA accepts certifications from entities that meet or exceed EPA certification standards as described in 40 CFR 33.202.

[2] Subcontractor is defined as a company, firm, joint venture, or individual who enters into an agreement with a contractor to provide services pursuant to an EPA award of financial assistance.

Please use the space below to report any concerns regarding the above EPA-funded project:

Click here to enter text.

Subcontractor Signature	Print Name
Title	**Date**
Click here to enter text.	Click here to enter text.

Disadvantaged Business Enterprise (DBE) Program
DBE Subcontractor Performance Form

This form is intended to capture the DBE[1] subcontractor's[2] description of work to be performed and the price of the work submitted to the prime contractor. An EPA Financial Assistance Agreement Recipient must require its prime contractor to have its DBE subcontractors complete this form and include all completed forms in the prime contractors bid or proposal package.

Subcontractor Name Click here to enter text.	Project Name Click here to enter text.	
Bid/ Proposal No. Click here to enter text.	Assistance Agreement ID No. (if known) Click here to enter text.	Point of Contact Click here to enter text.
Address Click here to enter text.		
Telephone No. Click here to enter text.	Email Address Click here to enter text.	
Prime Contractor Name Click here to enter text.	Issuing/Funding Entity **Department of Ecology**	

Contract Item Number	**Description of Work Submitted to the Prime Contractor Involving Construction, Services, Equipment, or Supplies**	**Price of Work Submitted to the Prime Contractor**
Click here to enter text.	Click here to enter text.	Click here to enter text.
DBE Certified By: ☐DOT ☐ SBA ☐ Other: Click here to enter text.	Meets/ exceeds EPA certification standards? ☐ YES ☐ NO ☐ Unknown	

[1] A DBE is a Disadvantaged, Minority, or Woman Business Enterprise that has been certified by an entity from which EPA accepts certifications as described in 40 CFR 33.204-33.205 or certified by EPA. EPA accepts certifications from entities that meet or exceed EPA certification standards as described in 40 CFR 33.202.

[2] Subcontractor is defined as a company, firm, joint venture, or individual who enters into an agreement with a contractor to provide services pursuant to an EPA award of financial assistance.

Disadvantaged Business Enterprise (DBE) Program
DBE Subcontractor Performance Form

I certify under penalty of perjury that the forgoing statements are true and correct. Signing this form does not signify a commitment to utilize the subcontractors above. I am aware of that in the event of a replacement of a subcontractor, I will adhere to the replacement requirements set forth in 40 CFR Part 33 Section 33.302 (c).

Prime Contractor Signature	Print Name
Title	**Date**
Click here to enter text.	Click here to enter text.

Subcontractor Signature	Print Name
Title	**Date**
Click here to enter text.	Click here to enter text.

Disadvantaged Business Enterprise (DBE) Program
DBE Subcontractor Utilization Form

This form is intended to capture the prime contractor's actual and/or anticipated use of identified certified DBE[1] subcontractors[2] and the estimated dollar amount of each subcontract. An EPA Financial Assistance Agreement Recipient must require its prime contractors to complete this form and include it in the bid or proposal package. Prime contractors should also maintain a copy of this form on file.

Prime Contractor Name Click here to enter text.	Project Name Click here to enter text.	
Bid/ Proposal No. Click here to enter text.	Assistance Agreement ID No. (if known) Click here to enter text.	Point of Contact Click here to enter text.
Address Click here to enter text.		
Telephone No. Click here to enter text.	Email Address Click here to enter text.	
Issuing/Funding Entity **Department of Ecology**		

I have identified potential DBE certified subcontractors ☐ YES ☐ NO			
If yes, please complete the table below. If no, please explain: Click here to enter text.			
Subcontractor Name/ Company Name	**Company Address/ Phone/ Email**	**Estimated Dollar Amount**	**Currently DBE Certified?**
Click here to enter text.	Click here to enter text.	Click here to enter text.	Click here to enter text.
Click here to enter text.	Click here to enter text.	Click here to enter text.	Click here to enter text.
Click here to enter text.	Click here to enter text.	Click here to enter text.	Click here to enter text.

Add more lines if needed

[1] A DBE is a Disadvantaged, Minority, or Woman Business Enterprise that has been certified by an entity from which EPA accepts certifications as described in 40 CFR 33.204-33.205 or certified by EPA. EPA accepts certifications from entities that meet or exceed EPA certification standards as described in 40 CFR 33.202.

[2] Subcontractor is defined as a company, firm, joint venture, or individual who enters into an agreement with a contractor to provide services pursuant to an EPA award of financial assistance.

Disadvantaged Business Enterprise (DBE) Program
DBE Subcontractor Utilization Form

I certify under penalty of perjury that the forgoing statements are true and correct. Signing this form does not signify a commitment to utilize the subcontractors above. I am aware of that in the event of a replacement of a subcontractor, I will adhere to the replacement requirements set forth in 40 CFR Part 33 Section 33.302 (c).

Prime Contractor Signature	Print Name
Title	**Date**
Click here to enter text.	Click here to enter text.

PART 6

SPECIAL PROVISIONS
TO THE
STANDARD SPECIFICATIONS

TECHNICAL SPECIFICATIONS
02 41 19, 33 32 19, 33 32 20, 44 42 00, 26 00 00, 26 00 01, 26 00 02, 26 01 26, 26 05 19, 26 05 26, 26 05 33, 26 25 16, 26 27 13, 26 27 26, 26 28 00, 26 28 16, 26 70 00, 26 90 10, 26 90 21 26 90 22, 26 90 25, 40 05 50, 40 70 00, 43 11 33

INTRODUCTION TO THE SPECIAL PROVISIONS

The work on this project shall be accomplished in accordance with the *Standard Specifications for Road, Bridge and Municipal Construction*, 2020 edition, as issued by the Washington State Department of Transportation (WSDOT) and the American Public Works Association (APWA), Washington State Chapter (hereafter "Standard Specifications"). The Standard Specifications, as modified or supplemented by the Amendments to the Standard Specifications and these Special Provisions, all of which are made a part of the Contract Documents, shall govern all of the Work.

These Special Provisions are made up of project-specific Special Provisions. Each Provision either supplements, modifies, or replaces the comparable Standard Specification, or is a new Provision. The deletion, amendment, alteration, or addition to any subsection or portion of the Standard Specifications is meant to pertain only to that particular portion of the section, and in no way should it be interpreted that the balance of the section does not apply.

Also incorporated into the Contract Documents by reference are:

- *Manual on Uniform Traffic Control Devices for Streets and Highways*, currently adopted edition, with Washington State modifications, if any
- *Standard Plans for Road, Bridge and Municipal Construction*, WSDOT/APWA, current edition

Contractor shall obtain copies of these publications, at Contractor's own expense.

IMPORTANT – PLEASE READ

The Special Provisions are documents that: *supplement*, add *new* specifications, *replace*, or *revise* the Standard Specifications. To clarify the purpose of each section provided, Special Provisions have the following section descriptions.

Supplement:	Text supplements or adds clarification to that Section of the Standard Specifications.
Revision:	Parts of that Section of the Standard Specification are altered.
Replacement:	Text replaces the entire identified Section of the Standard Specifications.
New Section:	This Section is unique to this project and will not be found in the Standard Specifications.
Deletion:	This Section is deleted in its entirety.

DIVISION 1
GENERAL REQUIREMENTS

DESCRIPTION OF WORK *New Section*

This Contract provides for the improvements of septic tank effluent pumping stations, sewer force mains, gravity sewer mains, a sewer lift station, electrical, SCADA and piping modifications at the Tribe's MBR treatment facility, and other related work, all in accordance with the attached Contract Plans, these Contract Provisions, and the Standard Specifications.

1-01 DEFINITIONS AND TERMS

1-01.3 Definitions *Revision*

Delete the heading **Completion Dates** and the three paragraphs that follow it, and replace them with the following:

Dates

Bid Opening Date
The date on which the Confederated Tribes of the Chehalis Reservation opens and evaluates the Bids.

Award Date
The date of the formal decision of the Confederated Tribes of the Chehalis Reservation to accept the highest ranking Bid Proposal for the Work.

Contract Execution Date
The date the Confederated Tribes of the Chehalis Reservation officially binds the Tribe to the Contract.

Notice to Proceed Date
The date stated in the Notice to Proceed on which the Contract time begins.

Substantial Completion Date
The day the Engineer determines the Confederated Tribes of the Chehalis Reservation has full and unrestricted use and benefit of the facilities, both from the operational and safety standpoint, any remaining traffic disruptions will be rare and brief, and only minor incidental work, replacement of temporary substitute facilities, plant establishment periods, or correction or repair remains for the Physical Completion of the total Contract.

Physical Completion Date
The day all of the Work is physically completed on the project. All documentation required by the Contract and required by law does not necessarily need to be furnished by the Contractor by this date.

Completion Date
The day all the Work specified in the Contract is completed and all the obligations of the Contractor under the contract are fulfilled by the Contractor. All documentation required by the Contract and required by law must be furnished by the Contractor before establishment of this date.

Final Acceptance Date
The date on which the Confederated Tribes of the Chehalis Reservation accepts the Work as complete.

Delete the heading and associated definition of **Contracting Agency** and add the following:

The Confederated Tribes of the Chehalis Reservation – The Tribal entity that is responsible for the execution and administration of the Contract. Any reference to **Contracting Agency** shall be replaced with **The Confederated Tribes of the Chehalis Reservation**.

Change the definition of **Contractor** to read:

Contractor – The individual, partnership, firm, corporation, or joint venture, contracting with the Tribe to do the prescribed Work.

Change the definition of Engineer to read:

Engineer – The Tribes representative who directly supervises the engineering and administration of a construction contract.

Supplement this Section with the following:

All references in the Standard Specifications, Amendments, or WSDOT General Special Provisions, to the terms “Department of Transportation”, “Washington State Transportation Commission”, “Commission”, “Secretary of Transportation”, “Secretary”, “Headquarters”, and “State Treasurer” shall be revised to read “The Confederated Tribes of the Chehalis Reservation”.

All references to the terms “State” or “state” shall be revised to read “The Confederated Tribes of the Chehalis Reservation” unless the reference is to an administrative agency of the State of Washington, a State statute or regulation, or the context reasonably indicates otherwise.

All references to “State Materials Laboratory” shall be revised to read “The Confederated Tribes of the Chehalis Reservation designated location”.

All references to “final contract voucher certification” shall be interpreted to mean the Confederated Tribes of the Chehalis Reservation form(s) by which final payment is authorized, and final completion and acceptance granted.

Additive
A supplemental unit of work or group of bid items, identified separately in the Bid Proposal, which may, at the discretion of the Confederated Tribes of the Chehalis Reservation, be awarded in addition to the base bid.

Alternate
One of two or more units of work or groups of bid items, identified separately in the Bid Proposal, from which the Confederated Tribes of the Chehalis Reservation may make a choice between different methods or material of construction for performing the same work.

Business Day
A business day is any day from Monday through Friday except holidays as listed in Section 1-08.5.

Contract Bond
The definition in the Standard Specifications for “Contract Bond” applies to whatever bond form(s) are required by the Contract Documents, which may be a combination of a Payment Bond and a Performance Bond.

Contract Documents
See definition for “Contract”.

Contract Time
The period of time established by the terms and conditions of the Contract within which the Work must be physically completed.

Notice of Award
The written notice from the Confederated Tribes of the Chehalis Reservation to the successful Bidder signifying the Confederated Tribes of the Chehalis Reservation’s acceptance of the Bid Proposal.

Notice to Proceed

The written notice from the Confederated Tribes of the Chehalis Reservation or Engineer to the Contractor authorizing and directing the Contractor to proceed with the Work and establishing the date on which the Contract time begins.

Traffic
Both vehicular and non-vehicular traffic, such as pedestrians, bicyclists, wheelchairs, and equestrian traffic.

1-02 BID PROCEDURES AND CONDITIONS

1-02.1 Prequalification of Bidders *Replacement*

Section 1-02.1 including title is deleted and replaced with the following:

1-02.1 Qualifications of Bidder

Before award of a public works contract, a bidder must meet at least the minimum qualifications of RCW 39.04.350(1) to be considered a responsible bidder and qualified to be awarded a contract for this project.

1-02.2 Plans and Specifications *Replacement*

Section 1-02.2 is deleted and replaced with the following:

Information as to where Bid Documents can be obtained or reviewed can be found in the Call for Bids (Advertisement for Bids) for the work.

After award of the contract, plans and specifications will be issued to the Contractor at no cost as detailed below:

To Prime Contractor	No. of Sets	Basis of Distribution
Reduced plans (11" x 17")	6	Furnished automatically upon award.
Contract Provisions	6	Furnished automatically upon award.
Large plans (e.g., 22" x 34")	2	Furnished automatically upon award.

Additional plans and Contract Provisions may be obtained by the Contractor from the source stated in the Call for Bids, at the Contractor's own expense.

1-02.4(1) General *Revision*

The first sentence of the last paragraph is revised to read:

Any prospective Bidder desiring an explanation or interpretation of the Bid Documents, must request the explanation or interpretation in writing soon enough to allow a written reply to reach all prospective Bidders before the submission of their Bids.

1-02.5 Proposal Forms *Replacement*

Section 1-02.5 is deleted and replaced with the following:

The Proposal Form will identify the project and its location and describe the work. It will also list estimated quantities, units of measurement, the items of work, and the materials to be furnished at the unit bid prices. The bidder shall complete spaces on the proposal form that call for, but are not limited to, unit prices; extensions; summations; the total bid amount; signatures; date; and, where applicable, retail sales taxes and acknowledgment of addenda; the bidder's name, address, telephone number, and signature; the bidder's M/WBE commitment, if applicable; a State of Washington Contractor's Registration Number; and a Business License Number, if applicable. Bids shall be completed by typing or shall be printed in ink by hand, preferably in black ink. The required certifications are included as part of the Proposal Form.

The Confederated Tribes of the Chehalis Reservation reserves the right to arrange the proposal forms with alternates and additives, if such be to the advantage of the Tribe. The bidder shall bid on all alternates and additives set forth in the Proposal Form unless otherwise specified.

1-02.6 Preparation of Proposal *Replacement*

Section 1-02.3 is supplemented with the following:

<u>The Bidder shall submit with the Bid:</u>

- Certification Of Nonsegregated Facilities (attachment 3)
- DBE Subcontractor Utilization Form (EPA Form 6100-4)
- DBE Subcontractor Performance Form (EPA Form 6100-3) for each DBE subcontractor.

The second paragraph of Section 1-02.6 is supplemented with the following:

4. If a minimum bid amount has been established for any item, the unit or lump sum price must equal or exceed the minimum amount stated.
5. Any correction to a bid made by interlineation, alteration, or erasure, shall be initialed by the signer of the bid.

Delete the last two paragraphs of Section 1-02.6, and replace them with the following:

If no Subcontractor is listed, the Bidder acknowledges that it does not intend to use any Subcontractor to perform those items of work.

The Bidder shall submit with their Bid a completed Contractor Certification Wage Law Compliance form, provided by the Confederated Tribes of the Chehalis Reservation. Failure to return this certification as part of the Bid Proposal package will make this Bid Nonresponsive and ineligible for Award. A Contractor Certification of Wage Law Compliance form is included in the Proposal Forms.

The Bidder shall make no stipulation on the Bid Form, nor qualify the bid in any manner.

A bid by a corporation shall be executed in the corporate name, by the president or a vice president (or other corporate officer accompanied by evidence of authority to sign).

A bid by a partnership shall be executed in the partnership name, and signed by a partner. A copy of the partnership agreement shall be submitted with the Bid Form if any UDBE requirements are to be satisfied through such an agreement.

A bid by a joint venture shall be executed in the joint venture name and signed by a member of the joint venture. A copy of the joint venture agreement shall be submitted with the Bid Form if any W/MBE requirements are to be satisfied through such an agreement.

1-02.7 Bid Deposit *Revision*

Delete this section in its entirety. A Bid Deposit will not be required to submit a bid on this Project.

1-02.9 Delivery of Proposal *Replacement*

Section 1-02.9 is deleted and replaced with the following:

Each Proposal shall be submitted in a sealed envelope, with the Project Name and Project Number as stated in the Call for Bids clearly marked on the outside of the envelope, or as otherwise required in the Bid Documents, or by email to Bvoncluck@chehalistribe.org to ensure proper handling and delivery.

All information required to be submitted with the Bid Proposal must be submitted with the Bid Proposal itself, at the time stated in the Call for Bids.

Proposals that are received as required will be opened and reviewed by a selection committee. The Confederated Tribes of the Chehalis Reservation will not open or consider any Bid Proposal that is received after the time specified in the Call for Bids for receipt of Bid Proposals, or received in a location other than that specified in the Call for Bids. The Confederated Tribes of the Chehalis Reservation will not open or consider any "Supplemental Information" that is received after the time specified above, or received in a location other than that specified in the Call for Bids.

Proposals will **NOT** be opened publicly and read aloud. A formal public bid opening will not be held.

If an emergency or unanticipated event interrupts normal work processes of the Confederated Tribes of the Chehalis Reservation so that Proposals cannot be received at the office designated for receipt of bids as specified in Section 1-02.12 the time specified for receipt of the Proposal will be deemed to be extended to the same time of day specified in the solicitation on the first work day on which the normal work processes of the Confederated Tribes of the Chehalis Reservation resume.

1-02.10 Withdrawing, Revising, or Supplementing Proposal *Replacement*

Section 1-02.10 is deleted and replaced with the following:

After submitting a physical Bid Proposal to the Confederated Tribes of the Chehalis Reservation, the Bidder may withdraw, revise, or supplement it if:

1. The Bidder submits a written request signed by an authorized person and physically delivers it to the place designated for receipt of Bid Proposals or delivers by email to Bvoncluck@chehalistribe.org, and
2. The Confederated Tribes of the Chehalis Reservation receives the request before the time set for receipt of Bid Proposals, and
3. The revised or supplemented Bid Proposal (if any) is received by the Confederated Tribes of the Chehalis Reservation before the time set for receipt of Bid Proposals.

If the Bidder's request to withdraw, revise, or supplement its Bid Proposal is received before the time set for receipt of Bid Proposals, the Confederated Tribes of the Chehalis Reservation will return the unopened Proposal package to the Bidder. The Bidder must then submit the revised or supplemented package in its entirety. If the Bidder does not submit a revised or supplemented package, then its bid shall be considered withdrawn.

Late revised or supplemented Bid Proposals or late withdrawal requests will be date recorded by the Confederated Tribes of the Chehalis Reservation and returned unopened. Mailed, emailed, or faxed requests to withdraw, revise, or supplement a Bid Proposal are not acceptable.

1-02.12 Public Opening of Proposals *Replacement*

Section 1-02.12 is deleted and replaced with the following:

1-02.12 Opening of Proposals

Sealed bids are to be received at the Planning Department, c/o Brian von Clück, 420 Howanut Road, Oakville, WA. 98568, prior to the time and date specified in the Advertisement For Bids.

Bids will opened and scored based on the selection criteria provided. Bid opening will not be open to the public.

1-02.13 Irregular Proposals *Replacement*

Section 1-02.13 is deleted and replaced with the following:

1. A Proposal will be considered irregular and will be rejected if:
   a. The Bidder is not prequalified when so required;
   b. The authorized Proposal form furnished by the Confederated Tribes of the Chehalis Reservation is not used or is altered;
   c. The completed Proposal form contains any unauthorized additions, deletions, alternate Bids, or conditions;
   d. The Bidder adds provisions reserving the right to reject or accept the award, or enter into the Contract;
   e. A price per unit cannot be determined from the Bid Proposal;
   f. The Proposal form is not properly executed;
   g. The Bidder fails to submit or properly complete a Subcontractor list, if applicable, as required in Section 1-02.6;
   h. The Bidder fails to submit or properly complete Certification Of Nonsegregated Facilities (attachment 3);
   i. The Bidder fails to submit DBE Subcontractor Utilization Form (EPA Form 6100-4)
   j The Bidder fails to submit DBE Subcontractor Performance Form (EPA Form 6100-3) for each DBE subcontractor.
   m. The Bid Proposal does not constitute a definite and unqualified offer to meet the material terms of the Bid invitation; or
   n. More than one Proposal is submitted for the same project from a Bidder under the same or different names.

2. A Proposal may be considered irregular and may be rejected if:
   a. The Proposal does not include a unit price for every Bid item;
   b. Any of the unit prices are excessively unbalanced (either above or below the amount of a reasonable Bid) to the potential detriment of the Confederated Tribes of the Chehalis Reservation;
   c. Receipt of Addenda is not acknowledged;
   d. A member of a joint venture or partnership and the joint venture or partnership submit Proposals for the same project (in such an instance, both Bids may be rejected); or
   e. If Proposal form entries are not made in ink.

1-02.14 Disqualification of Bidders *Replacement*

Delete this section and replace it with the following:

A Bidder will be deemed not responsible if the Bidder does not meet the mandatory bidder responsibility criteria in RCW 39.04.350(1), as amended.

The Confederated Tribes of the Chehalis Reservation will verify that the Bidder meets the mandatory bidder responsibility criteria in RCW 39.04.350(1). To assess bidder responsibility, the Confederated Tribes of the Chehalis Reservation reserves the right to request documentation as

needed from the Bidder and third parties concerning the Bidder's compliance with the mandatory bidder responsibility criteria.

If the Confederated Tribes of the Chehalis Reservation determines the Bidder does not meet the mandatory bidder responsibility criteria in RCW 39.04.350(1) and is therefore not a responsible Bidder, the Confederated Tribes of the Chehalis Reservation shall notify the Bidder in writing, with the reasons for its determination. If the Bidder disagrees with this determination, it may appeal the determination within two (2) business days of the Confederated Tribes of the Chehalis Reservation's determination by presenting its appeal and any additional information to the Confederated Tribes of the Chehalis Reservation. The Confederated Tribes of the Chehalis Reservation will consider the appeal and any additional information before issuing its final determination. If the final determination affirms that the Bidder is not responsible, the Confederated Tribes of the Chehalis Reservation will not execute a contract with any other Bidder until at least two business days after the Bidder determined to be not responsible has received the Confederated Tribes of the Chehalis Reservation's final determination.

1-02.15 Pre Award Information *Replacement*

Section 1-02.15 is deleted and replaced with the following:

Before awarding any contract, the Confederated Tribes of the Chehalis Reservation may require one or more of these items or actions of the apparent lowest responsible bidder:

1. A complete statement of the origin, composition, and manufacture of any or all materials to be used,
2. Samples of these materials for quality and fitness tests,
3. A progress schedule (in a form the Confederated Tribes of the Chehalis Reservation requires) showing the order of and time required for the various phases of the work,
4. A breakdown of costs assigned to any bid item,
5. Attendance at a conference with the Engineer or representatives of the Engineer,
6. <u>Obtain, and furnish a copy of, a business license to do business on Tribal Property.</u>
7. Any other information or action taken that is deemed necessary to ensure that the bidder is the lowest responsible bidder.

1-03 AWARD AND EXECUTION OF CONTRACT

1-03.1 Consideration of Bids *Revision*

Section 1-03.3 is deleted and replaced with the following:

After opening and reading proposals, the Confederated Tribes of the Chehalis Reservation will check them for correctness of extensions of the prices per unit and the total price. If a discrepancy exists between the price per unit and the extended amount of any bid item, the price per unit will control. <u>If a minimum bid amount has been established for any item and the bidder's unit or lump sum price is less than the minimum specified amount, the Confederated Tribes of the Chehalis Reservation will unilaterally revise the unit or lump sum price, to the minimum specified amount and recalculate the extension.</u> The total of extensions, corrected where necessary, will be used by the Confederated Tribes of the Chehalis Reservation for cost criteria evaluation and to fix the Awarded Contract Price amount and the amount of the contract bond.

All evaluation criteria will be reviewed by a selection committee and ranked based on the total number of points assigned to each criteria. The bidder receiving the highest ranking from the committee will be awarded the bid. The bidder shall provide all required information on the bid forms to evaluate the proposal. Missing information or improperly completed forms could result in lower scores for the associated criteria.

1-03.3 Execution of Contract *Replacement*

Section 1-03.3 is deleted and replaced with the following:

Copies of the Contract Provisions, including the unsigned Form of Contract, will be available for signature by the successful bidder on the first business day following award. The number of copies to be executed by the Contractor will be determined by the Confederated Tribes of the Chehalis Reservation.

Within 14 calendar days after the award date, the successful bidder shall return the signed the Confederated Tribes of the Chehalis Reservation-prepared contract, an insurance certification as required by Section 1-07.18, and a satisfactory bond as required by law and Section 1-03.4. Before execution of the contract by the Confederated Tribes of the Chehalis Reservation, the successful bidder shall provide any pre-award information the Confederated Tribes of the Chehalis Reservation may require under Section 1-02.15.

Until the Confederated Tribes of the Chehalis Reservation executes a contract, no proposal shall bind the Confederated Tribes of the Chehalis Reservation nor shall any work begin within the project limits or within the Confederated Tribes of the Chehalis Reservation-furnished sites. The Contractor shall bear all risks for any work begun outside such areas and for any materials ordered before the contract is executed by the Confederated Tribes of the Chehalis Reservation.

If the bidder experiences circumstances beyond their control that prevents return of the contract documents within the calendar days after the award date stated above, the Confederated Tribes of the Chehalis Reservation may grant up to a maximum of 7 additional calendar days for return of the documents, provided the Confederated Tribes of the Chehalis Reservation deems the circumstances warrant it.

1-03.4 Contract Bond *Revision*

The first paragraph of Section 1-03.4 is revised to read:

The successful bidder shall provide executed payment and performance bond(s) for the full contract amount. The bond may be a combined payment and performance bond; or be separate payment and performance bonds. In the case of separate payment and performance bonds, each shall be for the full contract amount. The bond(s) shall:

1. Be on Confederated Tribes of the Chehalis Reservation-furnished form(s);
2. Be signed by an approved surety (or sureties) that:
   a. Is registered with the Washington State Insurance Commissioner, and
   b. Appears on the current Authorized Insurance List in the State of Washington published by the Office of the Insurance Commissioner,
3. Guarantee that the Contractor will perform and comply with all obligations, duties, and conditions under the Contract, including but not limited to the duty and obligation to indemnify, defend, and protect the Confederated Tribes of the Chehalis Reservation against all losses and claims related directly or indirectly from any failure:
   a. Of the Contractor (or any of the employees, subcontractors, or lower tier subcontractors of the Contractor) to faithfully perform and comply with all contract obligations, conditions, and duties, or
   b. Of the Contractor (or the subcontractors or lower tier subcontractors of the Contractor) to pay all laborers, mechanics, subcontractors, lower tier subcontractors, material person, or any other person who provides supplies or provisions for carrying out the work;
4. Be conditioned upon the payment of taxes, increases, and penalties incurred on the project.
5. Be accompanied by a power of attorney for the Surety's officer empowered to sign the bond; and
6. Be signed by an officer of the Contractor empowered to sign official statements (sole proprietor or partner). If the Contractor is a corporation, the bond(s) must be signed by the president or vice president, unless accompanied by written proof of the authority of the individual signing the bond(s) to bind the corporation (i.e., corporate resolution, power of attorney, or a letter to such effect signed by the president or vice president).

1-03.7 Judicial Review *Replacement*

Section 1-03.7 is deleted and replaced with the following:

Any decision made by the Confederated Tribes of the Chehalis Reservation regarding the Award and execution of the Contract or Bid rejection shall be conclusive

Add the following New Section:

1-03.8 State of Washington – Contract Conditions

It is anticipated that this project will be funded in part by the Washington State Department of Ecology. Neither the State Of Washington nor any of its departments or employees are, or shall be, a party to this contract or any subcontract.

Third-Party Beneficiary: All parties agree that the State of Washington shall be, and is hereby, named as an express third-party beneficiary of this contract, with full rights as such.

1-04 Scope of the Work

1-04.2 Coordination of Contract Documents, Plans, Special Provisions, Specifications, and Addenda *Revision*

The second paragraph of Section 1-04.2 is revised to read:

Any inconsistency in the parts of the contract shall be resolved by following this order of precedence (e.g., 1 presiding over 2, 2 over 3, 3 over 4, and so forth):

1. Addenda,
2. Proposal Form,
3. Special Provisions, including APWA General Special Provisions, if they are included;
4. Contract Plans,
5. Amendments to the Standard Specifications,
6. WSDOT Standard Specifications for Road, Bridge, and Municipal Construction,
7. The Confederated Tribes of the Chehalis Reservation's Standard Plans or Details (if any), and
8. WSDOT Standard Plans for Road, Bridge, and Municipal Construction,

1-04.4 Changes

1-04.4(1) Minor Changes *Revision*

The first sentence of the first paragraph of Section 1-04.4(1) is revised to read:

Payments or credits for changes in the collection system improvements may be made under the Bid item "Minor Changes – Community System". The total amount available for all minor changes in the collection system cannot exceed $25,000. Payments or credits for changes in the wastewater treatment plant work may be made under the Bid item "Minor Changes – WWTP". The total amount available for all minor changes in the WWTP cannot exceed $35,000.

The last paragraph of Section 1-04.4(1) is revised to read:

Payments or credits will be determined in accordance with Section 1-09.4. For the purpose of providing a common Proposal for all Bidders, The Consolidated Tribes of the Chehalis Reservation has entered an amount for "Minor Changes – Community System" and "Minor Changes – WWTP" in the Proposal to become a part of the total Bid by the Contractor.

Supplement

Section 1-04.4(1) is supplemented with the following:

Payment will be made for each of the following bid items:

Minor Change Community System	Calculation
Minor Changes WWTP	Calculation

1-05 CONTROL OF WORK

1-05.4 Conformity With and Deviations From Plans and Stakes *Replacement*

Section 1-05.4 is deleted and replaced with the following:

1-05.4 Roadway and Utility Surveys

The Contractor shall furnish all survey necessary for the construction of this project.

The Contractor shall be responsible for setting, maintaining and resetting (as may be required) all horizontal and vertical construction staking necessary for the installation, construction or reconstruction of the utilities, roadbed, drainage, surfacing, walls, curbing, sidewalk and driveway approaches, paving, channelization and pavement marking, illumination and signals, fencing, and signing. Except for the survey control data to be furnished by the Confederated Tribes of the Chehalis Reservation, any additional calculations, surveying, and measuring required for setting and maintaining the necessary lines and grades shall be the Contractor's responsibility.

The meaning of words and terms used in this provision shall be as listed in “Definitions of Surveying and Associated Terms” current edition, published by the American Congress on Surveying and Mapping and the American Society of Civil Engineers.

Contractor-supplied survey work shall include but not be limited to the following:

1. Verify the primary horizontal and vertical control furnished by the Confederated Tribes of the Chehalis Reservation and expand into secondary control by adding stakes and hubs as well as additional survey control needed for the project. **Vertical secondary control shall be established using spirit levels, not a GPS system.** Provide level notes and horizontal control notes and other descriptions of secondary control to the Confederated Tribes of the Chehalis Reservation.

2. Establish intermediate benchmarks as needed to provide vertical control throughout the project. A copy of cut sheets with reference to actual benchmark elevations shall be provided to the Engineer at the same time it is supplied to the Contractor, but not less than 2 working days prior to construction.

3. Establish the centerlines of all alignments by placing hubs, stakes, or marks on centerline or on offsets to centerline at points along the alignments at a maximum spacing of fifty feet and at all grade breaks and curve points (PCs, PTs, and PIs).

4. Establish clearing limits. Stake at all angle points and intermediate points at a maximum spacing of fifty feet between stakes.

5. Establish grading limits. Place slope stakes at maximum centerline increments of 50 feet. Establish offset reference to all slope stakes.

6. Setting and maintaining 2-inch by 2-inch offset hubs with a tack at 50-foot intervals for all sanitary sewer lines and grades. The offset hubs shall be set perpendicular to the sanitary

sewer line, with two hubs set at septic tank pumping chamber locations. The stationing, offset distance, cut to invert, cut to rim, and hub elevation shall be marked on the guard stake.

7. Establish roadbed, and surfacing elevations by placing stakes/hubs at the top of subgrade and at the top of each course of surfacing. Subgrade and surfacing stakes/hubs shall be set at horizontal intervals not greater than 50 feet in tangent sections, 25 feet in curve sections with a radius less than 300 feet, and at 10-foot intervals in intersection radii with a radius less than 10 feet. Transverse staking shall be placed at all locations where the roadway slope changes and at additional points such that the transverse spacing of stakes/hubs is not more than 12 feet.

8. Establish top back of Curb elevations by setting stakes/hubs at horizontal intervals not greater than 25 feet in tangent sections; all point of curvature (PC) stations; point of tangency (PT) stations; at curb radii, at quarter points in all curb curve sections and at center of pedestrian ramp stations showing gutterline grade.

9. Establish sidewalk control points at grade breaks and panel angle points by setting stakes / hubs marked with cuts and fills to finish grade required to construct pedestrian ramp plans after demolition and subgrade is excavated.

10. According to WAC 332-120 “Survey Monuments – Removal or Destruction”, a surveyor licensed in the State of Washington has been hired by the Confederated Tribes of the Chehalis Reservation to search the proposed construction area for known or existing survey monuments. All found monuments are shown on the plans. If, during construction, the Contractor discovers existing survey monuments, not shown on the plans, he shall immediately notify the Engineer. If a property corner is shown on the plans and it is not shown to be removed and the Contractor’s operations moves or destroys it, the Contractor shall re-establish it or replace it at his own expense. Re-establishment or replacement of property corners shall be done only by a Washington State licensed Land Surveyor and be in accordance with WAC 332-120.

11. The contractor shall coordinate with the Surveyor Consultant, hired by the Confederated Tribes of the Chehalis Reservation, for re-establishing all monuments to be installed in a monument case in accordance with Section 8-13. The Contractor shall set the monument case and anchor pipe in accordance with Section 8-13. The Surveyor Consultant, hired by the Confederated Tribes of the Chehalis Reservation, will furnish, install, label, and mark the monument cap inside the monument case.

12. Setting and maintaining 2-inch by 2-inch offset hubs at all sewer service connections and manholes. The stationing, cut to invert, and hub elevation shall be marked on the guard stake. For each side sewer stub, two laths shall be set: one at the stub end and one at the offset hub.

The Contractor shall provide the Confederated Tribes of the Chehalis Reservation copies of any, survey notes, references for monuments, calculations and staking data when requested by the Engineer.

Copies of the primary survey control data provided by the Confederated Tribes of the Chehalis Reservation are available for the bidder's inspection at the office of the Project Engineer.

Detailed survey records shall be maintained, including a description of the work performed on each shift, the methods utilized, and the control points used. The record shall be adequate to allow the survey to be reproduced. A copy of each day's record shall be provided to the Engineer within three working days after the end of the shift.

The meaning of words and terms used in this provision shall be as listed in "Definitions of Surveying and Associated Terms" current edition, published by the American Congress on Surveying and Mapping and the American Society of Civil Engineers.

To facilitate the establishment of these lines and elevations, the Confederated Tribes of the Chehalis Reservation will provide the Contractor with primary survey control information consisting of descriptions of a minimum of two primary control points used for the horizontal and vertical control. Primary control points will be described by reference to the project alignment and the coordinate system and elevation datum utilized by the project.

The Contractor shall ensure a surveying accuracy within the following tolerances:

	Vertical	Horizontal
Slope stakes	±0.2 feet	±1.0 feet
Subgrade grade stakes/hubs set 0.04 feet below grade	0 high 0.04 feet low	±0.1 feet (parallel to alignment) ±0.1 feet (normal to alignment)
Stationing on roadway	N/A	±0.1 feet
Alignment on roadway	N/A	±0.04 feet
Top of Crushed Surfacing or paving	0 low 0.01 feet high	±0.04 feet (parallel to alignment) ±0.04 feet (normal to alignment)
Top of Curb	±0.02 feet	±0.04 feet (parallel to alignment) ±0.04 feet (normal to alignment)
Concrete Joints	±0.02 feet	±0.04 feet (parallel to alignment) ±0.04 feet (normal to alignment)

The Confederated Tribes of the Chehalis Reservation may spot-check the Contractor's surveying. These spot-checks will not change the requirements for normal checking by the Contractor.

When staking roadway alignment and stationing, the Contractor shall perform independent checks from different secondary control to ensure that the points staked are within the specified survey accuracy tolerances.

The Confederated Tribes of the Chehalis Reservation will provide AutoCad drawing files showing the horizontal and vertical alignments. The Contractor shall calculate coordinates for the alignment and develop his own staking sheets for the project. He shall provide a copy of the staking sheets to the Engineer prior to beginning excavation activities.

Contract work to be performed using contractor-provided stakes shall not begin until the stakes are approved by the Confederated Tribes of the Chehalis Reservation. Such approval shall not relieve the Contractor of responsibility for the accuracy of the stakes.

Stakes shall be provided to construct this project in accordance with the Plans. Additional stakes may be needed that are not described in the Plans; these additional stakes will be required but not limited to intersections and drainage. The Contractor shall thoroughly familiarize themselves with the plans to identify all additional staking not described in items 1 – 15 above.

Once the offset hubs have been set, the Contractor shall keep them accessible for use by the Confederated Tribes of the Chehalis Reservation. If hubs cannot be accessed due to spoil piles or equipment, the Contractor shall place additional hubs in a location acceptable to the Engineer. Side sewer stubs shall be staked before proceeding with the construction of affected sewer main.

The Contractor shall take as-built measurements of the location of all utility piping, conduit, and wire locations; all utility structure locations; and all changes in grade, slope and elevations. The measurements shall be neatly noted on a full size set of plans, the "Record Set". Transmittal of an accurate and complete Record Set to the Confederated Tribes of the Chehalis Reservation Project Engineer is required prior to Contract Completion.

Measurement

There is no specific measurement for Construction Surveying.

Payment

No separate payment will be made for Construction Surveying. All surveying required for furnishing all tools, labor, equipment, and materials required to provide surveying services for road and utility construction described by these specifications, in addition to taking and recording as-built measurements of constructed work, and re-establishing monuments disturbed by construction shall be incidental to other bid items.

1-05.7 Removal of Defective and Unauthorized Work *Supplement*

Section 1-05.7 is supplemented with the following:

If the Contractor fails to remedy defective or unauthorized work within the time specified in a written notice from the Engineer, or fails to perform any part of the work required by the Contract Documents, the Engineer may correct and remedy such work as may be identified in the written notice, with the Confederated Tribes of the Chehalis Reservation forces or by such other means as the Confederated Tribes of the Chehalis Reservation may deem necessary.

If the Contractor fails to comply with a written order to remedy what the Engineer determines to be an emergency situation, the Engineer may have the defective and unauthorized work corrected immediately, have the rejected work removed and replaced, or have work the Contractor refuses to perform completed by using the Confederated Tribes of the Chehalis Reservation or other forces. An emergency situation is any situation when, in the opinion of the Engineer, a delay in its remedy could be potentially unsafe, or might cause serious risk of loss or damage to the public.

Direct or indirect costs incurred by the Confederated Tribes of the Chehalis Reservation attributable to correcting and remedying defective or unauthorized work, or work the Contractor failed or refused to perform, shall be paid by the Contractor. Payment will be deducted by the Engineer from monies due, or to become due, the Contractor. Such direct and indirect costs shall include in particular, but without limitation, compensation for additional professional services required, and costs for repair and replacement of work of others destroyed or damaged by correction, removal, or replacement of the Contractor's unauthorized work.

No adjustment in contract time or compensation will be allowed because of the delay in the performance of the work attributable to the exercise of the Confederated Tribes of the Chehalis Reservation's rights provided by this Section.

The rights exercised under the provisions of this section shall not diminish the Confederated Tribes of the Chehalis Reservation's right to pursue any other avenue for additional remedy or damages with respect to the Contractor's failure to perform the work as required.

1-05.10(1) Two-Year Guarantee Period

The Contractor shall return to the project and repair or replace all defects in workmanship and material discovered within two years after Final Acceptance of the Work. The Contractor shall start work to remedy any such defects within 7 calendar days of receiving the Confederated Tribes of the Chehalis Reservation's written notice of a defect, and shall complete such work within the time stated in the Confederated Tribes of the Chehalis Reservation's notice. In case of an emergency, where damage may result from delay or where loss of Confederated Tribes of the Chehalis Reservation's services may result, such corrections may be made by the Confederated Tribes of the Chehalis Reservation's own forces or another contractor, in which case the cost of corrections shall be paid by the Contractor. In the event the Contractor does not accomplish corrections within the time specified, the work will be otherwise accomplished and the cost of same shall be paid by the Contractor.

When corrections of defects are made, the Contractor shall then be responsible for correcting all defects in workmanship and materials in the corrected work for one year after acceptance of the corrections by Confederated Tribes of the Chehalis Reservation.

This guarantee is supplemental to and does not limit or affect the requirements that the Contractor's work comply with the requirements of the Contract or any other legal rights or remedies of the Confederated Tribes of the Chehalis Reservation.

1-05.11 Final Inspection *Replacement*

Section 1-05.11 including title is deleted and replaced with the following:

1-05.11 Final Inspections and Operational Testing

1-05.11(1) Substantial Completion Date

When the Contractor considers the work to be substantially complete, the Contractor shall so notify the Engineer and request the Engineer establish the Substantial Completion Date. The Contractor's request shall list the specific items of work that remain to be completed in order to reach physical completion. The Engineer will schedule an inspection of the work with the Contractor to determine the status of completion. The Engineer may also establish the Substantial Completion Date unilaterally.

If, after this inspection, the Engineer concurs with the Contractor that the work is substantially complete and ready for its intended use, the Engineer, by written notice to the Contractor, will set the Substantial Completion Date. If, after this inspection the Engineer does not consider the work substantially complete and ready for its intended use, the Engineer will, by written notice, so notify the Contractor giving the reasons therefore.

Upon receipt of written notice concurring in or denying substantial completion, whichever is applicable, the Contractor shall pursue vigorously, diligently and without unauthorized interruption, the work necessary to reach Substantial and Physical Completion. The Contractor shall provide the Engineer with a revised schedule indicating when the Contractor expects to reach substantial and physical completion of the work.

The above process shall be repeated until the Engineer establishes the Substantial Completion Date and the Contractor considers the work physically complete and ready for final inspection. Contract Time will continue until such time that the Engineer determines that Substantial Completion has been reached. Upon reaching Substantial Completion the Engine will prepare a list of remaining work (punchlist) that must be completed to reach Physical Completion. Contract Time will not be counted between the date of Substantial Completion and the date the punchlist has been issued.

1-05.11(2) Final Inspection and Physical Completion Date

The Contractor will have 10 working days to complete the punchlist items and reach Physical Completion. After 10 days if the Contractor has not reached Physical Completion and all items on the punchlist have been completed to the satisfaction of the Engineer and the Confederated Tribes of the Chehalis Reservation Contract Time will be restarted and will continue to run until Physical Completion has been achieved. When the Contractor considers the work physically complete and ready for final inspection, the Contractor by written notice, shall request the Engineer to schedule a final inspection. The Engineer will set a date for final inspection. The Engineer and the Contractor will then make a final inspection and the Engineer will notify the Contractor in writing of all particulars in which the final inspection reveals the work incomplete or unacceptable. The Contractor shall immediately take such corrective measures as are necessary to remedy the listed deficiencies. Corrective work shall be pursued vigorously, diligently, and without interruption until physical completion of the listed deficiencies. This process will continue until the Engineer is satisfied the listed deficiencies have been corrected.

If action to correct the listed deficiencies is not initiated within 7 days after receipt of the written notice listing the deficiencies, the Engineer may, upon written notice to the Contractor, take whatever steps are necessary to correct those deficiencies pursuant to Section 1-05.7. The Contractor will not be allowed an extension of contract time because of a delay in the performance of the work attributable to the exercise of the Engineer's right hereunder.

Upon correction of all deficiencies, the Engineer will notify the Contractor and the Confederated Tribes of the Chehalis Reservation, in writing, of the date upon which the work was considered physically complete. That date shall constitute the Physical Completion Date of the contract, but shall not imply acceptance of the work or that all the obligations of the Contractor under the contract have been fulfilled.

1-05.11(3) Operational Testing

It is the intent of the Confederated Tribes of the Chehalis Reservation to have at the Physical Completion Date a complete and operable system. Therefore, when the work involves the installation of machinery or other mechanical equipment; street lighting, electrical distribution or signal systems; irrigation systems; buildings; or other similar work it may be desirable for the Engineer to have the Contractor operate and test the work for a period of time after final inspection but prior to the physical completion date. Whenever items of work are listed in the Contract Provisions for operational testing they shall be fully tested under operating conditions for the time period specified to ensure their acceptability prior to the Physical Completion Date. During and following the test period, the Contractor shall correct any items of workmanship, materials, or equipment which prove faulty, or that are not in first class operating condition. Equipment, electrical controls, meters, or other devices and equipment to be tested during this period shall be tested under the observation of the Engineer, so that the Engineer may determine their suitability for the purpose for which they were installed. The Physical Completion Date cannot be established until testing and corrections have been completed to the satisfaction of the Engineer.

The costs for power, gas, labor, material, supplies, and everything else needed to successfully complete operational testing, shall be included in the unit contract prices related to the system being tested, unless specifically set forth otherwise in the proposal. Operational and test periods, when required by the Engineer, shall not affect a manufacturer's guaranties or warranties furnished under the terms of the contract.

1-05.13 Superintendents, Labor and Equipment of Contractor *Revision*

The fourth and fifth sentence of the second paragraph in Section 1-05.13 is revised to read:

The prime contractor shall have a superintendent or a person with authority over the project, on-site during the hours of work per 1-08.0(2) and during any additional approved work hours. Any superintendent who fails to follow the Engineer's written directions, instructions, or determinations;

or who is found to not be physically present on the jobsite during the approved hours of work hours; maybe subject to removal from the project. Upon the written request of the Engineer, the Contractor shall immediately remove such superintendent and name a replacement in writing. The Engineer may direct the Contractor to stop work until a new Superintendent can be installed who is physically present on the job site. The resulting period of work stoppage shall be counted as working days.

Delete the sixth and seventh paragraphs of this section.

1-05.14 Cooperation With Other Contractors *Supplement*

Section 1-05.14 is supplemented with the following:

Other Contracts Or Other Work
It is anticipated that the following work adjacent to or within the limits of this project will be performed by others during the course of this project and will require coordination of the work:

Anderson Street Widening Project

1-05.15 Method of Serving Notices *Supplement*

The second paragraph of Section 1-05.15 is revised to read:

All correspondence from the Contractor shall be directed to the Project Manager. All correspondence from the Contractor constituting any notification, notice of protest, notice of dispute, or other correspondence constituting notification required to be furnished under the Contract, must be in paper format, hand delivered, via mail delivery service or by email to the Project Manager's office (Bvoncluck@chehalistribe.org). Electronic copies such as e-mails or electronically delivered copies of correspondence will not constitute such notice and will not comply with the requirements of the Contract.

1-05.16 Water and Power *New Section*

Add the following new section:

1-05.16 Water and Power

The Contractor shall make necessary arrangements, and shall bear the costs for power and water necessary for the performance of the work, unless the contract includes power and water as a pay item.

1-06 CONTROL OF MATERIAL

Section 1-06 is supplemented with the following:

Use of American Iron and Steel
Use of American iron and steel is required. The requirements are described within the Washington State Department of Ecology Specifications Insert included in these Documents.

1-06.1 Approval of Materials Prior to Use

1-06.1(4) Fabrication Inspection Expense *Deletion*

Delete this section in its entirety

1-06.2 Acceptance of Materials

1-06.2(1) Samples and Tests for Acceptance *Supplement*

Section 1-06.2(1) is supplement with the following:

The Contractor shall submit a written request to the Confederated Tribes of the Chehalis Reservation two working days in advance, when a material is ready for acceptance tests. The request shall include the type of materials and the locations ready to be tested

The Confederated Tribes of the Chehalis Reservation will provide testing services through a certified testing firm and laboratory. The Confederated Tribes of the Chehalis Reservation will schedule one material testing service site visit per day. The definition of a site visit is the time necessary to complete all available acceptance testing per the contractor's request. The Confederated Tribes of the Chehalis Reservation's onsite representative, will determine when all active acceptance testing is complete and release the material tester for the day.

The Contractor may request more than two site visits per working day, each additional site visit a deduction for the material tester's mobilization will be made at $200.00 per site visit. The deduction(s) will be subtracted from any money due or coming due to the Contractor.

Failure to have the areas and materials ready for acceptance testing as requested may result in the release of the material tester for the day.

1-06.6 Recycled Materials *Replacement*

Section 1-06.6 is deleted and replaced with the following

The Contractor shall make their best effort to utilize recycled materials in the construction of the project. Approval of such material use shall be as detailed elsewhere in the Standard Specifications.

Prior to Physical Completion the Contractor shall report the quantity of recycled materials that were utilized in the construction of the project for each of the items listed in Section 9-03.21. The report shall include hot mix asphalt, recycled concrete aggregate, recycled glass, steel furnace slag and other recycled materials (e.g. utilization of on-site material and aggregates from concrete returned to the supplier). The Contractor's report shall be provided on DOT form 350-075 Recycled Materials Reporting.

1-08 PROSECUTION AND PROGRESS

Add the following new Section:

SECTION 1-08.3(2)E WEEKLY PROGRESS MEETINGS

A. The Owner will conduct weekly progress meetings with Contractor at job site. Attendance is required by Contractor's project manager and superintendent and affected Subcontractors if necessary or appropriate. The Owner will prepare, maintain and distribute agenda and dated record of: (1) actions required and taken and (2) decisions needed and made.

B. Agenda:
   1. Review critical items/action list.
   2. Review work progress. Compare actual and projected progress with Contractor's Construction Schedule, propose methods to correct deficiencies.
   3. Review status of Submittals; review delivery dates and date of need for critical items.
   4. Review coordination problems.
   5. Review adherence to DOE funding requirements.
   6. Schedule needed testing and critical inspections.
   7. Discuss impact of proposed changes on progress Schedule.

8. Other business.

1-07 LEGAL RELATIONS AND RESPONSIBILITIES TO THE PUBLIC

1-07.1 Laws to be Observed *Supplement*

Section 1-07.1 is supplemented with the following:

In cases of conflict between different safety regulations, the more stringent regulation shall apply.

The Washington State Department of Labor and Industries shall be the sole and paramount administrative agency responsible for the administration of the provisions of the Washington Industrial Safety and Health Act of 1973 (WISHA).

The Contractor shall maintain at the project site office, or other a well-known place at the project site, all articles necessary for providing first aid to the injured. The Contractor shall establish, publish, and make known to all employees, procedures for ensuring immediate removal to a hospital, or doctor's care, persons, including employees, who may have been injured on the project site. Employees should not be permitted to work on the project site before the Contractor has established and made known procedures for removal of injured persons to a hospital or a doctor's care.

The Contractor shall have sole responsibility for the safety, efficiency, and adequacy of the Contractor's plant, appliances, and methods, and for any damage or injury resulting from their failure, or improper maintenance, use, or operation. The Contractor shall be solely and completely responsible for the conditions of the project site, including safety for all persons and property in the performance of the work. This requirement shall apply continuously, and not be limited to normal working hours. The required or implied duty of the Engineer to conduct construction review of the Contractor's performance does not, and shall not, be intended to include review and adequacy of the Contractor's safety measures in, on, or near the project site.

Supplement

Confined Space

Confined spaces are known to exist at the following locations:

- Pumping Chambers and Manholes

The Contractor shall be fully responsible for the safety and health of all on-site workers and compliant with Washington Administrative Code (WAC 296-809).

The Contractor shall prepare and implement a confined space program for each of the confined spaces identified above. The Contractors Confined Space program shall be sent to the Confederated Tribes of the Chehalis Reservation at least 30 days prior to the Contractor beginning work in or adjacent to the confined space. No work shall be performed in or adjacent to the confined space until the plan is submitted to the Engineer as required. The Contractor shall communicate with the Project Engineer to ensure a coordinated effort for providing and maintaining a safe worksite for both the Confederated Tribes of the Chehalis Reservation's and Contractor's workers when working in or near a confined space.

All costs to prepare and implement the confined space program shall be included in the bid prices for the various items associated with the confined space work.

1-07.2 Taxes *Supplement*

*Section 1-07.*2, including its sub-sections, in its entirety, is replaced with the following:

State Sales tax and Tribal taxes will not be charged on this project

1-07.6 Permits and Licenses

Section 1-07.6, including its sub-sections, in its entirety, is replaced with the following:

Contractor and any sub-contractor working on the site is required to obtain and keep current a Tribal business license throughout the duration of the project. Business licenses can be obtained on-line at the following link:
http://www.chehalistribe.org/departments/planning-department/purchase-business-license-online/

Contractor shall obtain all necessary permits and give any notices these call for. Contractor shall be responsible for the cost of all required permits and licenses required. No separate payment will be made for obtaining the required permits and licenses.

1-07.5 Environmental Regulations *Supplement*

1-07.5(1) General

Section 1-07.5(1) is supplemented with the following:

All work related to this project that is located off Tribal Lands is subject to all applicable State regulations, laws and requirements.

All work related to this project that is located on Chehalis Tribal Lands shall comply with Chehalis Tribal Code Title 11 and other Tribal environmental regulations.

Protection of the Environment: No construction related activity shall contribute to the degradation of the environment, allow material to enter surface or ground waters, or allow particulate emissions to the atmosphere, which exceed state or federal standards. Any actions that potentially allow a discharge to state waters must have prior approval of the Washington State Department of Ecology.

Contractor shall provide silt fencing and other best management practices to prevent silt and excavated material from leaving the site and to prevent erosion of the work area and surrounding properties.

1-07.7 Load Limits *Supplement*

Section 1-07.7 is supplemented with the following:

If the sources of materials provided by the Contractor necessitates hauling over roads other than State Highways, the Contractor shall, at the Contractor's expense, make all arrangements for the use of the haul routes.

1-07.9 Wages

1-07.9(1) General *Supplement*

Section 1-07.9(1) is supplemented with the following:

The Successful bidder will be required to conform to the wage requirements prescribed by the federal Davis-Bacon and Relate Acts which requires that all laborers and mechanics employed by contractors and subcontractors performing on contracts funded in whole or in part by SRF appropriations in excess of $2000 pay their laborers and mechanics not less than the prevailing wage rates and fringe benefits, and determined by the Secretary of Labor, for corresponding classes of laborers and mechanics employed on similar projects in the area.

The Federal wage rates incorporated in this contract have been established by the Secretary of Labor under United States Department of Labor General Decision No. WA20200051.

The State rates incorporated in this contract are applicable to all construction activities associated with this contract.

Unions and other labor organizations are required to comply with all applicable Chehalis Tribal ordinances.

Application of Wage Rates for the Occupation of Landscape Construction
State prevailing wage rates for public works contracts are included in this contract and show a separate listing for the occupation:

> Landscape Construction, which includes several different occupation descriptions such as: Irrigation and Landscape Plumbers, Irrigation and Landscape Power Equipment Operators, and Landscaping or Planting Laborers.

In addition, federal wage rates that are included in this contract may also include occupation descriptions in Federal Occupational groups for work also specifically identified with landscaping such as:

> Laborers with the occupation description, Landscaping or Planting, or
>
> Power Equipment Operators with the occupation description, Mulch Seeding Operator.

If Federal wage rates include one or more rates specified as applicable to landscaping work, then Federal wage rates for all occupation descriptions, specific or general, must be considered and compared with corresponding State wage rates. The higher wage rate, either State or Federal, becomes the minimum wage rate for the work performed in that occupation.

Contractors are responsible for determining the appropriate crafts necessary to perform the contract work. If a classification considered necessary for performance of the work is missing from the Federal Wage Determination applicable to the contract, the Contractor shall initiate a request for approval of a proposed wage and benefit rate. The Contractor shall prepare and submit Standard Form 1444, Request for Authorization of Additional Classification and Wage Rate available at http://www.wdol.gov/docs/sf1444.pdf, and submit the completed form to the Engineer's office. The presence of a classification wage on the Washington State Prevailing Wage Rates For Public Works Contracts does not exempt the use of form 1444 for the purpose of determining a federal classification wage rate.

1-07.9(5) Required Documents *Supplement*

Section 1-07.9(5) is replaced with the following:

General
All "Statements of Intent to Pay Prevailing Wages", "Affidavits of Wages Paid" and Certified Payrolls, including a signed Statement of Compliance for Federal-aid projects, shall be submitted to the Engineer and the State L&I online Prevailing Wage Intent & Affidavit (PWIA) system.

Intents and Affidavits
On forms provided by the Industrial Statistician of State L&I, the Contractor shall submit to the Engineer the following for themselves and for each firm covered under RCW 39.12 that will or has provided Work and materials for the Contract:

1. The approved "Statement of Intent to Pay Prevailing Wages" State L&I's form number F700-029-000. The Confederated Tribes of the Chehalis Reservation will make no

payment under this Contract until this statement has been approved by State L&I and reviewed by the Engineer.

2. The approved "Affidavit of Prevailing Wages Paid", State L&I's form number F700-007-000. The Confederated Tribes of the Chehalis Reservation will not grant Completion until all approved Affidavit of Wages paid for the Contractor and all Subcontractors have been received by the Engineer. The Confederated Tribes of the Chehalis Reservation will not release to the Contractor any funds retained under RCW 60.28.011 until "Affidavit of Prevailing Wages Paid" forms have been approved by State L&I and all of the approved forms have been submitted to the Engineer for every firm that worked on the Contract.

The Contractor is responsible for requesting these forms from State L&I and for paying any fees required by State L&I.

Certified Payrolls

Certified payrolls are required to be submitted by the Contractor for themselves, all Subcontractors and all lower tier subcontractors. The payrolls shall be submitted weekly on all Federal-aid projects and no less than monthly on State funded projects.

Penalties for Noncompliance

The Contractor is advised, if these payrolls are not supplied within the prescribed deadlines, any or all payments may be withheld until compliance is achieved. In addition, failure to provide these payrolls may result in other sanctions as provided by State laws (RCW 39.12.050) and/or Federal regulations (29 CFR 5.12).

1-07.11 Requirements for Nondiscrimination *Supplement*

Section 1-07.11 is supplemented with the following:

Disadvantage Business Enterprises

The requirements for use of Disadvantage Business Enterprises is outlined in the Washington State Department of Ecology Specifications Insert included in these Documents. In the case of discrepancies between the Standard Specifications and the Specification Insert the Specification Insert shall govern.

Equal Opportunity (EEO)

The requirements for Equal Opportunity is outlined in the Washington State Department of Ecology Specifications Insert included in these Documents. In the case of discrepancies between the Standard Specifications and the Specification Insert the Specification Insert shall govern.

1-07.13 Contractors' Responsibility for Work

1-07.13(4) Repair of Damage *Replace*

Section 1-07.13(4) is revised to read:

The Contractor shall promptly repair all damage to either temporary or permanent work as directed by the Engineer. For damage qualifying for relief under Sections 1-07.13(1), 1-07.13(2) or 1-07.13(3), payment will be made in accordance with Section 1-04.4. Payment will be limited to repair of damaged work only. No payment will be made for delay or disruption of work.

1-07.15 Temporary Water Pollution Prevention

1-07.15(1) Spill Prevention, Control, and Countermeasures Plan *Supplement*

Delete the last six paragraphs and add:

Payment

No separate payment will be made for the required SPCC Plan. Preparing and submitting the plan shall be incidental to other bid items.

1-07.17 Utilities and Similar Facilities *Supplement*

Section 1-07.17 is supplemented with the following:

Locations and dimensions shown in the Plans for existing facilities are in accordance with available information obtained without uncovering, measuring, or other verification.

The following addresses and telephone numbers of utility companies known or suspected of having facilities within the project limits are supplied for the Contractor's convenience:

Call Before you Dig On Call Center Ph. 811	ELECTRICITY PSE 712 Legion Way, SE Olympia, WA. 98501 (888) 225-5773
SEWER The Confederated Tribes of the Chehalis Reservation – Josh Doolin 12633 118th SW Rochester, WA. 98568 (564) 999-0510	TELEPHONE Century Link (360) 339-4055
WATER The Confederated Tribes of the Chehalis Reservation – Tom Hayden 9 Niederman Road Oakville, WA. 98568 (360) 338-2516	CABLE Xfinity 2915 Harrison Ave NW, Ste. 200 Olympia, WA. 98502 (800) 934-6489
ELECTRICITY Grays Harbor PUD 2720 Sumner Ave. Aberdeen, WA. 98520 (800) 562-7726	FIBER OPTICS Xfinity2915 Harrison Ave NW, Ste. 200 Olympia, WA. 98502 (800) 934-6489

1-07.18 Public Liability and Property Damage Insurance *Replacement*

Delete this section in its entirety, and replace it with the following:

1-07.18 Insurance

1-07.18(1) General Requirements

A. The Contractor shall procure and maintain the insurance described in all subsections of section 1-07.18 of these Special Provisions, from insurers with a current A. M. Best rating of not less than A-: VII and licensed to do business in the State of Washington. The Confederated Tribes of the Chehalis Reservation reserves the right to approve or reject the insurance provided, based on the insurer's financial condition.

B. The Contractor shall keep this insurance in force without interruption from the commencement of the Contractor's Work through the term of the Contract and for thirty (30) days after the Physical Completion date, unless otherwise indicated below.

C. If any insurance policy is written on a claims made form, its retroactive date, and that of all subsequent renewals, shall be no later than the effective date of this Contract. The policy

shall state that coverage is claims made, and state the retroactive date. Claims-made form coverage shall be maintained by the Contractor for a minimum of 36 months following the Completion Date or earlier termination of this Contract, and the Contractor shall annually provide the Confederated Tribes of the Chehalis Reservation with proof of renewal. If renewal of the claims made form of coverage becomes unavailable, or economically prohibitive, the Contractor shall purchase an extended reporting period ("tail") or execute another form of guarantee acceptable to the Confederated Tribes of the Chehalis Reservation to assure financial responsibility for liability for services performed.

D. The Contractor's Automobile Liability, Commercial General Liability and Excess or Umbrella Liability insurance policies shall be primary and non-contributory insurance as respects the Confederated Tribes of the Chehalis Reservation's insurance, self-insurance, or self-insured pool coverage. Any insurance, self-insurance, or self-insured pool coverage maintained by the Confederated Tribes of the Chehalis Reservation shall be excess of the Contractor's insurance and shall not contribute with it.

E. The Contractor shall provide the Confederated Tribes of the Chehalis Reservation and all additional insureds with written notice of any policy cancellation, within two business days of their receipt of such notice.

F. The Contractor shall not begin work under the Contract until the required insurance has been obtained and approved by the Confederated Tribes of the Chehalis Reservation

G. Failure on the part of the Contractor to maintain the insurance as required shall constitute a material breach of contract, upon which the Confederated Tribes of the Chehalis Reservation may, after giving five business days' notice to the Contractor to correct the breach, immediately terminate the Contract or, at its discretion, procure or renew such insurance and pay any and all premiums in connection therewith, with any sums so expended to be repaid to the Confederated Tribes of the Chehalis Reservation on demand, or at the sole discretion of the Confederated Tribes of the Chehalis Reservation, offset against funds due the Contractor from the Confederated Tribes of the Chehalis Reservation.

H. All costs for insurance shall be incidental to and included in the unit or lump sum prices of the Contract and no additional payment will be made.

1-07.18(2) Additional Insured

All insurance policies, with the exception of Workers Compensation, and of Professional Liability and Builder's Risk (if required by this Contract) shall name the following listed entities as additional insured(s) using the forms or endorsements required herein:

- The Confederated Tribes of the Chehalis Reservation and its officers, elected officials, employees, agents, and volunteers
- Century West Engineering Corporation and its officers, employees, agents, and sub-consultants

The above-listed entities shall be additional insured(s) for the full available limits of liability maintained by the Contractor, irrespective of whether such limits maintained by the Contractor are greater than those required by this Contract, and irrespective of whether the Certificate of Insurance provided by the Contractor pursuant to 1-07.18(4) describes limits lower than those maintained by the Contractor.

For Commercial General Liability insurance coverage, the required additional insured endorsements shall be at least as broad as ISO forms CG 20 10 10 01 for ongoing operations and CG 20 37 10 01 for completed operations.

1-07.18(3) Subcontractors

The Contractor shall cause each Subcontractor of every tier to provide insurance coverage that complies with all applicable requirements of the Contractor-provided insurance as set forth herein, except the Contractor shall have sole responsibility for determining the limits of coverage required to be obtained by Subcontractors.

The Contractor shall ensure that all Subcontractors of every tier add all entities listed in 1-07.18(2) as additional insureds, and provide proof of such on the policies as required by that section as detailed in 1-07.18(2) using an endorsement as least as broad as ISO CG 20 10 10 01 for ongoing operations and CG 20 37 10 01 for completed operations.

Upon request by the Confederated Tribes of the Chehalis Reservation, the Contractor shall forward to the Confederated Tribes of the Chehalis Reservation evidence of insurance and copies of the additional insured endorsements of each Subcontractor of every tier as required in 1-07.18(4) Verification of Coverage.

1-07.18(4) Verification of Coverage

The Contractor shall deliver to the Confederated Tribes of the Chehalis Reservation a Certificate(s) of Insurance and endorsements for each policy of insurance meeting the requirements set forth herein when the Contractor delivers the signed Contract for the work. Failure of the Confederated Tribes of the Chehalis Reservation to demand such verification of coverage with these insurance requirements or failure of the Confederated Tribes of the Chehalis Reservation to identify a deficiency from the insurance documentation provided shall not be construed as a waiver of Contractor's obligation to maintain such insurance.

Verification of coverage shall include:

1. An ACORD certificate or a form determined by the Confederated Tribes of the Chehalis Reservation to be equivalent.
2. Copies of all endorsements naming The Confederated Tribes of the Chehalis Reservation and all other entities listed in 1-07.18(2) as additional insured(s), showing the policy number. The Contractor may submit a copy of any blanket additional insured clause from its policies instead of a separate endorsement.
3. Any other amendatory endorsements to show the coverage required herein.
4. A notation of coverage enhancements on the Certificate of Insurance shall <u>not</u> satisfy these requirements – actual endorsements must be submitted.

Upon request by the Confederated Tribes of the Chehalis Reservation, the Contractor shall forward to the Confederated Tribes of the Chehalis Reservation a full and certified copy of the insurance policy(s). If Builders Risk insurance is required on this Project, a full and certified copy of that policy is required when the Contractor delivers the signed Contract for the work.

1-07.18(5) Coverages and Limits

The insurance shall provide the minimum coverages and limits set forth below. Contractor's maintenance of insurance, its scope of coverage, and limits as required herein shall not be construed to limit the liability of the Contractor to the coverage provided by such insurance, or otherwise limit the Confederated Tribes of the Chehalis Reservation's recourse to any remedy available at law or in equity.

All deductibles and self-insured retentions must be disclosed and are subject to approval by the Confederated Tribes of the Chehalis Reservation. The cost of any claim payments falling within the deductible or self-insured retention shall be the responsibility of the Contractor. In the event an additional insured incurs a liability subject to any policy's deductibles or self-insured retention, said deductibles or self-insured retention shall be the responsibility of the Contractor.

1-07.18(5)A Commercial General Liability

Commercial General Liability insurance shall be written on coverage forms at least as broad as ISO occurrence form CG 00 01, including but not limited to liability arising from premises, operations, stop gap liability, independent contractors, products-completed operations, personal and advertising injury, and liability assumed under an insured contract. There shall be no exclusion for liability arising from explosion, collapse or underground property damage.

The Commercial General Liability insurance shall be endorsed to provide a per project general aggregate limit, using ISO form CG 25 03 05 09 or an equivalent endorsement.

Contractor shall maintain Commercial General Liability Insurance arising out of the Contractor's completed operations for at least three years following Substantial Completion of the Work.

Such policy must provide the following minimum limits:

$1,000,000	Each Occurrence
$2,000,000	General Aggregate
$2,000,000	Products & Completed Operations Aggregate
$1,000,000	Personal & Advertising Injury each offence
$1,000,000	Stop Gap / Employers' Liability each accident
$50,000	Damages to Rented Premises

1-07.18(5)B Automobile Liability

Automobile Liability shall cover owned, non-owned, hired, and leased vehicles; and shall be written on a coverage form at least as broad as ISO form CA 00 01. If the work involves the transport of pollutants, the automobile liability policy shall include MCS 90 and CA 99 48 endorsements.

Such policy must provide the following minimum limit:

$1,000,000	Combined single limit each accident
	Any Automobile, Hired & Non-Owned Automobiles.

1-07.18(5)C Workers' Compensation

The Contractor shall comply with Workers' Compensation coverage as required by the Industrial Insurance laws of the State of Washington as evidenced by a Certificate of Insurance from the State of Washington Department of Labor and Industries during the period of this contract.

1-07.18(5)D Washington Stop Gap (Employers Liability)

$1,000,000	Per Accident
$1,000,000	Disease
$1,000,000	Each Employee

1-07.18(6) Indemnification

The Contractor shall indemnify, defend, and hold the Confederated Tribes of the Chehalis Reservation harmless from and against all liability, claims, or actions, based upon or arising out of injuries, to include death resulting therefore, or damages to persons or property caused by or sustained in connection with the performance of any work pursuant to this contract, to include work accomplished by any subcontractor of the Contractor herein, and except as may be caused solely by the negligence of the Owner to the extent allowed by State law.

The Contractor shall further indemnify, defend, and hold the Confederated Tribes of the Chehalis Reservation harmless from and against all liability, claims, and actions, to include liability, claims and actions brought against the Contractor's employees, subcontractors, and employees of subcontractors, based upon or arising out of injuries, to include injuries, death, damages to persons or property, caused by or resulting from the negligence and/or concurrent negligence of

the Contractor, or the Contractor's agents, employees, subcontractors, or employees of the subcontractors.

To the extent permitted by applicable law, the Contractor further agrees to indemnify, defend, and hold the The Confederated Tribes of the Chehalis Reservation harmless from and against all claims, actions, or liability for injuries, death, damages, or benefits, arising out of, or which may be awarded pursuant to Worker's Compensation and/or Employer's Liability laws, including but not limited to any claims asserted by or on behalf of an employee of the Contractor, by a subcontractor, or by a subcontractor employee.

The Contractor, the Confederated Tribes of the Chehalis Reservation specifically warrant that the foregoing indemnity provisions are the subject of explicit negotiation by the parties, and are specifically and expressly agreed to in consideration of the mutual benefits derived under the terms of the contract herein.

1-07.22 Use of Explosives *Replacement*

Section 1-07.22 is deleted and replaced with the following:

Blasting is not allowed on Confederated Tribes of the Chehalis Reservation public works projects. Rock excavation shall be accomplished by other methods.

1-07.23 Public Convenience and Safety

1-07.23(1) Construction Under Traffic *Supplement*

The second paragraph of Section 1-07.23(1) is supplemented with the following:

6. Adjacent Property Access

When a property has two or more driveway approaches, the Contractor shall always provide vehicular access to at least one driveway. When a property has only one driveway approach, the Contractor shall notify the business or property owner at least two days in advance of any temporary construction closure. Access to all residences shall not be closed prior to 7:00 AM and shall be restored by 5:00 PM, each day. Access to any business shall not be closed more than two hours during any day.

Section 1-07.23(1) is supplemented with the following:

Work Zone Clear Zone
The Work Zone Clear Zone (WZCZ) applies during working and nonworking hours. The WZCZ applies only to temporary roadside objects introduced by the Contractor's operations and does not apply to preexisting conditions or permanent Work. Those work operations that are actively in progress shall be in accordance with adopted and approved Traffic Control Plans, and other contract requirements.

During nonworking hours equipment or materials shall not be within the WZCZ unless they are protected by permanent guardrail or temporary concrete barrier. The use of temporary concrete barrier shall be permitted only if the Engineer approves the installation and location.

During actual hours of work, unless protected as described above, only materials absolutely necessary to construction shall be within the WZCZ and only construction vehicles absolutely necessary to construction shall be allowed within the WZCZ or allowed to stop or park on the shoulder of the roadway.

The Contractor's nonessential vehicles and employees private vehicles shall not be permitted to park within the WZCZ at any time unless protected as described above.

Deviation from the above requirements shall not occur unless the Contractor has requested the deviation in writing and the Engineer has provided written approval.

Minimum WZCZ distances are measured from the edge of traveled way and will be determined as follows:

Regulatory Posted Speed	Distance From Traveled Way (Feet)
35 mph or less	10
40 mph	15
45 to 50 mph	20
55 to 60 mph	30
65 mph or greater	35

Minimum Work Zone Clear Zone Distance

Traffic control shall be set up in accordance with the Traffic Control Plans or other traffic control plans submitted to and approved by the Engineer.

Lane and road closures are subject to the following restrictions

- Contractor shall notify the Tribe's Project Manager; Brian von Clück by email at Bvancluck@chehalistribe.org 7 days in advance of any road or lane closures.

If the Engineer determines the permitted closure hours adversely affect traffic, the Engineer may adjust the hours accordingly. The Engineer will notify the Contractor in writing of any change in the closure hours.

Supplement

Garbage Collection

The Contractor shall be responsible for the coordination and scheduling of the garbage collection service with Waste Management during all lane or street closures. The Contractor's schedule shall not reduce the frequency of the existing garbage collection schedule at any time.

1-07.24 Rights of Way *Replacement*

Section 1-07.24 is deleted and replaced with the following:

Limits of construction permits are indicated in the Plans. The Contractor's construction activities shall be confined within these limits, unless arrangements for use of private property are made.

Generally, the Confederated Tribes of the Chehalis Reservation will have obtained, prior to bid opening, all rights of way and easements, both permanent and temporary, necessary for carrying out the work. Exceptions to this are noted in the Bid Documents or will be brought to the Contractor's attention by a duly issued Addendum.

Whenever any of the work is accomplished on or through property other than Tribal property, the Contractor shall meet and fulfill all covenants and stipulations of any easement agreement obtained by the Confederated Tribes of the Chehalis Reservation from the owner of the private property. Copies of the easement agreements may be included in the Contract Provisions or made available to the Contractor as soon as practical after they have been obtained by the Engineer.

Whenever easements or rights of entry have not been acquired prior to advertising, these areas are so noted in the Plans. The Contractor shall not proceed with any portion of the work in areas where right of way, easements or rights of entry have not been acquired until the Engineer certifies

to the Contractor that the right of way or easement is available or that the right of entry has been received. If the Contractor is delayed due to acts of omission on the part of the Confederated Tribes of the Chehalis Reservation in obtaining easements, rights of entry or right of way, the Contractor will be entitled to an extension of time. The Contractor agrees that such delay shall not be a breach of contract.

Each property owner shall be given 48 hours' notice prior to entry by the Contractor. This includes entry onto easements and private property where private improvements must be adjusted.

The Contractor shall be responsible for providing, without expense or liability to the Confederated Tribes of the Chehalis Reservation, any additional land and access thereto that the Contractor may desire for temporary construction facilities, storage of materials, or other Contractor needs. However, before using any private property, whether adjoining the work or not, the Contractor shall file with the Engineer a written permission of the private property owner, and, upon vacating the premises, a written release from the property owner of each property disturbed or otherwise interfered with by reasons of construction pursued under this contract. The statement shall be signed by the private property owner, or proper authority acting for the owner of the private property affected, stating that permission has been granted to use the property and all necessary permits have been obtained or, in the case of a release, that the restoration of the property has been satisfactorily accomplished. The statement shall include the parcel number, address, and date of signature. Written releases must be filed with the Engineer before the Completion Date will be established.

1-08 PROSECUTION AND PROGRESS

1-08.0 Preliminary Matters *New Section*

Add the following new sections:

1-08.0 Preliminary Matters

1-08.0(1) Preconstruction Conference

Prior to the Contractor beginning the work, a preconstruction conference will be held between the Contractor, the Engineer and such other interested parties as may be invited. The purpose of the preconstruction conference will be:

1. To review the initial progress schedule;
2. To establish a working understanding among the various parties associated or affected by the work;
3. To establish and review procedures for progress payment, notifications, approvals, submittals, etc.
4. To establish normal working hours for the work;
5. To review safety standards and traffic control; and
6. To discuss such other related items as may be pertinent to the work.

The Contractor shall prepare and submit at the preconstruction conference the following:

1. A breakdown of all lump sum items;
2. A preliminary schedule of working drawing submittals; and
3. A list of material sources for approval if applicable.

1-08.0(2) HOURS OF WORK

Except in the case of emergency or unless otherwise approved by the Confederated Tribes of the Chehalis Reservation, the normal straight time working hours for the contract shall be any consecutive 8-hour period between 7:00 a.m. and 6:00 p.m. of a working day with a maximum 1-hour lunch break and a 5-day work week. The normal straight time 8-hour working period for the

contract shall be established at the preconstruction conference or prior to the Contractor commencing the work.

If a Contractor desires to perform work on holidays, Saturdays, Sundays, or before 7:00 a.m. or after 6:00 p.m. on any day, the Contractor shall apply in writing to the Engineer for permission to work such times. Such requests shall be submitted to the Engineer 7 days prior to the day for which the Contractor is requesting permission to work.

Permission to work between the hours of 10:00 p.m. and 7:00 a.m. during weekdays and between the hours of 10:00 p.m. and 9:00 a.m. on weekends or holidays may also be subject to noise control requirements. Approval to continue work during these hours may be revoked at any time complaints are received from the public or adjoining property owners regarding the noise from the Contractor's operations. The Contractor shall have no claim for damages or delays should such permission be revoked for these reasons.

Permission to work Saturdays, Sundays, holidays or other than the agreed upon normal straight time working hours Monday through Friday may be given subject to certain other conditions set forth by the Confederated Tribes of the Chehalis Reservation or Engineer. These conditions may include but are not limited to: requiring the Engineer or such assistants as the Engineer may deem necessary to be present during the work; requiring the Contractor to reimburse the Confederated Tribes of the Chehalis Reservation for the costs in excess of straight-time costs for Confederated Tribes of the Chehalis Reservation employees who worked during such times; considering the work performed on Saturdays, Sundays, and holidays as working days with regards to the contract time; and considering multiple work shifts as multiple working days with respect to contract time even though the multiple shifts occur in a single 24-hour period. Assistants may include, but are not limited to, survey crews; personnel from the Confederated Tribes of the Chehalis Reservation's material testing lab; inspectors; and other Confederated Tribes of the Chehalis Reservation employees when in the opinion of the Engineer, such work necessitates their presence.

1-08.0(3) Reimbursement for Overtime Work of Confederated Tribes of the Chehalis Reservation Employees

Where the Contractor elects to work on a Saturday, Sunday, or holiday, or longer than an 8-hour work shift on a regular working day, as defined in the Standard Specifications, such work shall be considered as overtime work. On all such overtime work an inspector will be present, and a survey crew may be required at the discretion of the Engineer. In such case, the Confederated Tribes of the Chehalis Reservation may deduct from amounts due or to become due to the Contractor for the costs in excess of the straight-time costs for employees of the Confederated Tribes of the Chehalis Reservation required to work overtime hours.

The Contractor by these specifications does hereby authorize the Engineer to deduct such costs from the amount due or to become due to the Contractor.

1-08.1 Subcontracting *Revision*

Section 1-08.1 is supplemented with the following:

Prior to any subcontractor or lower tier subcontractor beginning work, the Contractor shall submit to the Engineer a certification (WSDOT Form 420-004) that a written agreement between the Contractor and the subcontractor or between the subcontractor and any lower tier subcontractor has been executed. This certification shall also guarantee that these subcontract agreements include all the documents required by these Contract Documents.

The ninth paragraph of Section 1-08.1 is supplemented with the following:

The Contractor shall certify to the actual amount received from the Confederated Tribes of the Chehalis Reservation and amounts paid to all firms that were used as Subcontractors, lower tier

subcontractors, manufacturers, regular dealers, or service providers on the Contract. This includes all Disadvantaged, Minority, Small, Veteran or Women's Business Enterprise firms. This Certification shall be submitted to the Engineer on a monthly basis each month between Execution of the Contract and Physical Completion of the Contract using the application available at: https://wsdot.diversitycompliance.com. A monthly report shall be submitted for every month between Execution of the Contract and Physical Completion regardless of whether payments were made or work occurred.

1-08.4 Prosecution of Work *Replacement*

Section 1-08.4 including title is deleted and replaced with the following:

1-08.4 Notice to Proceed and Prosecution of Work

Notice to Proceed will be given after the contract has been executed and the contract bond and evidence of insurance have been approved and filed by the Confederated Tribes of the Chehalis Reservation. The Contractor shall not commence with the work until the Notice to Proceed has been given by the Engineer. The Contractor shall commence construction activities on the project site within five (5) working days of the Notice to Proceed Date, unless otherwise approved in writing. The Contractor shall diligently pursue the work to the physical completion date within the time specified in the contract. Voluntary shutdown or slowing of operations by the Contractor shall not relieve the Contractor of the responsibility to complete the work within the time(s) specified in the contract.

When shown in the Plans, the first order of work shall be the installation of high visibility fencing to delineate all areas for protection or restoration, as described in the Contract. Installation of high visibility fencing adjacent to the roadway shall occur after the placement of all necessary signs and traffic control devices in accordance with 1-10.1(2). Upon construction of the fencing, the Contractor shall request the Engineer to inspect the fence. No other work shall be performed on the site until the Confederated Tribes of the Chehalis Reservation has accepted the installation of high visibility fencing, as described in the Contract.

1-08.5 Time for Completion *Modification*

Section 1-08.5 is supplemented with the following:

This project shall be physically completed within **<u>180</u>** working days.

Revise the third and fourth paragraphs of Section 1-08.5 to read:

<u>Contract time shall begin on the fifth working day following the Notice to Proceed Date or on the first working day the Contractor starts onsite work whichever occurs first</u>.

Each working day shall be charged to the contract as it occurs, until the contract work is physically complete. If substantial completion has been granted and all the authorized working days have been used, charging of working days will cease for 10 days after the punchlist has been issued. Each week the Engineer will provide the Contractor a statement that shows the number of working days: (1) charged to the contract the week before; (2) specified for the physical completion of the contract; and (3) remaining for the physical completion of the contract. The statement will also show the nonworking days and any partial or whole day the Engineer declares as unworkable. Within 10 calendar days after the date of each statement, the Contractor shall file a written protest of any alleged discrepancies in it. To be considered by the Engineer, the protest shall be in sufficient detail to enable the Engineer to ascertain the basis and amount of time disputed. By not

filing such detailed protest in that period, the Contractor shall be deemed as having accepted the statement as correct. If the Contractor is approved to work 10 hours a day and 4 days a week (a 4-10 schedule) and the fifth day of the week in which a 4-10 shift is worked would ordinarily be charged as a working day then the fifth day of that week will be charged as a working day whether or not the Contractor works on that day.

Revise the sixth paragraph of Section 1-08.5 to read:

The Engineer will give the Contractor written notice of the Completion Date of the contract after all the Contractor's obligations under the contract have been performed by the Contractor. The following events must occur before the Completion Date can be established:

1. The physical work on the project must be complete; and
2. The Contractor must furnish all documentation required by the contract and required by law, to allow the Confederated Tribes of the Chehalis Reservation to process final acceptance of the contract. The following documents must be received by the Project Engineer prior to establishing a completion date:
   a. Certified Payrolls (per Section 1-07.9(5)).
   b. Material Acceptance Certification Documents
   c. Monthly Reports of Amounts Credited as DBE Participation, as required by the Contract Provisions.
   d. Final Contract Voucher Certification
   e. Copies of the approved "Affidavit of Prevailing Wages Paid" for the Contractor and all Subcontractors
   f. Property owner releases per Section 1-07.24

1-08.9 Liquidated Damages *Revision*

Section 1-08.9 is revised to read:

Time is of the essence of the Contract. Delays inconvenience the traveling public, obstruct traffic, interfere with and delay commerce, and increase risk to Highway users. Delays also cost tax payers undue sums of money, adding time needed for administration, engineering, inspection, and supervision.

Accordingly, the Contractor agrees:

1. To pay liquidated damages in the amount of $1,000.00 for each working day beyond the number of working days established for Physical Completion, and
2. To authorize the Engineer to deduct these liquidated damages from any money due or coming due to the Contractor.

When the Contract Work has progressed to the extent that the The Confederated Tribes of the Chehalis Reservation has full use and benefit of the facilities, both from the operational and safety standpoint, all the initial plantings are completed and only minor incidental Work, replacement of temporary substitute facilities, plant establishment periods, or correction or repair remains to physically complete the total Contract, the Engineer may determine the Contract Work is substantially complete. The Engineer will notify the Contractor in writing of the Substantial Completion Date. For overruns in Contract time occurring after the date so established, liquidated damages shown above will not apply. For overruns in Contract time occurring after the Substantial Completion Date, liquidated damages shall be assessed at the daily rate specified above until the actual Physical Completion Date of all the Contract Work. The Contractor shall complete the remaining Work as promptly as possible. Upon request by the Engineer, the Contractor shall furnish a written schedule for completing the physical Work on the Contract.

Liquidated damages will not be assessed for any days for which an extension of time is granted. No deduction or payment of liquidated damages will, in any degree, release the Contractor from further obligations and liabilities to complete the entire Contract.

The fourth paragraph of Section 1-08.9 is revised to read:

When the Contract Work has progressed to Substantial Completion as defined in the Contract, the Engineer may determine that the work is Substantially Complete. The Engineer will notify the Contractor in writing of the Substantial Completion Date. For overruns in Contract time occurring after the date so established, the formula for liquidated damages shown above will apply.

1-09 Measurement and Payment

1-09.2 Weighing Equipment

1-09.2(1) General Requirements for Weighing Equipment *Modification*

Item 4 of the fifth paragraph of Section 1-09.2(1) is revised to read:

4. Test results and scale weight records for each day's hauling operations are provided to the Engineer daily. Reporting shall utilize WSDOT form 422-027, Scaleman's Daily Report, unless the printed ticket contains the same information that is on the Scaleman's Daily Report Form. The scale operator must provide AM and/or PM tare weights for each truck on the printed ticket.

1-09.7 Mobilization *Supplement*

Section 1-09.7 is supplemented with the following:

Payment will be made for each of the following bid items:

Mobilization	Lump Sum

1-09.9 Payments *Revision*

The first four paragraph of Section 1-09.9 is deleted and replaced with the following:

The basis of payment will be the actual quantities of Work performed according to the Contract and as specified for payment.

The Contractor shall submit a breakdown of the cost of lump sum bid items at the Preconstruction Conference, to enable the Project Engineer to determine the Work performed on a monthly basis. A breakdown is not required for lump sum items that include a basis for incremental payments as part of the respective Specification. Absent a lump sum breakdown, the Project Engineer will make a determination based on information available. The Project Engineer's determination of the cost of work shall be final.

Progress payments for completed work and material on hand will be based upon progress estimates prepared by the Engineer. A progress estimate cutoff date will be established at the preconstruction conference.

The initial progress estimate will be made not later than 30 days after the Contractor commences the work, and successive progress estimates will be made every month thereafter until the Completion Date. Progress estimates made during progress of the work are tentative, and made only for the purpose of determining progress payments. The progress estimates are subject to change at any time prior to the calculation of the final payment.

The value of the progress estimate will be the sum of the following:

1. Unit Price Items in the Bid Form — the approximate quantity of acceptable units of work completed multiplied by the unit price.
2. Lump Sum Items in the Bid Form — based on the approved Contractor's lump sum breakdown for that item, or absent such a breakdown, based on the Engineer's determination.
3. Materials on Hand — 100 percent of invoiced cost of material delivered to Job site or other storage area approved by the Engineer.
4. Change Orders — entitlement for approved extra cost or completed extra work as determined by the Engineer.

Progress payments will be made in accordance with the progress estimate less:

1. Retainage per Section 1-09.9(1).
2. The amount of progress payments previously made; and
3. Funds withheld by the The Confederated Tribes of the Chehalis Reservation for disbursement in accordance with the Contract Documents.

Progress payments for work performed shall not be evidence of acceptable performance or an admission by the The Confederated Tribes of the Chehalis Reservation that any work has been satisfactorily completed. The determination of payments under the contract will be final in accordance with Section 1-05.1.

1-09.9(1) Retainage *Replacement*

Section 1-09.9(1) including title is deleted and replaced with the following:

A sum of 5 percent of the monies earned by the Contractor will be retained from progress estimates. Such retainage shall be used as a trust fund for the protection and payment the claims of any person arising under the Contract. Release of the retainage will be made 60 days following the Completion Date provided the following conditions are met:

1. Affidavits of Wages Paid for the Contractor and all Subcontractors are on file with the The Confederated Tribes of the Chehalis Reservation.

2. A certificate of Payment of Contributions Penalties and Interest on Public Works Contract is received from the Washington State Employment Security Department.

3. Washington State Department of Labor and Industries (in accordance with Section 1-07.10) shows the Contractor is current with payments of industrial insurance and medical aid premiums.

4. All claims, as provided by law, filed against the retainage have been resolved. In the event claims are filed and provided the conditions of 1, 2, and 3 are met, the Contractor will be paid such retained percentage less an amount sufficient to pay any such claims together with a sum determined by the The Confederated Tribes of the Chehalis Reservation sufficient to pay the cost of foreclosing on claims and to cover attorney's fees.

1-09.11 Disputes and Claims

1-09.11(3) Time Limitation and Jurisdiction *Replacement*

Section 1-09.11(3) is revised to read*:*

For the convenience of the parties to the Contract it is mutually agreed by the parties that any claims or causes of action which the Contractor has against the Confederated Tribes of the Chehalis Reservation arising from the Contract shall be brought within 180 calendar days from the date of final acceptance (Section 1-05.12) of the Contract by the Confederated Tribes of the Chehalis Reservation; and it is further agreed that any such claims or causes of action shall be brought only in the Chehalis Tribal Court The parties understand and agree that the Contractor's failure to bring suit within the time period provided, shall be a complete bar to any such claims or causes of action. It is further mutually agreed by the parties that when any claims or causes of

action which the Contractor asserts against the Confederated Tribes of the Chehalis Reservation arising from the Contract are filed with the Confederated Tribes of the Chehalis Reservation or initiated in court, the Contractor shall permit the Confederated Tribes of the Chehalis Reservation to have timely access to any records deemed necessary by the Confederated Tribes of the Chehalis Reservation to assist in evaluating the claims or action.

1-09.13 Claim Resolution

This Section is deleted in its entirety and replaced with the following:

1-09.13 Claims Resolution *Replacement*

The Contractor and the Confederated Tribes of the Chehalis Reservation mutually agree that any claims, submitted in accordance with Section 1-09.11 and not resolved through negotiations, shall be resolved through litigation in the Chehalis Tribal Court.

1-09.13(3)A Administration of Arbitration *Revision*

The third paragraph of Section 1-03.19(3)A is revised to read:

The The Confederated Tribes of the Chehalis Reservation and the Contractor mutually agree to be bound by the decision of the arbitrator, and judgment upon the award rendered by the arbitrator. The decision of the arbitrator and the specific basis for the decision shall be in writing. The arbitrator shall use the Contract as a basis for decisions.

1-10 TEMPORARY TRAFFIC CONTROL

1-10.2 Traffic Control Management

1-10.2(1) General *Supplement*

Section 1-10.2(1) is supplemented with the following:

Only training with WSDOT TCS card and WSDOT training curriculum is recognized in the State of Washington. The Traffic Control Supervisor shall be certified by one of the following:

The Northwest Laborers-Employers Training Trust
27055 Ohio Ave.
Kingston, WA 98346
(360) 297-3035

Evergreen Safety Council
12545 135th Ave. NE
Kirkland, WA 98034-8709
1-800-521-0778

The American Traffic Safety Services Association
15 Riverside Parkway, Suite 100
Fredericksburg, Virginia 22406-1022
Training Dept. Toll Free (877) 642-4637
Phone: (540) 368-1701

1-10.2(3) Conformance to Established Standards *Replacement*

Section 1-10.2(3) is revised to read:

Flagging, signs, and all other traffic control devices and procedures furnished or provided shall conform to the standards established in the latest WSDOT adopted edition (in accordance with WAC 468-95) of the MUTCD, published by the U.S. Department of Transportation, and the 2005 draft version of the *Public Rights-of-Way Accessibility Guidelines* (PROWAG): https://www.access-

board.gov/guidelines-and-standards/streets-sidewalks/public-rights-of-way/background/revised-draft-guidelines. Judgment of the quality of devices furnished will be based upon *Quality Guidelines for Temporary Traffic Control Devices*, published by the American Traffic Safety Services Association. Copies of the MUTCD and *Quality Guidelines for Temporary Control Devices* may be purchased from the American Traffic Safety Services Association, 15 Riverside Parkway, Suite 100, Fredericksburg, VA 22406-1022.

In addition to the standards of the MUTCD described above,The Confederated Tribes of the Chehalis Reservation enforces crashworthiness requirements for most work zone devices. The AASHTO Manual for Assessing Safety Hardware (MASH) has superseded the National Cooperative Highway Research Project (NCHRP) Report 350 as the established requirements for crash testing. Temporary traffic control devices manufactured after December 31, 2019 shall be compliant with the 2016 edition of the Manual for Assessing Safety Hardware (MASH 16) crash test requirements, as determined by The Confederated Tribes of the Chehalis Reservation, except as follows:

1. In situations where a MASH 16 compliant traffic control device does not exist and there are no available traffic control devices that were manufactured on or before December 31, 2019, then a traffic control device manufactured after December 31, 2019 that is compliant with either NCHRP 350 or the 2009 edition of the Manual for Assessing Safety Hardware (MASH 09) is allowed for use with approval of the Engineer.

2. Temporary traffic control devices that were manufactured on or before December 31, 2019, and were successfully tested to National Cooperative Highway Research Program (NCHRP) Report 350 or MASH 09 may continue to be used on WSDOT projects throughout their normal service life.

3. Small and lightweight channelizing and delineating devices, including cones, tubular markers, flexible delineator posts, and plastic drums, shall meet the requirements of either NCHRP 350, MASH 09, or MASH 16, as determined by the manufacturer of the device.

4. A determination of crashworthiness for acceptance of trailer-mounted devices such as arrow displays, temporary traffic signals, area lighting supports, and portable changeable message signs is currently not required.

The condition of signs and traffic control devices shall be acceptable or marginal as defined in the book *Quality Guidelines for Temporary Traffic Control Devices*, and will be accepted based on a visual inspection by the Engineer. The Engineer's decision on the condition of a sign or traffic control device shall be final. A sign or traffic control device determined to be unacceptable shall be removed from the project and replaced within 12 hours of notification.

1-10.4 Measurement

1-10.4(1) Lump Sum Bid for Project (No Unit Items) *Supplement*

Delete Section 1-10.4(1) and add the following:

The proposal contains the item "Project Temporary Traffic Control", lump sum. No separate payment will be made for the various items, labor, tools, equipment and incidentals to provide "Project Temporary Traffic Control".

1-10.5 Payment

Delete this Section in its entirety and add:

1-10.5(1) Lump Sum Bid for Project (No Unit Items) R*eplacement*

The lump sum Contract payment shall be full compensation for all costs incurred by the

Contractor in performing the Contract Work defined in Section 1-10.

Payment will be made for each of the following bid items:

Project Temporary Traffic Control	Lump Sum

DIVISION 2
EARTHWORK

2-01 Clearing, Grubbing, and Roadside Cleanup

2-01.2 Disposal of Usable Material and Debris *Supplement*

Section 2-01.2 is supplemented with the following:

The Contractor shall dispose of all debris using Disposal Method No. 2 – Waste Site.

2-01.5 Payment *Supplement*

Section 2-01.5 is supplemented with the following:

Payment will be made in accordance with Section 1-04.1 for the following bid items:

Clearing and Grubbing	Lump Sum

2-02 REMOVAL OF STRUCTURES AND OBSTRUCTIONS

2-02.3 Construction Requirements *Replacement*

2-02.3(3) Removal of Pavement, Sidewalks, Curbs, and Gutters *Replacement*

Section 2-02.3(3) is deleted and replaced with the following:

In removing pavement, sidewalks, curbs, and gutters, the Contractor shall:

1. Haul broken-up pieces to a disposal site furnished by the Contractor.
2. Any removed material to be incorporated into the project must meet the materials specifications as applicable for the proposed use.
3. Make a vertical full depth saw cut between any existing pavement, sidewalk, curb, or gutter that is to remain and the portion to be removed. For Portland cement concrete pavement removal, a second vertical full depth relief saw cut offset 12 to 18 inches from and parallel to the initial saw cut is also require, unless the Engineer approved otherwise. For removal of bituminous pavement, asphalt planning equipment may be used in lieu of sawcutting provided that a clean vertical edge remains.
4. Replace at no expense to the The Confederated Tribes of the Chehalis Reservation any existing pavement designated to remain that is damaged during the removal of other pavement.

The approximate thickness of the asphalt pavement is 6 inches.

Cement concrete curb, cement concrete curb and gutter, cement concrete sidewalks, cement concrete driveways, asphalt concrete sidewalks and asphalt concrete driveways that will be lost due to sewer excavation shall be removed, to the limits designated by the Engineer, and replaced in accordance with the standard specifications, these special provisions and the standard plans.

2-02.3(4) Utility Potholing and Conflicts *New*

Add the following new section:

2-02.3(4) Utility Potholing and Conflicts

Utility Potholing

Potholing is included as a bid item for use in determining the location of existing utilities in advance of the Contractor's operations. Where shown on the Plans or requested by the Engineer, the

Contractor shall field verify the elevation and location of existing utilities. Field verification shall be undertaken prior to casting adjacent manholes and prior to the production excavation operation, to give the Engineer the opportunity to make any necessary vertical and horizontal alignment changes, without affecting the production excavation operations. The method of potholing, equipment and tools shall be approved by the Engineer. Potholing shall be conducted in the presence of the Engineer and the Utility owner.

The procedure shall be as follows:

1. Notify Underground Service Alert
2. Excavate by whatever means are necessary to protect the utility and public
3. Verify size and material of utility
4. Tie the horizontal location to sewer station and offset datum
5. Survey elevation at the top of existing utility pipe or invert elevation of sewer pipe, tied to project datum
6. Provide a sketch to the Engineer
7. Backfill

Payment will be for each field verified sewer, water, gas, underground telecommunication, and underground electrical line crossing as indicated in the Proposal for "Pothole Utility", per each and will be full compensation for all labor, equipment, tools, and incidentals necessary to complete this work.

The Engineer has identified locations for potholing that he believes necessary to adequately identify the utilities that may be in conflict. Additional potholing may be determined necessary for utilities marked in the field that were unknown at the time of design. Those additional areas will be paid for under the bid item "Potholing Utility". Any additional potholing that the Contractor believes is necessary to protect existing utilities shall be coordinated with the effected utility and will done at the Contractor's expense and no additional cost to the Confederation of Tribes of the Chehalis Reservation.

Resolution of Utility Conflicts
In no way shall the work described under Utility Potholing or Resolution of Utility Conflict relieve Contractor of any of the responsibilities described in Section 1-07.17 of the Standard Specifications and Special Provisions, and elsewhere in the Contract Documents.

2-02.4 Vacant *Replacement*

Section 2-02.4 including title is deleted and replaced with the following:

2-02.4 Measurement

There is no specific measurement for "Removal of Structures and Obstruction"

"Pothole Utility" per each.

2-02.5 Payment *Supplement*

Section 2-02.5 is supplemented with the following:

Payment will be made for each of the following bid items:

Pothole Utility	Per Each

Sawcutting shall be included in the cost of other Bid items.

"Pothole Utility", per each.

The unit Contract price per each for " Pothole Utility" shall be full payment for furnishing tools, labor, equipment, and materials required to excavate, identify, survey and backfill (with excavated material) the utility line.

No separate payment will be made for Removal of Structures and Obstructions. All work required under Sections 2-02.3(1), 2-02.3(2), and 2-02.3(3) shall be considered incidental to other bid items.

Payment for contract bid items specified above shall be full pay for furnishing all labor, tools, and equipment required to complete the work in accordance with the standard specifications, these special provisions and the standard plans.

Payment shall include all costs related to hauling removed material to a waste disposal site and all dumping site costs.

2-03 ROADWAY EXCAVATION AND EMBANKMENT *Revision*

2-03.1 Description

The last sentence of the first paragraph of Section 2-03.1 is deleted.

2-03.3 Construction Requirements

2-03.3(2) Rock Cuts

Item 3 and 4 of Section 2-03.3(2) are deleted and replaced with the following:

Blasting is not allowed within this contract. If encountered, rock shall be removed by other methods.

2-03.3(3) Excavation Below Subgrade

Section 2-03.3(3) is supplemented with the following:

Material shall be considered rock when, the Engineer witnesses that the Contractor is unable to progress with a Caterpillar 235 Track-Hoe (or equal), or a D-8 Caterpillar equipped with a single tooth ripper (or equal). The cost of equipment, labor and material to operate the above equipment shall be incidental to other bid items.

2-03.3(7) Disposal of Surplus Materials

2-03.3(7)C Contractor Provided Disposal Site

Section 2-03.3(7)C is supplemented with the following:

The The Confederated Tribes of the Chehalis Reservation has not provided a waste site for the disposal of roadway excavation materials or construction debris. The Contractor shall provide the Engineer a list of waste sites used to dispose of project materials that lists the landowner, business address and physical address of the site.

2-03.3(14) Embankment Construction

2-03.3(14)C Compacting Earth Embankments

The first paragraph of Section 2-03.3(14)C is supplemented with the following:

Backfilling in ditches and depressions, under sidewalks, and in other areas outside the traveled way shall be in accordance with Section 2-03.3(14), provided that compaction in areas outside the

traveled way shall be to 92 percent of maximum density. In grass swales or other planting areas the backfill shall be compacted to 85 percent of maximum density.

2-03.3(14)D COMPACTION AND MOISTURE CONTROL TESTS

Delete the contents of this Section and replace with the following:

Maximum density and optimum moisture will be determined using the most current version of AASHTO T-180, with Method A or D as appropriate; and AASHTO T-224, with the following modifications:

1. AASHTO T-180

   5.4.1 Separate samples shall always be used for each point.

2. AASHTO T-224

   4.1 Compacted Laboratory Dry Density Corrected to Field Dry Density.

   Specific gravity for oversize will be determined in the laboratory.

   In-place density and moisture will be determined utilizing the most current version of AASHTO T-310 and WSDOT SOP for T615.

The Contractor shall provide a safe environment for the compaction control test to be performed. This may include temporarily stopping the backfill operation such as the conveyor belt, backhoe, roller, etc. long enough for the safe completion of the test and for trench or other excavation four (4) feet or more in depth provide shoring or other safety method constructed in conformance with WISHA requirements.

2-03.4 Measurement *Revision*

The first paragraph of Section 2-03.4 is deleted and replaced with the following

"Roadway Excavation Incl. Haul" shall be measured by the neatline cubic yard and shall not be field measured. The excavation neatline cubic yard is defined as the calculated difference between the existing surface area elevations and the required excavated plan depth below finish grade over the area of excavation. The quantity shown on the Bid Schedule for "Roadway Excavation Incl. Haul" shall be paid unless the Engineer approves Contractor supplied calculations based on the original project topographic survey showing a more accurate quantity. "Roadway Excavation Incl. Haul" does not include existing pavement removal. "Roadway Excavation Incl. Haul" does not include excavation necessary to construct the project drainage swales.

2-03.5 Payment *Replacement*

Delete this Section in its entirety and add the following:
No separate payment will be made for excavation, embankment, shaping, or compaction of the roadway arear to be restored as a result of utility trenching. All work required by Section 2-03 shall be incidental to other bid items.

2-07 Watering

2-07.1 Description *Supplement*

Section 2-07.1 is supplemented with the following:

Water for dust control shall be applied by the Contractor to adequately control dust throughout the entire construction period to the satisfaction of the Engineer. If the Contractor, fails to water project areas when directed by the Engineer, the Engineer will water the project and deduct the invoice cost of the watering from the project pay estimate.

2-07.3 Construction Requirements

2-07.3(1) Water Supplied from Hydrants *New Section*

Add the following new section:

2-07.3(1) Water Supplied from Hydrants

The Contractor shall secure permission from and comply with all requirements of the The Confederated Tribes of the Chehalis Reservation before obtaining water from fire hydrants. The Engineer shall be notified by the Contractor of such permission as soon as granted.

The Contractor shall only use hydrant wrenches to open hydrants. The Contractor shall also make certain that the hydrant valve is open full, since a partially opened valve causes damage to the hydrant. A metered hydrant connection furnished by the The Confederated Tribes of the Chehalis Reservation shall be used as an auxiliary valve on the outlet line for control purposes. Fire hydrant valves must be closed slowly to avoid a surge in the system; which creates undue pressure on water lines. The Contractor shall carefully note the importance of following these directions.

If one of the Contractor's employees damages a hydrant or pipeline resulting from improper hydrant use, he shall immediately notify the The Confederated Tribes of the Chehalis Reservation so that the damage can be repaired as quickly as possible. The Contractor is responsible for damages resulting in hydrant misuse.

Upon completing the use of the hydrants, the Contractor shall notify the The Confederated Tribes of the Chehalis Reservation so that the hydrants may be inspected for possible damage. Any damage resulting from the use of the hydrants by the Contractor will be repaired by the The Confederated Tribes of the Chehalis Reservation, and the cost thereof shall, if necessary be withheld from the final payment to the Contractor.

The Contractor shall furnish all equipment and tools, except the metered hydrant connection, that may be necessary to meet the requirements of the The Confederated Tribes of the Chehalis Reservation pertaining to hydrant use.

Violation of these requirements could render the Contractor liable for damage suits in the event of fire, because of malfunctioning or damaged fire hydrants.

2-09.3 Structure Excavation *Supplement*

2-09.3 Construction Requirements

2-09.3(1) General Requirements

2-09.3(1)E Backfilling

Section 2-09.3(1)E is supplemented with the following:

A submittal with the mix design is not required if the Contractor is using one of the following mixes:

Supplier	CDF	Lean Concrete
CDA Redi-Mix	020AF38C	030AF38C
Central Pre-Mix Concrete Co.	353005	303030
Interstate Concrete & Asphalt	353005	303030

These mixes will be accepted based on a Certificate of Compliance provided at the jobsite by the supplier per 6-02.3(5)B.

The lean concrete mix shall have 3-sacks of concrete per cubic yard of mix and the maximum aggregate size shall be 3/8-inch. A non-chloride accelerant may he added to decrease set time.

2-09.4 Measurement *Replacement*

Section 2-09.4 is deleted and replaced with the following:

For all pipes, there will be no specific measurement for structural excavation or shoring. For all manholes, catch basins, grate inlets, drop inlets, pump stations, valve vaults and other structures there will be no specific measurement for structural excavation or shoring.

2-09.5 Payment *Replacement*

Section 2-09.5 is deleted and replaced with the following:

There will be no separate payment for Structure Excavation. All excavations required to install pipes, manholes, pump stations, and other structures shall be incidental to other bid items.

DIVISION 4
BASES

4-04 BALLAST AND CRUSHED SURFACING *Supplement*

4-03 Construction Requirements

4-04.3(5) Shaping and Compaction

Section 4-04.3(5) is supplemented with the following:

Crushed surfacing placed under areas subject to vehicular traffic (roadway surfaces, parking areas, driveway approaches, shared use path and curb and gutter) shall be compacted to at least 95 percent of the standard density determined by the requirements of Section 2-03.3(14)D.

Crushed surfacing placed under structures such as catch basins, inlets, curb inlets, pullboxes, junction boxes and inlets shall be compacted to at least 95 percent of the standard density determined by the requirements of Section 2-03.3(14)D.

Crushed surfacing placed under areas subject to pedestrian traffic only sidewalks shall be compacted to at least 90 percent of the standard density determined by the requirements of Section 2-03.3(14)D.

4-04.4 Measurement

Section 4-04.4 is supplemented with the following:

The following crushed surfacing materials will be measured and paid for:

Material	Depth	Location
CSTC	4 Inch	Gravel for Roadway Shoulders

-All costs for crushed surfacing material used at other locations not listed in the above table shall be included in payment for other items of Work in the Contract. **Crushed Surfacing Top Course under HMA patching, Sidewalk and Curb replacement will not be measure separately.**

"Crushed Surfacing Top Course – Shoulder Rock" shall be measured by plan cubic yard of compacted material in place.

4-04.5 Payment

Section 4-04.4 is supplemented with the following:

Payment will be made for each of the following bid items:

Crushed Surfacing Top Course – Shoulder Rock	Per Cubic Yard

The unit Contract price per cubic yard "Crushed Surfacing Top Course – Shoulder Rock", shall be full payment for furnishing tools, labor, equipment, and materials required to furnish, load, haul, place and compact crushed surfacing top course to the bid item depth in those areas shown on the plans.

The unit Contract price per cubic yard "Crushed Surfacing Base Course – Shoulder Rock", shall be full payment for furnishing tools, labor, equipment, and materials required to furnish, load, haul, place and compact crushed surfacing base course to the bid item depth in those areas shown on the plans.

Crushed Surfacing Top Course under HMA patching, Sidewalk and Curb replacements shall be considered incidental to other bid items and separate payment will not be made.

DIVISION 5
SURFACE TREATMENTS AND PAVEMENTS

5-04 Hot Mix Asphalt

5-04.2 Materials

5-04.2(1) How to Get an HMA Mix Design on the QPL

5-04.2(1)A Mix Designs Containing RAP and/or RAS *Supplement*

Section 5-04.2(1)A is supplemented with the following:

Mix designs using RAP must meet the classification of Low RAP per Table 2. "High RAP/Any RAS" mix designs will not be accepted.

5-04.2(2) Mix Design – Obtaining Project Approval *Replacement*

Delete this section and replace with the following:

No paving shall begin prior to the approval of the mix design by the Engineer.

Fifteen days prior to the first day of paving the contractor shall provide one of the following mix design verification certifications for The Confederated Tribes of the Chehalis Reservation review;

- The WSDOT Mix Design Evaluation Report from the current WSDOT QPL, or one of the mix design verification certifications listed below.
- The proposed HMA mix design on WSDOT Form 350-042 with the seal and certification (stamp & signature) of a valid licensed Washington State Professional Engineer.
- The Mix Design Report for the proposed HMA mix design developed by a qualified City or County laboratory that is within one year of the approval date.

The mix design shall be performed by a lab accredited by a national authority such as Laboratory Accreditation Bureau, L-A-B for Construction Materials Testing, The Construction Materials Engineering Council (CMEC's) ISO 17025 or AASHTO Accreditation Program (AAP) and shall supply evidence of participation in the AASHTO: resource proficiency sample program.

Mix designs shall;

- Have the aggregate structure and asphalt binder content determined in accordance with WSDOT Standard Operating Procedure 732 and meet the requirements of Sections 9-03.8(2), except that Hamburg testing for ruts and stripping are at the discretion of the Engineer, and 9-03.8(6).
- Have anti-strip requirements, if any, for the proposed mix design determined in accordance with AASHTO T 283 or T 324, or based on historic anti-strip and aggregate source compatibility from previous WSDOT lab testing. (For commercial mixes, AASHTO T 324 evaluation is not required)

At the discretion of the Engineer, agencies may accept verified mix designs older than 12 months from the original verification date with a certification from the Contractor that the materials and sources are the same as those shown on the original mix design.

For the Bid Item Commercial HMA, the Contractor shall select a class of HMA and design level of Equivalent Single Axle Loads (ESAL's) appropriate for the required use.

5-04.3 Construction Requirements

5-04.3(3) Equipment

5-04.3(3)D Material Transfer Device or Material Transfer Vehicle *Deletion*

Section 5-04.3(3)D is deleted in its entirety.

5-04.3(7) Spreading and Finishing *Supplement*

Section 5-04.3(7) is supplemented with the following:

The contractor shall bid and construct each project with enough equipment so that, on a roadway with two or more lanes, only one cold longitudinal joint, placed at centerline, shall be constructed in any roadway.

The mixture shall be laid upon approved surface, spread, and struck off to the grade and elevation established. HMA pavers complying with Section 5-04.3(3) shall be used to distribute the mixture.

The temperature of the mixture at point of transfer into the paver shall not be lower than the recommended compaction temperature as stated on the mix-design, unless otherwise directed by the Engineer in writing.

The minimum compacted depth of any layer in any course is to be as shown in Table 6A, unless approved by the engineer:

Table 6A
Minimum Nominal Compacted Depth of Any Layer

HMA Class	Minimum Lift Thickness (ft)
⅜ inch	0.08 feet
½ inch	0.12 feet
¾ inch	0.20 feet
1 inch	0.25 feet

5-04.3(8) Aggregate Acceptance Prior to Incorporation in HMA *Deletion*

The second paragraph of Section 5-04.3(8) is deleted.

5-04.3(9) HMA Mixture Acceptance *Revision*

Table 7 in Section 5-04.3(9) is revised with the following:

Table 7

Basis of Acceptance for HMA Mixture		
	Visual Evaluation	**Statistical Evaluation**
Criteria for Selecting the Evaluation Method	• Commercial HMA placed at any location • Any HMA placed in: o driveways o ditches o prelevel o pavement patches o temporary pavement[1] • Other nonstructural applications of HMA as approved by the Engineer	All HMA mixture other than that accepted by Visual Evaluation

[1]Temporary pavement is HMA that will be removed before Physical Completion of the Contract.

5-04.3(9)A Mixture Acceptance – Test Section *Deletion*

Section 5-04.3(9)A , including its subsections are deleted in its entirety.

5-04.3(9)B Mixture Acceptance-Statistical Evaluation

5-04.3(9)B1 Mixture Statistical Evaluation-Lots and Sublots *Replacement*

Section 5-04.3(9)B1 is replaced with the following:

A lot is represented by randomly selected samples of the same mix design that will be tested for acceptance. A lot is defined as the total quantity of material or work produced for each Job Mix Formula placed. Only one lot per JMF is expected. A sublot shall be equal to one day's production or 1,000 tons, whichever is less except that the final sublot will be a minimum of 400 tons and may be increased to 1200 tons.

All of the test results obtained from the acceptance samples from a given lot shall be evaluated collectively. If the Contractor requests a change to the JMF that is approved, the material produced after the change will be evaluated on the basis of the new JMF for the remaining sublots in the current lot and for acceptance of subsequent lots. For a lot in progress with a CPF less than 0.75, a new lot will begin at the Contractor's request after the Engineer is satisfied that material conforming to the Specifications can be produced.

Sampling and testing for evaluation shall be performed on the frequency of one sample per sublot.

5-04.3(9)B2 Mixture Statistical Evaluation-Sampling *Replacement*

Section 5-04.3(9)B2 is replaced with the following:

Samples for acceptance testing shall be obtained by the Contractor when ordered by the Engineer. The Contractor shall sample the HMA mixture in the presence of the Engineer and in accordance with AASH-TO T 168. A minimum of three samples should be taken for each class of HMA placed on a project. If used in a structural application, at least one of the three samples shall to be tested.

Sampling and testing HMA in a Structural application where quantities are less than 400 tons is at the discretion of the Engineer.

For HMA used in a structural application and with a total project quantity less than 800 tons but more than 400 tons, a minimum of one acceptance test shall be performed. In all cases, a minimum of 3 samples will be obtained at the point of acceptance, a minimum of one of the three samples will be tested for conformance to the JMF:

- If the test results are found to be within specification requirements, additional testing will be at the Engineer's discretion.
- If test results are found not to be within specification requirements, additional testing of the remaining samples to determine a Composite Pay Factor (CPF) shall be performed.

5-04.3(9)B3 Mixture Statistical Evaluation-Acceptance Testing *Supplement*

Section 5-04.3(9)B3 is supplemented with the following:

Testing of HMA for compliance of Va will at the option of the The Confederated Tribes of the Chehalis Reservation. If tested, compliance of Va will use WSDOT SOP 731.

5-04.3(9)B5 Mixture Statistical Evaluation – Composite Pay Factors (CPF)

The last sentence of Section 5-04.3(9)B5 is revised to read:

The maximum CPF for HMA mixture shall be 1.0.

Table 12 of Section 5-04.3(9)B5 is revised to read:

Table 12 HMA Mixture Price Adjustment Factors

Constituent	Factor "f"
All aggregate passing: 1½″, 1″, ¾″, ½″, ⅜″ and No.4 sieves	2
All aggregate passing No. 8 sieve	15
All aggregate passing No. 200 sieve	20
Asphalt binder	40
Voids in Mineral Aggregate	2
Air Voids (Va) (where applicable)	20

5-04.3(9)B6 Mixture Statistical Evaluation – Price Adjustments

Section 5-04.3(9)B6 is replaced by the following:

For each HMA mixture lot, a Job Mix Compliance Price Adjustment will be determined and applied, as follows:

$$JMCPA = [0.60 \times (CPF - 1.00)] \times Q \times UP$$

Where
JMCPA = Job Mix Compliance Price Adjustment for a given lot of mixture ($)
CPF = Composite Pay Factor for a given lot of mixture (maximum is 1.00)
Q = Quantity in a given lot of mixture (tons or S.Y.)
UP = Unit price of the HMA in a given lot of mixture ($/ton or S.Y.)

5-04.3(9)B7 Mixture Statistical Evaluation – Retests

Section 5-04.3(9)B7 is replaced with the following:

The Contractor may request a sublot be retested. To request a retest, the Contractor shall submit a written request within 7 calendar days after the specific test results have been received. A split of the original acceptance sample will be retested. The split of the sample will not be tested with the same tester that ran the original acceptance test. The sample will be tested for a complete gradation analysis, asphalt binder content, VMA and, at the option of the agency, V_a. The results of the retest will be used for the acceptance of the HMA in place of the original sublot sample test results. The cost of testing will be deducted from any monies due or that may come due the Contractor under the Contract at the rate of $500 per sample.

5-04.3(9)E Mixture Acceptance – Notification of Acceptance Test Results *Replacement*

Section 5-04.3(9)E is replaced with the following:

The results of all acceptance testing performed in the field and the Composite Pay Factor (CPF) of the lot after three sublots have been tested will be available to the Contractor upon request to the Engineer.

The Contractor agrees:

1. Quality control, defined as the system used by the Contractor to monitor, assess, and adjust its production processes to ensure that the final HMA mixture will meet the specified level of quality, is the sole responsibility of the Contractor.

2. The Contractor has no right to rely on any testing performed by the The Confederated Tribes of the Chehalis Reservation, nor does the Contractor have any right to rely on timely notification by the The Confederated Tribes of the Chehalis Reservation of the The Confederated Tribes of the Chehalis Reservation's test results (or statistical analysis thereof), for any part of quality control and/or for making changes or correction to any aspect of the HMA mixture.

3. The Contractor shall make no claim for untimely notification by the The Confederated Tribes of the Chehalis Reservation of the The Confederated Tribes of the Chehalis Reservation's test results or statistical analysis.

5-04.3(10) HMA Compaction Acceptance

5-04.3(10)B HMA Compaction – Cyclic Density *Revision*

The first sentence of section 5-04.3(10)B is revised to read:

Low cyclic density areas are defined as spots or streaks in the pavement that are less than **91.0-percent** of the theoretical maximum density.

The third sentence of Section 5-04.3(10)B is revised to read:

A $500 price adjustment will be assessed for any 500-foot section with two or more density readings below 91 percent of the theoretical maximum density.

5-04.3(10)C HMA Compaction Acceptance – Statistical Evaluation

5-04.3(10)C1 HMA Compaction Statistical Evaluation – Lots and Sublots

Section 5-04.3(10)C1 is replaced with the following:

HMA compaction which is accepted by Statistical Evaluation will be based on acceptance testing performed by the The Confederated Tribes of the Chehalis Reservation dividing the project into compaction lots.

A lot is represented by randomly selected samples of the same mix design that will be tested for acceptance. A lot is defined as the total quantity of material or work produced for each Job Mix Formula placed. Only one lot per JMF is expected. A sublot shall be equal to one day's production or 400 tons, whichever is less except that the final sublot will be a minimum of 200 tons and may be increased to 800 tons. Testing for compaction will be at the rate of 5 tests per sublot per WSDOT T 738.

The sublot locations within each density lot will be determined by the Engineer. For a lot in progress with a CPF less than 0.75, a new lot will begin at the Contractor's request after the Engineer is satisfied that material conforming to the Specifications can be produced.

5-04.3(10)C2 HMA Compaction Statistical Evaluation – Acceptance Testing

Section 5-04.3(10)C2 is replaced with the following:

The location of the HMA compaction acceptance tests will be randomly selected by the Engineer from within each sublot, with one test per sublot.

5-04.3(10)C3 HMA Statistical Compaction – Price Adjustments *Replacement*

Section 5-04.3(10)C3 is replaced with the following:

For each HMA compaction lot (that is accepted by Statistical Evaluation) which has less than three compaction sublots, for which all compaction sublots attain a minimum of **92** percent compaction determined in accordance with FOP for WAQTC TM 8 (or WSDOT SOP 736 when provided by the Contract), the HMA will be accepted at the unit Contract price with no further evaluation.

For each HMA compaction lot (that is accepted by Statistical Evaluation) which does not meet the criteria in the preceding paragraph, the compaction lot shall be evaluated in accordance with Section 1-06.2(2) to determine the appropriate Compaction Price Adjustment (CPA). All of the test results obtained from the acceptance samples from a given compaction lot shall be evaluated collectively. Additional testing by either a nuclear density gauge or cores will be completed as required to provide a minimum of three tests for evaluation.

For the statistical analysis in Section 1-06.2, use the following values:

x = Percent compaction of each sublot
USL = 100
LSL= **92**

Each CPA will be determined as follows:

CPA = [0.60 x (CPF – 1.00)] x Q x UP

Where

CPA = Compaction Price Adjustment for the compaction lot ($)
CPF = Composite Pay Factor for the compaction lot (maximum is 1.0)
Q = Quantity in the compaction lot (tons or S.Y.)
UP = Unit price of the HMA in the compaction lot ($/ton or $/S.Y.)

5-04.3(10)C4 HMA Statistical Compaction – Requests for Retesting *Revision*

The first sentence of the first paragraph of Section 5-04.3(10)C4 is revised to read:

For a compaction sublot that has been tested with a nuclear density gauge that did not meet the minimum of **92** percent of the theoretical maximum density in a compaction lot with a CPF below 1.00 and thus subject to a price reduction or rejection, the Contractor may request that a core, taken at the same location as the nuclear density test, be used for determination of the relative density of the compaction sublot.

5-04.3(12) Joints

5-04.3(12)A HMA Joints

5-04.3(12)A1 Transverse Joints *Revision*

The first sentence of the second paragraph of Section 5-04.3(12)A is revised to read:

Construct a temporary wedge of HMA on a 12:1 for drop offs less than 3 inches and 30:1 for drop offs great than or equal to 3 inches where a transverse joint as a result of paving or planing is open to traffic.

5-04.3(12)A2 Longitudinal Joints *Supplement*

Section 5-04.3(12)A2 is supplemented with the following:

The Contractor shall install tack to all joints (longitudinal or transverse) of wearing course lifts that are not hot lapped.

Equipment used for performing the tack application shall be maintained in satisfactory working condition at all times.

Prior to the application of tack the face of the joint shall be thoroughly dry and free from any loose material, dust, or other debris that would inhibit adhesion.

Longitudinal joint tack shall be applied concurrent with the final HMA placement and application shall be limited to the surfaces that will be paved during the same working shift.

Application of the tack shall be over the entire vertical face of the longitudinal and transverse joints and over the vertical face of the HMA longitudinal step wedge joint

Longitudinal step wedge joint
A continuous longitudinal step wedge joint shall be constructed along the longitudinal joint at centerline or as shown on the Plans. The HMA step joint shall consist of a vertical step not less than ¾-inch or more than one-half the compacted lift thickness. The remaining depth below the vertical step shall be tapered at a slope not steeper than 4:1. The sloped portion of the HMA step wedge joint shall be uniformly compacted with a plate wacker or other device approved by the Engineer. Tack shall be applied on the vertical face of the joint prior to placing the adjoining HMA.

The longitudinal step wedge joint need not be constructed within cul-de-sacs or on residential streets with a centerline length less than 300 feet.

5-04.3(12)A3 Joint Adhesive *New Section*

Section 5-04.3(12)A3 is a new section:

5-04.3(12)A3 Joint Adhesive

A heavy application of tack coat (0.16 gallons per square yard) shall be applied to all vertical faces of the joints. The contractor shall re-tack the joint once after pavement compaction is complete. A clean sand shall be applied to blot the tack while patching to assure that the tack coat does not track off site. It should be evident that the joint is sealed to the Engineer. If the joint opens up, the contractor shall seal the joint with an approved crack sealant.

The Tack Coat shall be an un-diluted CSS-1 emulsified asphalt. The tack coat shall have sufficient temperature such that it may be applied uniformly at the specified rate of application and shall not exceed the maximum temperature recommended by the emulsified asphalt manufacturer.

5-04.3(13) Surface Smoothness *Supplement/Revision*

Section 5-04.3(13) is supplemented with the following:

Any paved areas that do not shed water, but pond it; shall be counted as an excessive defect. At the request of the Engineer paved areas shall be flooded by the contractor to evaluate for ponding. The cost associated with testing for ponding shall be incidental to bid item for HMA.

The last paragraph of Section 5-04.3(13) is deleted and replaced with the following:

The Contractor shall place compacted cold mix or HMA over lowered utilities prior to opening the lane to traffic.

Frames, grates and lids for sewer manholes, storm water manholes and catch basins, water valve boxes, gas valve boxes, communication and power vaults, monument cases, pull boxes and junction boxes in the travelled way shall be adjusted prior to placing the top lift or wearing course of hot mix asphalt in the following manner:

After lowering the utility, the Contractor shall patch the pavement with cold mix prior to allowing traffic over the lowered utility.

On multiple lift asphalt paving projects and resurfacing projects, after the leveling or pre-leveling course is placed and prior to paving the top lift of asphalt, previous lifts of asphalt shall be saw cut in a square pattern around the outside edges of the utility to be raised. The sawcut area shall be a minimum of 12 inches and a maximum of 19 inches larger than the outermost portion of the casting. Disturbed crushed rock or sub-grade shall be re-compacted to the satisfaction of the Engineer. The Contractor shall fill the area with either HMA or lean concrete. A mix design must be submitted for lean concrete on WSDOT Form 350-040.

When HMA is used it shall be the same type used for the surrounding leveling course. The edge of the pavement and the outside of the casting shall be tacked and the HMA shall be compacted in maximum 2-inch lifts with a jumping jack or other device approved by the Engineer. The HMA shall be the same depth and flush with and the leveling course surrounding the adjustment.

When lean concrete is used the cut shall be a minimum of 6-inches and a maximum of 18-inches larger than the outermost portion of the casting. The lean concrete mix shall have 3-sacks of concrete per cubic yard of mix and the maximum aggregate size shall be 3/8-inch. A non-chloride accelerant may he added to decrease set time. The lean concrete mix shall be the same depth and flush with the surface of the surrounding leveling course. The Engineer will determine if the lean concrete has cured sufficiently to allow placement of the final lift of HMA. The Engineer may require the use of HMA around utility adjustments where the extents of the patch are more than 18-inches larger than the outermost portion of the casting.

The Contractor shall protect the adjusted utilities exposed to traffic by furnishing and installing a two inch thick, durable rubber protective ring or other method approved by the Engineer. The cost of furnishing, installing and removing the protective rings shall be included in the unit bid price of the appropriate utility adjustment bid item.

Frames, grates and lids for sewer manholes, storm water manholes and catch basins, water valve boxes, gas valve boxes, communication and power vaults, monument cases, pull boxes and junction boxes in the travelled way shall be adjusted prior to paving the wearing course. The rim elevation of each utility shall be 1/8 inch to 3/8 inches below the top of the wearing course. Catch basin inlets, set in or adjacent to curbing, shall be set ½ inch below gutter grade.

If the rim depth at any point, measured with a 10-foot straightedge is out of compliance, the Contractor shall readjust the utility casting to the proper tolerances at the Contractor's expense unless otherwise approved by the engineer. Every utility casting not within the depth tolerance after the paving of the wearing course shall be subject to a penalty of $500.00, including utility castings that were readjusted to the correct tolerance, will be deducted from the Contractor's payment.

The Contractor may not use pre-manufactured frame inserts.

5-04.4 Measurement

Section 5-04.4 is supplemented with the following:

HMA CL. ___ PG ___, ___ Inch Depth will be measured by the square yard per typical section/details shown on the plans

Commercial HMA will be measured by the square yard per typical section/details shown on the plans. Commercial HMA will be used for driveway approaches, parking lots, and areas behind curb.

If the Contractor elects to remove and replace HMA as allowed by Section 5-04.3(11), the material removed will not be measured.

5-04.5 Payment

Section 5-04.5 is supplemented as follows:

Payment will be made for each of the following bid items:

HMA Cl. 1/2 In. PG 64H-28, 3 Inch Depth	Per Square Yard

"HMA CL. __ In. PG __, __ In. Depth", per square yard.

The unit Contract price square yard for " HMA CL. __ In. PG __, __ In. Depth shall be full compensation for mobilization, subgrade preparation, furnishing and installing all material including Crushed Surfacing Top Course, and HMA labor, equipment in accordance with the requirements of Sections 4-04 and 5-04.

When HMA is paid by the square yard for a given depth, a Thickness Deficiency Payment Deduction shall be subtracted from the HMA bid item unit price if the average depth of the HMA pavement placed is less than that shown on the Plan Section. When the total tonnage placed for each HMA bid item, per day of paving operation, does not calculate and average to the required Contract plan depth and its depth discrepancy is greater than 1/8 inch, the following table will be used to determine the Thickness Deficiency Payment Deduction to the HMA bid item unit price for the total HMA placed for that day. The daily average HMA depth will be measured by the total HMA tonnage (collected from truck tickets) divided by the asphalt's daily average in place density tests (or from the HMA mix design) and then divided by the total area paved (field measured) for each HMA bid item.

Average Thickness Deficiency (Inch)	Thickness Deficiency Payment Deduction (% Unit Price Per Square Yard)
0 to 1/8"	0
Greater Than 1/8" to 1/4"	15
Greater Than 1/4" to 3/8"	25
Greater Than 3/8" to 1/2"	50
Greater Than 1/2"	100*

DIVISION 6
STRUCTURES

6-02 CONCRETE STRUCTURES *Supplement*

6-02.3 Construction Requirements

6-02.3(2) Proportioning Materials

6-02.3(2)B Commercial Concrete

Section 6-02.3(2)B is supplemented with the following:

Commercial concrete used for curb, curb and gutter, curb ramps, sidewalks, driveway approaches and median islands shall have a minimum compressive strength at 28 days of 4,000 psi in accordance with AASHTO T22.

The last sentence of the second paragraph of Section 6-02.3(2)B is revised to read:

Commercial concrete used for curb, curb and gutter, curb ramps, sidewalks, driveway approaches and median islands, it shall have a minimum cementitious material content of 564 pounds per cubic yard of concrete, shall be air entrained, and the tolerances of Section 6-02.3(5)C shall apply

6-02.3(4) Ready Mix Concrete

Section 6-02.3(4) is replaced with the following:

All concrete shall be batched in a pre-qualified manual, semi-automatic, or automatic plant as described in Section 6-02.3(4)A. The Engineer is not responsible for any delays to the Contractor due to problems in getting the plant certified.

6-02.3(5) Acceptance of Concrete

6-02.3(5)B Certification of Compliance *Revision*

Delete the last sentence and replace with the following:

The Certificate of Compliance for commercial concrete, 4,000P concrete, Cl 4,000 Commercial concrete, Controlled Density Fill, and lean concrete, shall include, as a minimum, the following information:

Type of Concrete
Admixtures added at the plant
Batching facility
Date and time of batching
Mix Number
Truck No.

DIVISION 7
DRAINAGE STRUCTURES, STORM SEWERS, SANITARY SEWERS, WATER MAINS, AND CONDUITS

7-05 MANHOLES, INLETS, CATCH BASINS, AND DRYWELLS

7-05.2 Materials *Supplement*

Section 7-05.2 is supplemented with the following:

Manhole Steps and Entry Couplings
Manhole steps are required for all manholes except Type III manholes. Manhole steps shall be reinforced copolymer polypropylene plastic as manufactured by Lane International Corporation or an alternate acceptable to the Engineer. Manhole steps shall have integral restraints to prevent side slippage of feet.

Entry couplings shall be Kor-N-Seal or a PVC manhole adapter as manufactured by GPK Products, Inc. or a Dura-Seal III gasket as manufactured by Dura-Tech, Inc., or acceptable alternate. Gasket material shall comply with the provision of ASTM D-2000 3 BA715. Kor-N-Seal shall be installed at the manhole manufacturer's plant. Field installation will not be permitted.

Locking Manhole Lids
The Contractor shall ensure that bolts used in the locking manhole lids have the bolt head recessed a minimum of 1/16 of an inch below the surrounding manhole top surface.

The Engineer shall check the bolt head clearance in the field, and if the minimum clearance is not provided the Contractor shall replace the bolts as necessary at no cost to the The Confederated Tribes of the Chehalis Reservation.

Manhole Cone Section
All manholes shall be constructed with gasketed eccentric cone sections, unless otherwise specified by the Engineer. Eccentric cones shall be cast with an integral riser. Cones will be inspected on the job site and if defects or damages are noted, the cones shall be repaired or replaced prior to installation.

Catch Basin Frames
All catch basin shall have grate guards

7-05.3 Construction Requirements *Revision*

The fifth paragraph of Section 7-05.3 is replaced with the following:

Steps shall be firmly secured to the manhole sections, shall be vertically aligned as shown on the Plans and shall project uniformly from the inside wall. Steps shall be cast in manhole sections or installed by being driven into a drilled or formed hole per manufacturer's recommendations. Chipping out or drilling an oversized hole and grouting in the steps shall not be acceptable.

The sixth paragraph of Section 7-05.3 is supplemented with the following:

The cut shall be made by drilling or sawing but not by a sledgehammer.

The eleventh paragraph of Section 7-05.3 is supplemented with the following:

Entry couplings shall be installed per manufacturer's recommendations. The opening shall be pre-formed or cored. Breaking an opening with a sledgehammer is not acceptable.

Where connections are made using entry couplings other than sand collars, the void surrounding the pipe at the entry point shall not be filled with grout. Grouted entry couplings will be a noted deficiency and grout removal will be required.

Section 7-05.3 is supplemented with the following:

Completed manholes shall be carefully checked to ensure that they are properly set to grade and have not been damaged during construction.

Repairs to damaged manholes shall return the manholes to their original condition.

If a damaged manhole cannot be repaired to its original condition, the manhole shall be replaced at no additional cost to the The Confederated Tribes of the Chehalis Reservation.

The Contractor shall provide protection for each manhole to protect the finished and cleaned invert. Any debris shall be removed before the cover is finally removed for installation of the permanent cast-iron frame and cover. The only exception to providing this temporary cover is when a manhole frame and cover is immediately installed in place after the invert is completed.

The Contractor shall completely clean all manholes prior to request for final inspection. Cleaning shall include, but not be limited to: debris removal; removal of mortar, dirt, and asphalt from steps; removal of asphalt from the manhole cover and ring.

This provision covers special backfill for drywells for complete installation or replacement of a drywell or partial replacement of drywell backfill due to sewer construction. Work shall be per details on the plans.

The minimum required quantity of gravel backfill for Type "A" drywells is 30 cubic yards, 42 tons; and for Type "B" drywells is 40 cubic yards, 56 tons. The backfill shall be placed and compacted as requested by the Engineer.

Manhole Tests

The Contractor shall use either the water exfiltration method or vacuum method described below.

a. Water Exfiltration Test: Prior to testing, the manhole shall be completely constructed, and all inlet and outlet pipes shall be plugged. The Contractor shall fill the manhole to a depth of 6-feet above the highest pipe crown with water. Four hours after the manhole has been filled, the Contractor shall refill the manhole to original water level and commence the test. The Contractor shall keep the water surface to the six-foot level for a 6-hour period. The leakage rate shall not exceed 0.2 gallons per hour per foot at test head above the pipe crown elevation

b. Vacuum Testing: Each manhole shall not be tested until after final assembly and backfilling is completed. The Contractor shall plug all openings in the sides of the manhole and all pipes entering the manhole, taking care to securely brace the plugs from being drawn into the manhole. Openings shall be plugged with a non-shrink grout acceptable to the Engineer. The test head shall be placed at the inside of the top of the cone section and the seal inflated in accordance with the manufacturer's recommendations.

   A vacuum of 10-inches of mercury shall be drawn and the vacuum pump shut off. With the valves closed, the time shall be measured for the vacuum to drop to 9-inches. The manhole shall pass if the test time is in accordance with the following table:

Depth (ft) of Manhole	Diameter (inches) / Time (seconds)		
	48”	60”	72”
8	14	18	23
10	17	23	28
12	21	28	34
14	25	32	40
16	28	37	45
18	32	41	51
20	35	46	57
22	39	51	62
24	42	55	68
26	46	60	74
28	49	64	80
30	53	69	85

Manhole Test Selection and Acceptance

The Engineer will select the manholes, quantity as specified in the bid documents, at random for testing.

If any of the originally selected manholes fails the test, the Engineer reserves the right to select additional manholes for testing until the number of consecutive passing first attempt tests reaches the number of manholes to be tested, as specified in the bid document.

Manholes failing the test shall be repaired and re-tested until they pass. Re-tested manholes will not be included in the total number to be tested as specified in the bid documents. The Contractor shall repair and re-test failing manholes at no additional cost. *Any repairs done to the failing manholes, in order to make them pass, shall be performed to all remaining manholes prior to the Engineer selecting additional manholes for testing. The repairs shall be made at no additional cost to the Owner.*

The cost for testing manholes beyond the original number specified in the bid documents or re-testing of manholes shall be considered incidental to the cost of manhole testing.

Native Material

Native material in the bottom of the trench shall be re-compacted with a small mechanical vibrator/compactor or equal before setting the manhole base. Special care shall be taken at the manhole, where over excavation occurs, to recompact under the pipe.

Channels

Channels shall be constructed to a uniform section and grade as shown on the plans. Channel sections shall not be smaller than the connecting pipes. All channels with deviations not acceptable to the Engineer shall be removed and reconstructed at no additional cost to the The Confederated Tribes of the Chehalis Reservation. Channel surface shall have a smooth trowel finish.

During the material submittal process the contractor shall certify that the proposed manhole channels meet the design and radius requirements and these contract documents. At the Contractors request the The Confederated Tribes of the Chehalis Reservation or their appointed representative can visit the manufacturers site and inspect a sample manhole base before being delivered to the site.

Manhole channels shall be formed and constructed in strict conformance with the standard plans. Manholes will be inspected upon delivery to the site and any non-complying manholes will be rejected and shall be removed from the project site at the Contractor’s expense. Any time delays resulting from non-conforming manholes shall be borne by the Contractor.

Manhole Ring and Covers

Manhole rings and covers shall be manufactured to assure a non-rocking fit with any cover position. If the assembly rocks, subsequent to corrective work, the Engineer may require complete replacement of the components. Grinding of components shall not be allowed.

All openings between the structure and the pipe shall be watertight and filled with mortar type 3 or grout type 4 that has a minimum compressive strength of 4,000 psi at 7 days.

7-05.3(1) Adjusting Manholes, Drywells and Catch Basins to Grade *City/Supplement*

Section 7-05.3(1) is supplemented with the following:

Frames and grates of manholes and catch basins that will be replaced shall be disposed offsite by the Contractor.

Manhole Rim Elevations

When adjusting existing structures to new grades the maximum vertical distance between the top of storm drain or sanitary sewer structure slab or cone section and the bottom of grate shall be 13 inches and the minimum vertical distance shall be 2 inches. If this vertical distance is exceeded, the Contractor shall remove the existing cone or lid; furnish and install a barrel section; reset the lid or cone; before furnishing and installing all necessary concrete collars or rings.

The manhole, drywell and catch basin rim elevations shown on the Plans are estimates only. The Contractor shall set the rim elevations in accordance with Section 5-04.3(13).

Precast concrete adjustment rings shall be used in manhole construction. Final adjustment shall be made using a maximum ¼" bed of water proof non-shrink mortar or metal shims. Polyethylene adjustment rings may also be used, subject to the acceptance of the Engineer. "Infra-Riser", manufactured by East Jordan Iron Works, may be used.

The manhole rim elevations shown on the Plans are estimates only. The Contractor shall set the rim elevations at 1/8- to 3/8-inches below the surrounding final pavement or ground per the road section details shown on the Plans or as requested by the Engineer.

All rim and grate adjustments of 1 inch or greater shall be done with concrete adjustment rings. Concrete bricks are not allowed. Adjustment rings and castings shall receive a min. ¼" bed of watertight, mortar type 3 between them. The adjustment section shall then receive coating of watertight, mortar type 3 on the outside, with the mortar struck off on the inside with a concave or "V" joint between the rings and casting.

Existing manholes, drywells, inlets, or catch basins may require adjustment to provide for drainage and driveway exposure. Adjustments up to 4-inches shall be considered incidental to other Bid items.

All adjustments of manholes, drywells, catch basins, and other surface features shall be complete prior to placement of the final lift of HMA. Each adjustment made subsequent to the final lift of HMA shall be subject to the requirements of section 5-04.3(13).

The Contractor shall prevent soil or debris entering manholes, catch basins, drywells or inlets during construction. The Contractor shall remove any debris from an active storm drain or sanitary sewer system within 24 hours.

Prior to final acceptance the Contractor shall jet all storm drain and sanitary sewer pipes and clean out all catch basins, inlets and manholes within the project limits to the next manhole, catch basin or drywell downstream of the project. The Contractor shall utilize a vacuum truck at the next manhole downstream while cleaning to prevent any debris from flowing beyond the project limits.

7-05.3(2) Abandon Existing Manholes *Replacement*

(February 7, 2018 COSV GSP)

Section 7-05.3(2) including title is deleted and replaced with the following:

7-05.3(2) Abandon Existing Manholes, Drywells and Catch Basins

Where shown on the plans or directed by the Engineer, existing manholes, drywells, inlets and catch basins shall be abandoned or removed in accordance with Section 2-02.

7-05.3(3) Connections to Existing Manholes *Supplement*

Section 7-05.3(3) is supplemented with the following:

The Contractor shall make the connection in accordance the details shown on the Plans. The Contractor shall verify the existing manhole invert elevation prior to laying the new upstream line. Any deviation of the invert elevation from the plans shall be adjusted for in the grade of the upstream pipe so as to meet the design elevation at the next upstream manhole. When the connection to an existing manhole will bring existing flow immediately to the new line, the Contractor shall not make the connection until all downstream lines are inspected and accepted by the Engineer.

In making connection to existing manholes, core the manhole to the diameter sufficient for installation of the adapter diameter required for the pipe diameter shown on the Plans. Coring shall also include the manhole channel. Install the adapter and connect the new pipe to the manhole. Adapters shall be "Inserta Tee" by Fowler Industries, no substitutes will be accepted. Shape the new manhole channel to provide a smooth and uniform transition to the existing channel. The new channel shall slope at a minimum of 0.5% slope, unless the Owner accepts a flatter slope.

Connections to existing manholes shall be coordinated through the Engineer with a minimum of 24 hours' notice. The The Confederated Tribes of the Chehalis Reservation's representative shall be on-site prior to manhole core drilling and during connection. In addition, the Contractor shall notify Wastewater Operations at 564-999-0510 24 hours prior to performing the work.

7-05.3(5) Pre-Cast Concrete Drywells *New Section*

Add the following new section:

7-05.3(5) Pre-Cast Concrete Drywells

This provision covers the work required for removal and installation of precast concrete drywells, connecting to existing drywells and restoration of drywells partially exposed for trench excavation.

Prior to connecting to an existing drywell the Contractor shall clean the existing drywell of debris, soil, and water by vactoring.

Precast concrete drywells shall be constructed or replaced per the standard details as shown on the plans and as directed by the Engineer. Alternate drywells equal and similar to those shown on the plans may be furnished subject to the approval of the Engineer, in writing.

All cement concrete for the precast sections shall be Class "4000" meeting the requirements of Section 6-02 of the Standard Specifications. All components of the dry well shall be subject to the inspection and approval of the Engineer. The Contractor at his expense shall replace any defective component.

The cast-in-place concrete cap shall be poured to the diameter of the excavation.

Concrete caps disturbed when connecting to existing drywells or drywells partially exposed for trench excavation may be replaced with controlled density fill (CDF). The CDF shall be placed on fabric liner to protect the surrounding gravel backfill.

The Contractor shall replace the fabric liner, special backfill, and concrete cap as directed by the Engineer for drywells partially exposed for trench excavation.

7-05.4 Measurement

Delete this Section and replace with the following:

No separate measurement will be made for manholes, inlets, catch basins, and drywells.

7-05.5 Payment

Section 7-05.5 is deleted and replaced with the following:

Manholes for sewer mains at the WWTF shall be incidental to the bid item “WWTF Improvements” and no separate payment will be made.

7-08 GENERAL PIPE INSTALLATION REQUIREMENTS

7-08.2 Materials ***Revision***

This Section is replaced with the following:

Pipe Bedding	**7-08.3(1)C**
Imported Trench Backfill	**9-03.14(1)**

7-08.3 Construction Requirements

7-08.3(1) Excavation and Preparation of Trench

7-08.3(1)A Trenches *Revision*

The first paragraph of Section 7-08.3(1) is replaced with the following:

The length of trench excavation in advance of pipe laying shall be kept to a minimum and in no case shall exceed 150 feet unless specifically authorized by the Engineer.

The second paragraph of Section 7-08.3(1) is deleted.

The third paragraph of Section 7-08.3(1) is replaced with the following:

The trench shall be of such width to permit workmen to satisfactorily install the pipe and structures, and to provide safe working conditions for the Contractor's employees and the Engineer's representatives for testing and observation in accordance with federal, state and local requirements. In the event the Plans or specifications impose limitations on trench width, the Contractor shall provide adequate shoring to provide safe working conditions.

For common excavation the depth to be excavated below the pipe invert elevation shall be 4-inches where native material does not meet pipe zone specifications, in the written opinion of the Engineer, and 6-inches for rock excavation.

Pipe bell holes shall be provided at each piping joint to permit the joint to be made properly and to ensure that the pipe is supported along the full length of the pipe barrel and not at the joint.

The sixth paragraph of Section 7-08.3(1) is replaced with the following:

Removal and Replacement of Unsuitable Foundation Material

When the material in the trench bottom is not adequate to support the pipe or manhole, the Engineer will require additional excavation up to 18" deep. The Contractor will then import, place and compact material to replace the unsuitable material. The bottom of the trench shall be backfilled to the bottom of the pipe zone or manhole base with crushed surfacing top course per Section 9-03.9(3). The Contractor shall notify the Engineer when such conditions are encountered.

The second sentence of the eleventh paragraph of Section 7-08.3(1) is replaced with the following:

The embankment material shall be compacted to 95% density for the top 2-feet and 92% for the remainder of the embankment material and the moisture content at the time of compaction shall be between optimum and 3 percentage points below optimum as determined by the Compaction Control Tests specified in Section 2-03.3(14)D, and the pipe installed in accordance with the Standard Plan.

Section 7-08.3(1)A is supplemented with the following:

Rock Excavation for Sanitary Sewer

When encountered, payment for "Rock Excavation" shall be limited to rock excavation requiring pneumatic drilling, hoe ramming, ripping, and hauling for removal of boulders exceeding one (1) cubic yard to complete trench excavation.

If a bid item for "Rock Excavation" is not included in the Bid Schedule, the cost of rock excavation shall be negotiated and payment will be included in a change order.

Trench Fence Penalty

At the end of each day's work the Contractor shall provide and install a safety fence completely around all excavations greater in depth than 24 inches below finish grade. The fence shall be a minimum 42-inch mesh wire or plastic with temporary steel posts. Plastic fence shall be a bright orange or other color acceptable to the Engineer. Wire fence shall be liberally marked with bright orange flagging acceptable to the Engineer. Each failure occurrence by the Contractor to install a safety fence completely around an excavation shall be subject to a penalty of $1,000. The penalty amount will be subtracted from the monies owed for work completed under this section. Since a penalty will be assessed for each excavation not completely fenced, multiple penalties may be assessed in a given day.

Stockpiles

Material stockpiles including trench excavation shall not block emergency entrance to side streets. Material stockpiles shall not remain more than 24 hours, excluding weekends and holidays, in any location.

Asphalt Concrete Pavement Removal

Where the plans and Bid Schedule quantities provide for full width pavement removal and replacement, the actual sewer main trench excavation limits may be less than or more than anticipated, and the Engineer may adjust pavement removal and replacement to a field determined width. The limited width would normally be a distance of 1.5-feet beyond the top of the trench, on each side, plus removal and replacement as required for side sewers plus additional removal as requested by the Engineer. Strips of asphalt less than 6.0-feet wide will be removed at the discretion of the Engineer.

Trench Excavation Safety System

The Contractor shall provide a Trench Excavation Safety System, per Chapter 39.04 RCW, meeting the provisions of the Washington Industrial Safety and Health Act, Chapter 49.17 RCW for all trenches in excess of 4-feet deep.

The Engineer will not review, approve, or have any liability for the adequacy of the Contractor's Trench Excavation Safety System.

Soil Information

A geotechnical report is not provided. The Contractor shall make its own interpretation and conclusions on geotechnical conditions, as per Section 1-02.4.

7-08.3(1)C Bedding the Pipe *Revision*

The first sentence in the second paragraph of Section 7-08.3(1)C is replaced with the following:

> Pipe zone bedding shall be as specified in the Standard Plans and shall be placed in loose layers and compacted to 92 percent maximum density.

The third and fourth sentences in the second paragraph of Section 7-08.3(1)C is replaced with the following:

> The Contractor shall compact the bedding with a "J" bar or similar device as accepted by the Engineer. A maximum of 6-inches of bedding material shall be placed before use of the "J" bar.
>
> Bedding material shall be placed a minimum of 12-inches horizontally to each side of the pipe to facilitate compaction of the bedding material. Bedding material shall be placed to a minimum depth of 12-inches above the pipe prior to backfilling.
>
> The Contractor shall furnish and install bedding material meeting the requirements of one of the following materials:
>
> 1. Crushed Surfacing Top Course, Section 9-03.9(3), or
>
> 2. A clean sand/gravel mixture free from organic matter and conforming to the following gradation:

Sieve Size	Percent Passing
¾" square	100
U.S. No. 4	50-100
U.S. No. 200	0-15

> No alternative material will be used.
>
> The provisions of Section 1-06.2(2), Statistical Evaluation of Materials for Acceptance, shall not apply to imported bedding.
>
> No payment shall be made for bedding material not meeting the gradations limits specified. The Engineer may require removal of imported bedding material that has been installed but does not meet the specifications.

The third paragraph of Section 7-08.3(1)C is deleted.

7-08.3(2) Laying Pipe *Replacement*

7-08.3(2)A Survey Line and Grade

Delete the contents of Section 7-08.3(2)A and replace the following:

> The Contractor shall provide all construction staking required for installation of the pipe. The Engineer will provide the Contractor the benchmark elevations and a description of the benchmark prior to the start of construction.

7-08.3(3) Backfilling *Revision*

The first sentence of the third paragraph of Section 7-08.3(3) is replaced with the following:

Pipe zone backfill shall be placed in loose layers and each layer compacted to 95% maximum density for the top 2-feet and 92% for the remainder of the backfill.

The third and fourth sentences of the fourth paragraph of Section 7-08.3(3) is replaced with the following:

Backfill shall be compacted to at least 90% of maximum density in non-road areas and to at least 95% of maximum density for the top 2-feet and at least 92% of maximum density for the remainder of the backfill in trenches in road areas.

The last sentence of the fourth paragraph of Section 7-08.3(3) is replaced with the following:

Materials determined by the engineer to be unsuitable for backfill at the time of excavation shall be removed and replaced with suitable back fill material. Payment shall be made under the item “Removal and Replacement of Unsuitable Material”, per cubic yard.

Section 7-08.3(3) is supplemented with the following:

The Contractor shall provide, place and consolidate imported backfill to compensate for lost volume of native material due to compaction to specified density and/or removal of unsuitable material, where authorized by the Engineer. The Engineer shall be notified 24 hours prior to placing imported backfill.

Imported backfill shall be excess excavated trench material from other areas of the project or material imported from an outside source. Imported backfill shall be uniformly graded, free of topsoil, organic matter, and frozen soil. Imported Trench Backfill shall meet the requirements of Section 9-03.14(1) Gravel Borrow.

The lift thickness shall be based on the Contractor's ability to maintain the proper compaction throughout the entire depth of the lift as verified by compaction test results. The maximum lift thickness shall be 18-inches unless approved by the Engineer.

When requested by the Engineer, the Contractor shall excavate, including backfill and re-compaction, to the depth requested by the Engineer for density testing at no additional cost to the Owner.

Native material in the bottom of the trench disturbed by the bucket teeth or the Contractor's operation shall be re-compacted with a vibratory or mechanical compactor acceptable to the Engineer before laying the pipe.

The top 2-feet of the pipe trench shall be free of asphalt concrete pavement larger than 1½-inch.

Drywell rock encountered in trench excavation shall be mixed with the native material so as not to exceed 25% by weight.

Asphalt pavement used in trench backfill shall be mixed with the native material so as not to exceed 25% by weight.

When using a Hydraulic Excavator for backfilling, the equipment must be greater or equal to the equipment used for excavation in both horsepower and operating weight.

7-08.3(4) Plugging Existing Pipe *Revision*

The first sentence of Section 7-08.3(4) is replaced with the following:

Where shown in the Plans or where designated by the Engineer, existing pipes greater than nominal 4” diameter shall be plugged on the exposed open end for a distance of two pipe diameters with commercial concrete, mortar, or material approved as equal by the Engineer.

7-08.3(5) Marking Tape *New Section*

Add the following new section:

7-08.3(5) Marking Tape

Marking Tape shall be installed over all utilities. The tape shall be placed at the location where shown on the plans, or if not shown, approximately 18 inches above the top of the pipe over the entire length of the pipe. Marking tape shall meet the requirements of Section 9-15.18.

7-08.4 Measurement *Revision*

Section 7-08.4 is supplemented with the following:

There will be no specific unit of measurement for lump sum item “Trench Excavation Safety System."

For the sewer work, the “Estimated Quantities” for each item are shown on the plans. These quantities are “For Information Only”, and for a general overview of the project. Field conditions may vary from those assumed and actual quantities may be more or less than indicated or in different locations. These variations are not “Changes” as defined by the Contract

Measurement of the Trench Excavation Safety System -Sewer will be by the linear foot measured along the centerline of the pipe for the main line and will also include the centerline length of side sewer pipe.

Imported pipe bedding will be field measured by the linear foot along the centerline of pipe where the Engineer requests imported bedding.

7-08.5 Payment *Supplement*

Section 7-08.5 is supplemented with the following:

Payment for removal, hauling and disposal of excess backfill is incidental to the cost of pipe installation.

All costs associated with excavation (except Trench Rock Excavation), bedding, and backfilling in the installation of stormwater, sewer and water piping shall be included in the unit Contract Price per foot for the size and type of pipe being jointed.

The Contractor shall include all costs of doing the sewer work within the unit bid prices. If the contract plans, contract provisions, addenda, or any other part of the contract requires work that has no unit price in the proposal form, the cost of such work shall be incidental and included within the unit bid prices in the contract.

Payment will be made in accordance with Section 1-04.1 for the following bid items:

Trench Excavation Safety System	Per Linear Foot
Imported Trench Backfill	Per Linear Foot
Imported Pipe Bedding	Per Linear Foot

"Trench Excavation Safety System”, lump sum.

The linear foot Contract price for "Trench Excavation Safety System" shall be full pay for furnishing all tools, labor, equipment, and materials required for all work to furnish and install a safety system meeting all applicable state and federal requirements for all storm drain and water system associated work. Payment for the "Trench Excavation Safety System" shall not be construed as acceptance or approval of the Contractor's Trench Excavation Safety System.

Payment for the trench fence will be considered incidental to the cost of pipe installation.

Payment for imported trench backfill will be limited to the length of pipe where the Engineer authorizes imported trench backfill.

"Imported Trench Backfill" per linear foot.

The unit Contract price per linear foot for "Imported Pipe Bedding" shall include the cost of all labor and material required for the hauling, placing and compaction of the trench backfill material.

Payment for imported pipe bedding will be limited to the length of pipe where the Engineer authorizes imported bedding.

"Imported Pipe Bedding" per linear foot.

The unit Contract price per linear foot for "Imported Pipe Bedding" shall include the cost of all labor and material required for the hauling, placing and compaction of the pipe bedding material.

7-11 Vacant *Replacement*

Section 7-11 is deleted and replaced with the following:

7-11 Utility Casting Adjustments

7-11.1 Description

This section covers the adjustment of existing water valves boxes, manhole lids and other utility castings within the trench area.

7-11.2 Materials

Adjustment materials shall conform to Section 5-04.3(13).

7-11.3 Construction Requirements

The location of utility casings shown on the Plans are estimates only. The Contractor shall set the rim elevations in accordance with Section 5-04.3(13).

7-11.4 Measurement

No separate measurement will be made for adjusting existing utility castings.

7-11.5 Payment

No separate payment will be made for adjusting existing utility casings, lids, and covers to finished grade. This work shall be considered incidental to other bid items.

7-17 SANITARY SEWERS

7-17.2 Materials *Supplement*

Section 7-17.2 is supplemented with the following:

ABS Composite Pipe, and Vitrified Clay Pipe shall not be used on this project.

Repair couplings are subject to the approval of the Engineer. No "Calder Type" couplings will be allowed.

All fittings, except PVC Tees and Wyes, shall meet the same specifications as the pipe. PVC Tees and Wyes installed in the sewer main shall meet the specifications for ASTM D-3034 SDR 26 and shall be as manufactured by GPK, Multi-Fitting, Plastic Trends or approved equal.

Where service connections are to be installed on existing sewer lines, refer to the requirements in Section 7-18.3(1) "Side Sewers – General – Tap & Connect to Existing Sewer".

<u>Force Mains – Materials</u>

Pressure pipe within the Community System shall be ASTM D2241, 200 psi (SDR 21) Polyvinyl Chloride (PVC) pipe. Pipe gaskets shall meet the requirements of ASTM F 477. Pressure pipe with solvent welded joints may be substituted meeting the requirements of ASTM D2564, ASTM D2672, ASTM D2949 and ASTM D1785. Concrete thrust blocks will be required at all changes in direction and at all horizontal and vertical bends if restrained joint fittings are not used. Restrained joints shall include either solvent weld or a mechanical fitting specifically made for PVC pipe.

Pressure pipe to be used for the dual-wall installation as shown on the plans shall be ASTM D2241, 125 psi (SDR 32.5) Polyvinyl Chloride (PVC) pipe.

Pressure pipe within the Wastewater Facility shall be AWWA C900 Polyvinyl Chloride (PVC) pipe. Restrained joints shall include either solvent weld or a mechanical fitting specifically made for PVC pipe.

PVC Fittings for Force Mains

PVC fittings and elbows for 200 psi (SDR 21) pipe shall be Schedule 40 PVC with solvent welded joints meeting the requirements of ADTM D2564, ASTM D2949 and ASTM D1785.

<u>Ductile Iron Fittings for Force Mains</u>

Restrained joint fittings within the Wastewater Facility shall be ductile iron and shall be in accordance with AWWA C110 and/or C153, push on joints shall be in accordance with C111. Provide joints with ceramic epoxy lining, "Protecto 401" by U.S. Pipe or equal.

The minimum thickness for ceramic epoxy lining for Ductile Iron Pipe and Fittings shall be 40 mils.

Restrained joints shall be as stated in this provision, or approved equal. Any cut pipe shall be inspected for damage prior to installation. Megalug or similar restraint specifically made for PVC pipe shall be used on the force mains or bends.

Asphaltic outside coating shall be in accordance with ANSI/AWWA C151-A21.51 for pipe and ANSI/AWWA C110/A21.10 or ANSI AWWA C153.A21.53 for fittings.

Restrained push-on joints for fittings shall be designed for a water working pressure of 150 psi minimum.

Valves for force main isolation valve and In-line pig port/ cleanouts shall meet the requirements of 9-30.3(1) for 3" and 4" force mains. Valves for 2" and 1-1/2" force mains shall meet the requirements of ASTM C800 and shall be Ford B77 curb stop or approved equal..

Valve boxes for mainline shutoff valves shall comply with Section 9-30.3(4) of Standard Specifications with the exception of the cover shall have the word "Sewer" cast in it.

Tracing wire for force main and pressure side sewers shall be 10-gauge galvanized aluminum. Detectable marking tape for force main and pressure side sewers shall be 2-inch wide with encased aluminum wire, minimum 10 gauge and identified for buried sewer.

7-17.3 Construction Requirements *Supplement*

Section 7-17.3 is supplemented with the following:

When plans direct the mainline to be sleeved to protect nearby waterlines, the Contractor shall sleeve the mainline pipe with material meeting AWWA C900 minimum requirements or ¼-inch thick steel casing. The ends of the casing shall be plugged with grout to prevent soil and groundwater migration into the casing.

The sleeve shall be one continuous segment of pipe 20-feet in length, and shall be centered over the waterline crossing.

Tracer wire and detectable marking tape shall both be installed over all pressure sewer pipe, including side services. The wire shall duct taped to the top of the sewer pipe and shall be continuous its entire length. The tracing wire shall be directed vertically inside the mainline flushing connection points and service line curb stops and terminate approximately six inches below valve box or manhole cover. On the main line, the tracer wire shall be secured to the flushing connection assembly, or other structure as designated by the engineer, in a manner acceptable to the Engineer. Detectable marking tape shall be placed 12-inches above all force mains and pressure side sewers and shall be 2-inch wide with encased aluminum wire, minimum 10 gauge and identified as buried sewer.

Where a sewer main or force main crosses the existing asbestos cement (AC) waterline the Contractor may use the following methods:

- Remove and replace the existing AC waterline in the extents of the sewer mainline trench with C900 water class pipe. The new pipe and connection points shall extend a minimum of 3-feet past the trench disturbance limits on either side to ensure the connection point is on well compacted and stabilized subgrade.
- Wrap the exposed waterline in Polyethylene Encasement and provide CDF backfill for a length of 5 feet on either side of the watermain and a depth from the top of the side sewer pipe zone to the centerline elevation of the waterline.
- Provide a trenchless undercrossing. Contractor may submit alternative trenchless undercrossing methods for Engineer review and approval.

7-17.3(2) Cleaning and Testing

7-17.3(2)A General *Revision*

The first paragraph of Section 7-17.3(2)A is replaced with the following:

All sewers and appurtenances shall be reasonably clean prior to acceptance by the The Confederated Tribes of the Chehalis Reservation. All sewer mains and sewer service stubs shall be tested by the low-pressure air method.

7-17.3(2)F Low Pressure Air Test For Sanitary Sewers Constructed Of Non Air-Permeable Materials

Section 7-17.3(2)F is supplemented with the following:

Test Gauge

The Contractor shall provide a female quick coupling equal to AMFLO C 2 to fit a The Confederated Tribes of the Chehalis Reservation-supplied gauge with an AMFLO CP2 male fitting. The Contractor shall also continue to supply a gauge that can be monitored concurrently with the The Confederated Tribes of the Chehalis Reservation's gauge.

7-17.3(2)H Television Inspection

Section 7-17.3(2)H is supplemented with the following:

Television inspections are performed to assure the Engineer that the Contractor's work complies with the contract documents. Refer to section 1-05.6 regarding inspection of workmanship and materials.

The entire length of mainline new gravity drain pipe at the WWTF shall be television inspectedby the Contractor. The Contractor shall cooperate fully with the Engineer in preparing the lines for television inspection. Any costs associated with this preparation, including but not limited to making manholes accessible for video equipment and jetting and vactoring the lines, shall be incidental to other bid items and no separate payment will be made. Further, the Contractor shall schedule the pre-pavement television inspections to allow the work to be completed prior to paving. The contractor shall reintroduce a minimum of five gallons of water to each segment of sewer main immediately prior to the TV inspection process. The cost for the additional water will be incidental to other work.

7-17.3(2)I Pressure Test for Force Main *New Section*

Add the following new Section 7-17.3(2)I:

7-17.3(2)I Pressure Test for Force Main

The force main shall be hydrostatically tested with a pressure of 100 psi at the upstream (lower) end for 15 minutes. The force main shall be tested with only the blind flange in place. A test plug shall be used only at the discharge manhole connection point.

Testing of the force main and all side sewers for individual services (i.e. 1-1/4" PVC pipe)shall comply with Section 7-09.3(23) of the Standard Specifications for Road and Bridge Construction, with the following modifications:

First Sentence: The testing pressure shall be 100 psi.

Delete Paragraphs 7 and 8. No loss in pressure will be allowed.

Delete Paragraph 12.

Testing shall be done both prior to any final paving has been completed.

7-17.3(2)J End Pipe Maker *New Section*

Add the following new Section 7-17.3(2)J:

7-17.3(2)J End Pipe Maker

The Contractor shall mark the location of capped mains at the location shown on the plans with a 2-inch by 4-inch board that extends from the top of the side sewer riser to within 6-inches below the top of the ground. An 18-inch length of ½-inch rebar shall be secured to the top portion of the board and set at 6-inches below grade.

7-17.3(2)K Restorations

7-17.3(2)K Restorations

7-17.3(2)K(1) Description

This work shall consist of removing and replacing existing plants, lawn sod and topsoil, where requested by the Engineer, as shown on the Plans, or required within the excavation limits for mainline sewer force main installation and pump stations.

The Contractor, at his option, may remove and replace existing sod and plant material or provide new sod and plant material of similar type and variety, as approved by the Engineer. New topsoil shall be provided at all sod installation locations per Section 8-02.3(16).

The Contractor shall preserve and protect all fencing, landscaping, decorations, and other property features. Any features that are damaged during construction shall be repaired or replaced to meet existing condition or better.

7-17.3(2)K(2) Fertilizers

Fertilizer shall be applied uniformly at the rate of 210 pounds per acre for seeded areas and 4 pounds of available nitrogen per 1,000 square feet for sod areas.

7-17.3(2)K(3) Bark or Wood Chip Mulch

Mulch materials in landscaped areas shall be installed to match existing surrounding areas and raked out to present a finished appearance.

7-17.3(2)K(4) Plant Establishment

The Contractor shall be responsible for re-establishment of all plant material removed or disturbed by his operations. The Contractor shall replace unacceptable material, straighten plants that lean or sag, adjust plants that settle and perform any other procedure consistent with good horticultural practice necessary to ensure establishment of healthy growth. The Contractor is responsible for the initial watering. Spokane County cannot guarantee the property owners will adequately water the plant material.

The Contractor shall repair all damages and replace during the next planting season any plant material not in a healthy growing condition. This work shall be done at the Contractor's expense.

7-17.3(2)K(5) Lawn Installation

Lawn areas will be sodded unless otherwise designated by the Engineer. Seed for seeded lawn areas will be uniformly distributed at the rate of 250 pounds per acre.

In areas where removal and replacement of existing lawn sod is feasible, the sod shall be removed to a uniform depth of 2-inches with an approved type of sod cutter. Existing lawn sod shall be neatly cut into convenient sized strips, placed in neat piles within close proximity, dampened and shaded when possible. Existing lawn sod strips shall be maintained in a damp condition continuously until the strips are replaced on the lawn. Lawns shall be replaced within 10 days of the sewer installation on a given parcel. In no case shall the sod remain stockpiled longer than two days before replacement on the lawn.

Topsoil will be evenly spread to a depth of 2-inches over seeded lawn areas or sod areas and cultivated into the top 6-inches of existing subsoil.

Topsoil shall be Sandy Loam in accordance with the procedures and requirements for topsoil, Section 9.14.1 of these Special Provisions.

7-17.3(2)K(6) Lawn Installation

All sod shall be guaranteed to survive in a healthy condition through an establishment period of 30-days. The establishment period shall commence on the date of acceptance of placed sod by the Engineer. All sod which in the opinion of the Engineer is not in a healthy growing condition at the end of the establishment period shall be removed and replaced by the Contractor at his own expense. Sod that is replaced shall be of the same mixture and grade as the surviving sod and shall be subject to an additional 30-day establishment period.

7-17.4 Measurement *Revision*

The second paragraph of Section 7-17 is deleted.

Section 7-17 is supplemented with the following:

For the sewer work, the "Estimated Quantities" for each item are shown on the plans. These quantities are "For Information Only", and for a general overview of the project. Field conditions may vary from those assumed and actual quantities may be more or less than indicated or in different locations. These variations are not "Changes" as defined by the Contract

"___-Inch PVC Force Main w/ Fittings, Excavation and Backfill", shall be measured by the linear foot of actual sewer main installed. Measurement will be through fittings valve and appurtenances.

"1-1/4" Service Connection to Force Main", shall be measure per each connection installed.

"4-Inch PVC Force Main/Dual Wall w/ Fittings, Excavation & Backfill," shall be measured by the linear foot of actual dual wall sewer force main installed.

"2 Inch Force Main Valve" shall be measured per each and include all material related to the complete installation and adjustment of the valves and valve box assembly.

"Isolation Valve 4 Inch" shall be measured per each and include all material related to the complete installation and adjustment of the valves and valve box assembly.

"1" Air/Vac Release Valve & Vault" shall be measured per each and include all material related to the complete installation and adjustment air/vac valves and vault.

"In-Line Pig Port/Cleanout", shall be measured per each and include all material related to the complete installation and adjustment of the in-line pig port/cleanout assembly as shown on the plans..

No separate measurement will be made for restorations or testing of force main pipe.

7-17.5 Payment *Revision*

Section 7-17.5 is deleted and replaced with the following:

The Contractor shall include all costs of doing the sewer work within the unit bid prices. If the contract plans, contract provisions, addenda, or any other part of the contract requires work that has no unit price in the proposal form, the cost of such work shall be incidental and included within the unit bid prices in the contract.

Payment will be made in accordance with Section 1-04.1 for the following bid items:

“_-Inch PVC Force Main w/Fittings, Excavation and Backfill”	Per Linear Foot
“1-1/4 Inch Service Connection to Force Main”	Per Each
”4-Inch PVC Force Main/Dual Wall w/Fittings, Excavation & Backfill”	Per Linear Foot
” 2 Inch Force Main Valve”	Per Each
”Isolation Valve 4 Inch”	Per Each
”1” Air/Vac Release Valve & Vault”	Per Each
“In-Line Pig Port/Cleanout”	Per Each

The unit contract price per linear foot for “___-Inch PVC Force Main w/ Fittings, Excavation and Backfill” shall be full pay for all trench excavation and backfill (unimported) below finished subgrade, furnishing, hauling and assembling in place the complete installation including all special fittings, testing, joint materials, end pipe markers furnishing and placing unimported pipe bedding, and all trench compaction below subgrade. No separate payment will be made for the single 6” PVC casing across Niedeman Road for the 2” force main on Plan Sheet 23 or four (4) 3” PVC casings that cross the access road for individual 1-1/4” services on Plan Sheets 21 and 22.

The unit contract price per each for “1-1/4 Inch Service Connection to Force Main” shall be full pay for all fittings, equipment, testing, labor, tools and materials necessary to complete the connection of the service line to the pressure force main.

The unit contract price per linear foot for “4-Inch PVC Force Main/Dual Wall w/ Fittings, Excavation & Backfill,” shall be full pay for all trench excavation and backfill (unimported) below finished subgrade, furnishing, hauling and assembling in place the complete installation including all special fittings, joint materials, end pipe markers, testing, furnishing and placing unimported pipe bedding, and all trench compaction below subgrade. Exterior force main will not require testing.

Payment for “Gate Valve 2 Inch” shall be full pay for all labor, materials, tools, equipment and excavation and backfill necessary to complete installation according to the plans and specifications. The Contractor shall provide valve key to The Confederated Tribes of the Chehalis Reservation.

Payment for “Isolation Valve 4 Inch." shall be full pay for all labor, materials, tools, equipment and excavation and backfill necessary to complete installation according to the plans and specifications. The Contractor shall provide valve key to t The Confederated Tribes of the Chehalis Reservation.

Payment for “1” Air/Vac Release Valve & Vault” shall be full pay for all labor, materials including the valve vault, tools, equipment and excavation and backfill necessary to complete installation according to the plans and specifications.

Payment for “In-Line Pig Port/Cleanout" shall be full pay for all labor, materials, fittings, tools, equipment and excavation and backfill necessary to complete installation according to the plans and specifications.

Restoration of lawn and landscape areas shall be considered incidental to other bid items and no separate payment will be made.

Temporary 2” PVC bypass line shown on Sheets 5, 6 and 7 along with connection to existing Community Center Pump Station on Sheet 9 shall be considered incidental to other bid items and no separate payment will be made. Contractor is not required to install this pipe, but is identified as an option if the existing sewer pipe can remain in service during construction.

All costs for labor, material and equipment required to conduct the leakage tests required in Section 7- 17.3(2) and 7-18.3(3) shall be considered incidental to and included in the unit contract price per linear foot for sewer pipe of the kind and size specified and no additional payment shall be made.

Gravity sewers, force mains, manholes, valves, valve vaults, oil water separator vault and all associated piping, fittings, pump station and appurtenances for sewer work at the WWTF shall be considered incidental to the bid item “WWTF Improvements” and no separate payment will be made.

Payment of 50% of the unit contract price for force main sewer pipe and side sewer pipe may be made after the pipe is installed, tested, and flushed.
Full payment shall not be made for main line sewer pipe until the full width of the road subgrade has been rough-graded within -0.25 to +0.25 feet of its final grade, and vehicular access has been re-established for the adjacent properties.

7-18.3(6)

DIVISION 8
MISCELLANEOUS CONSTRUCTION

8-01 EROSION CONTROL AND WATER POLLUTION CONTROL

8-01.1 Description
Section 8-01 is deleted and replaced with the following:

The Contractor shall apply best management practices to protect the work area, haul routes and surrounding areas from erosion and pollutants from entering water bodies and storm drain systems in accordance with Tribal codes.

8-01.3(1)A Submittals

8-01.3(1)A1 Temporary Erosion and Sediment Control Plan

Delete this Section in its entirety.

8-01.3 Construction Requirements

8-01.5 Payment

8-01.5(1) Lump Sum Bid for Project (No Unit Items) *Supplements*

Section 8-01.5(1) is supplemented with the following:

Payment will be made for each of the following bid items:

Erosion and Sediment Control	Lump Sum

The lump sum Contract price "Erosion and Sediment Control", shall be full payment for furnishing tools, labor, equipment, and materials required to install silt fence, wattles or other best management practices required to prevent silt from leaving the work area and from erosion of the work and surrounding areas.

8-02 ROADSIDE RESTORATION

8-02.3(9)B Seeding and Fertilizing *Revision*

The fourth paragraph of section 8-02.3(9)B is revised to read the following:

Dryland Seed Mixture
Grass seed shall be of the following composition, proportion and quality:

1. Sheep Fescue 35%
2. Hard Fescue 35%

3. Armadillo Hybrid Bluegrass 20%

4. Perennial Ryegrass 10%

Seeds shall be certified "Weed Free", indicating there are no noxious or nuisance weeds in the seed.
Seeds shall be applied at 7 pounds per 1000 square feet.

Mulching Material
Mulching shall be applied at a rate of 2500 lbs. per acre for hydroseeding operations, and shall meet the requirements for Long-Term Mulch, per WSDOT Specification Section 9-14.4(2)A and can be applied in a single pass

Water
Clean, fresh and free of substances or matter which could inhibit vigorous growth of grass.

Herbicide
Prohibited from use on any part of this project.

Fertilizer
FS O-F-241, Type 1, Grade A; recommended for grass, with the following proportions:

1. Nitrogen 18%

2. Phosphoric Acid 10%

3. Soluable Potash 10%

4. Sulphur 7 %

5. Fertilizer shall be applied at 8 pounds per 1000 square feet:

Hydroseeding

1. Apply seeded slurry with a hydraulic seeder evenly in two intersecting directions.

2. Mulch/tackifier to be applied as part of the slurry mix, and shall be applied to a thickness of 1/8 inches. Maintain clear of shrubs and trees.

3. Apply water with a fine spray immediately after each area has been mulched.

4. Seed shall be applied within the following windows only:
   a) Spring Seeding: February 15 to March 15

   b) Fall Seeding: September 15 to November 15

8-02.4 Measurement *Supplement*

Section 8-02.4 is supplemented with the following:

"Surface Restoration – Seeding Sodding, Top Soil." No separate measurement will be made for Surface Restoration – Seeding Sodding, Top Soil.

8-02.5 Payment *Supplement*

Section 8-02.5 is supplemented with the following:

Payment will be made in accordance with Section 1-04.1 for the following bid items:

Surface Restoration – Seeding Sodding, Top Soil."	Per Lump Sum

"Seeding, Fertilizing, and Mulching", per square yard

"Topsoil Type ___, ___ In. Depth" per square yard.

The unit Contract price per square yard for "Topsoil Type ___, ___ In. Depth" shall be full payment for all costs for the specified Work including pre-excavation weed control, excavating, loading, hauling, intermediate windrowing, stockpiling, weed control on stockpiles or windrows, and removal, placing, spreading, processing, cultivating, and placing the specified topsoil type.

8-03 IRRIGATION SYSTEMS

8-03.3 Construction Requirements

8-03.3(15) Existing Irrigation System Restoration *New*

Add the following new section:

8-03.3(15) Existing Irrigation System Restoration

The Contractor, in the presence of the Engineer, shall meet with the property Owner prior to excavation and removal work. The Contractor and Owner shall test the existing system to verify that it currently is operational. The Contractor and Owner, during the meeting shall identify and flag all existing sprinkler head locations; piping locations; and valve locations.

Any modifications necessary to relocate and restore private property irrigation systems will be field directed by the Engineer.

The Contractor shall conduct excavation operations in a manner that will protect existing irrigations systems. Any irrigation systems damaged as a result of the Contractor's operation shall be repaired by the Contractor to the satisfaction of the Engineer at no cost to the The Confederated Tribes of the Chehalis Reservation.

The Contractor shall flush and test all lines in the system after completion of any modifications. All tests shall be conducted at existing residential household pressure. If head coverage or pressure is not satisfactory to the Owner, the Contractor will replace heads and re-flush the

8-04 CURBS, GUTTERS, AND SPILLWAYS

8-04.3 Construction Requirements

8-04.3(1) Cement Concrete Curbs, Gutters, and Spillways *Revision/Supplement*

The first paragraph of Section 8-04.3(1) is revised to read:

Cement concrete curb, curb and gutter, gutter, and spillway shall be constructed with air entrained commercial concrete with a minimum compressive strength at 28 days of 4,000 psi in accordance with AASHTO T22.

Section 8-04.3(1) is supplemented with the following:

Expansion joints shall extend the full section and depth of the curb. Expansion joints in the curb or curb and gutter shall be spaced at 100-foot intervals, the beginning and ends of the curb returns, drainage structures, bridges, connections with existing curbing, and match joint locations of adjacent sidewalk.

The Contractor shall place and compact crushed surfacing top course below the curbs, gutters and spillways in accordance with the plans, compacted to the requirements of Section 4-04.

8-04.5 Payment *Supplement*

Section 8-04.5 is deleted and replaced with the following:

Replacement of curbs, gutters, and spillways removed or damaged by construction shall be considered incidental to other bid items and no separate payment will be made.

8-06 CEMENT CONCRETE DRIVEWAY ENTRANCES

8-06.3 Construction Requirements *Revision/Supplement*

The first paragraph of Section 8-06.3 is revised to read:

Cement concrete driveway approaches shall be constructed with air entrained commercial concrete with a minimum compressive strength at 28 days of 4,000 psi in accordance with AASHTO T22.

Section 8-06.3 is supplemented with the following:

The Contractor shall place and compact crushed surfacing top course below the driveway entrance or approach in accordance with the plans, compacted to the requirements of Section 4-04.

8-06.4 Measurement *Supplement*

Section 8-06.4 is supplemented with the following:

No separate measurement will be made for cement concrete driveway entrances

8-06.5 Payment *Supplement*

Section 8-06.5 is supplemented with the following:

Replacement of existing cement concrete driveway entrances removed or damaged during construction shall be incidental to other bid items and no separate payment will be made.

8-13 MONUMENT CASES

8-13.1 Description *Supplement*

Section 8-13.1 is supplemented with the following:

This work also includes salvaging the existing monument; coring the asphalt or setting the monument case within concrete pavement; furnishing and placing the monument case; adjusting the existing monument case; and coordinating with a The Confederated Tribes of the Chehalis Reservation's Consultant Surveyor who will re-establish the restored point on the set monument within the monument case.

8-13.2 Materials *Supplement*

Section 8-13.2 is supplemented with the following:

Monument shall be furnished by the Contractor. The case, pipe and cover shall be furnished by the Contractor. The Case and pipe shall conform to details on the Plans.

8-13.3 Construction Requirements *Revision*

The last paragraph of Section 8-13.2 is deleted and replaced with the following:

The Contractor shall salvage the existing monument and deliver it to the Engineer.

The Contractor shall furnish and install the monument case and the monument anchor pipe. The Contractor shall set the monument in cement epoxy with a minimum compressive yield strength of 5,000 psi.

The Contractor's Surveyor shall furnish, install, label, and mark the monument inside the monument case.

When surrounded by hot mix asphalt pavement, a new monument case or adjustment of an existing monument case shall be set after the first lift of paving is completed. The Contractor shall center the case on the monument. The Contractor shall place the final HMA lift around the case so that the top of the monument cover shall be recessed below the surrounding pavement elevation in accordance with Section 5-04.3(13).

When surrounded by Portland Cement Concrete pavement the monument case shall be placed in the formwork prior to placing the concrete. The top of the monument cover shall be recessed below the surrounding pavement elevation in accordance with Section 5-04.3(13).

8-13.4 Measurement *Supplement*

8-13.5 Payment *Supplement*

Section 8-13.5 is supplemented with the following:

Resetting monuments, cases and cover shall be incidental to other bid items and no separate payment will be made

8-14 CEMENT CONCRETE SIDEWALKS

8-14.3 Construction Requirements *Replacement*

Section 8-14.3 is deleted in its entirety and replaced with the following:

The concrete in sidewalks and curb ramps shall be constructed with air entrained commercial concrete with a minimum compressive strength at 28 days of 4,000 psi in accordance with AASHTO T22.

When the sidewalk is adjacent to curb, the expansion and contraction joint locations shall match the joints in the curb or curb and gutter.

The Contractor shall use fibrous expansion material, full depth of sidewalk, ramp or driveway, in all expansion joints. The on-site inspector shall verify all expansion material prior to pouring concrete.

8-14.3(1) Excavation

8-14.3(1)A Crushed Surfacing *New Section*

Add the following new section:

8-14.3(1)A Crushed Surfacing

The Contractor shall place and compact crushed surfacing top course below the sidewalk or curb ramp in accordance with the plans, compacted to the requirements of Section 4-04.

8-14.3(3) Placing and Finishing Concrete *Supplement*

Section 8-14.3(3) is supplemented with the following:

When the sidewalk is adjacent to curb, the expansion and contraction joint locations shall match the joints in the curb or curb and gutter.

Embossing the Contractor's logo into the finish concrete is not allowed.

8-14.3(4) Curing *Replacement*

Section 8-14.3(4) is deleted and replaced with the following:

The curing materials and procedures outlined in Section 5-05.3(13) shall apply, except that white pigmented curing compound shall not be used on sidewalks. The curing agent shall be applied immediately after brushing and be maintained for a period of 5 days.

The curing period for sidewalks shall be a minimum of 3 days. The curing period for driveways shall be a minimum of 7 days. During the curing period, traffic, both pedestrian and vehicular, shall be excluded by barriers furnished and erected by the Contractor. If methods of construction cannot exclude pedestrian or vehicular traffic, the Contractor shall use a high-early strength concrete with the prior approval of the Engineer. In this case, the sidewalk or driveway shall remain closed until the concrete reaches a minimum of 2500 PSI compressive strength, provided that vehicular traffic may be excluded for such additional time, as the Engineer may direct.

8-14.5 Payment

Section 8-14.5 is deleted and replaced with the following:

Replacement of existing sidewalk removed or damaged during construction shall be incidental to other bid items and no separate payment will be made.

8-22 PAVEMENT MARKINGS

8-22.1 Description *Supplement*

Section 8-22.1 is supplemented with the following:

Contractor shall replace all pavement marking in kind where markings are removed by trench excavation.

8-22.2 Materials *Supplement*

Section 8-22.2 is supplemented with the following:

The material for Plastic Line, Plastic Wide Lane Line, Plastic Stop Line, Plastic Crosswalk Line, Plastic Bicycle Lane Symbol and Plastic Traffic Arrow shall meet the requirements of Type B Preformed Fused Thermoplastic as specified in Section 9-34.3(2) or Type C-1 tape as specified in Section 9-34.3(3) of the Standard Specifications. The Contractor shall identify the reflective properties of the Type B material in the submittal. All Type B material installed on the project shall have the same reflective properties.

Paint for painted lines shall be SWARCO 1160 series (1000 scrub), Sherwin Williams Hotline waterborne 2248 (white)/2259 (yellow), or Ennis-Flint Highbuild Fast Dry Waterborne 985221(white)/985222(yellow)

8-22.3 Construction Requirements

8-22.3(1) Preliminary Spotting *Revision*

The first sentence of Section 8-22.3(1) is replaced with the following:

The Contractor shall provide preliminary spotting of the lines for Engineer Approval, before marking begins, based on his construction staking control.

8-22.3(5) Installation Instructions *Supplement*

Section 8-22.3(5) is supplemented with the following:

Pavement Markings-Durable
The Contractor shall install the Type C-1 markings per the manufacturer's specification for hot inlay application only. The manufacturer's installation instructions shall be included with the Request for Approval of Materials (RAM) submittal.

The Contractor shall supplement the manufacturer's Type C-1 markings installation instructions with the following:

The Contractor shall provide a dedicated ten ton steel-drum finish roller (no vibration) for the marking installation. The markings should be placed at least 4 inches from any asphalt seam or crown. Type C-1 markings must be installed when the paved asphalt temperature is between 160ºF and 130ºF, for hot inlay application.

If the paved asphalt temperature drops below 130ºF, the Contractor shall immediately stop the installation of the Type C-1 markings and place temporary pavement markings (per section 8-23 of the standard specifications) for the remaining paved asphalt sections, so not to delay opening of the roadway. The remaining permanent pavement markings that were not installed within the temperature range must be installed with contact adhesive following the manufacturer's installation instructions for grooved pavement surface application using diamond cutting blades to groove the surface. The Contractor shall maintain the temporary markings until the permanent markings are installed.
Any additional costs to install and remove temporary pavement markings, groove cutting, groove/surfacing cleaning, additional traffic control, or any delay costs due to the Contractor's inability to install the markings within the temperature range shall be at the Contractor's expense.

Type B Preformed Fused Thermoplastic pavement marking shall not be over heated during application. Type B Preformed Fused Thermoplastic pavement markings that are pock-marked with bubbles will be rejected, and the Contractor shall pay all costs, including temporary traffic control, to remove by grinding and reinstall the material.

8-22.5 Payment

Section 8-22.5 is deleted and replaced with the following:

Pavement markings shall be incidental to other bid items. No separate payment will be made.

DIVISION 9
MATERIALS

9-03 AGGREGATES

9-03.8 Aggregates for Hot Mix Asphalt

9-03.8(2) HMA Test Requirements *Revision*

Item 1 in Section 9-03.8(2) is deleted and replaced with the following:

The number of ESAL's for the design and acceptance of the HMA shall be 3 million or greater.

9-03.8(3) Grading

9-03.8(3)B Gradation-Recycled Asphalt Pavement and Mineral Aggregate *Revisions*

The first sentence of Section 9-03.8(3)B is deleted and replaced:

The RAP utilized in the production of HMA shall be sized prior to entering the mixer with 100 percent passing a 1 inch sieve so that a uniform and thoroughly mixed HMA is produced in the mixer.

9-03.12 Gravel Backfill

9-03.12(5) Gravel Backfill for Drywells *Replacement*

Section 9-03.12(5) is deleted and replaced with the following:

Special backfill for drywells shall consist of primarily unfractured, naturally occurring, free draining material conforming to the following gradation:

Sieve	% Passing
3"	100
1"	15
U.S. #200	2 max.

Fracture shall be 20 percent max.
All percentages are by weight.

9-14 EROSION CONTROL AND ROADSIDE PLANTING
9-14.1 Topsoil

9-14.1 Topsoil Type A *Supplement*

Section 9-14.1 is supplemented with the following:

Topsoil shall be delivered in an unfrozen and non-muddy condition and shall be approved by the Engineer prior to spreading and meet one of the following requirements:

Bio-infiltration Soil	**Specification**
pH	6.5 to 7.0
Cation Exchange Capacity	>15 meq/100g min
Treatment Infiltration Rate	0.25 to 0.50 in/hr

Or

Bio-infiltration Soil	**Specification**
% Total Organic Content by Weight	>2.0%
pH	6.5 to 7.0
Treatment Infiltration Rate	0.25 to 0.50 in/hr

(February 5, 2020)
Standard Plans

The State of Washington Standard Plans for Road, Bridge and Municipal Construction M21-01 transmitted under Publications Transmittal No. PT 16-048, effective September 3, 2019 is made a part of this contract.

The Standard Plans are revised as follows:

A-50.10
Sheet 2 of 2, Plan, with Single Slope Barrier, reference C-14a is revised to C-70.10

A-50.20
Sheet 2 of 2, Plan, with Anchored Barrier, reference C-14a is revised to C-70.10

A-50.30
Sheet 2 of 2, Plan (top), reference C-14a is revised to C-70.1

B-10.60
DELETED

B-82.20
DELETED

B-90.40
Valve Detail – DELETED

C-1
Delete Note 1.

Revise Note 2 to read “Remove all rail washers, also called “Snow Load Rail Washers”, when encountered during raising beam guardrail work and the guardrail raising work requires removal of the rail.

Re-number all notes.

C-4b
DELETED

C-4e
DELETED

C-8a
Delete “Section A-A, Type 4 Detail

C-20.11
Delete Notes 1 & 2. Re-Number all notes.
Delete “ Snow Load Post Washer” and “Snow Load Rail Washer” details.

C-20.19
DELETED

C-22.14
DELETED

C-22.16
Note 3, formula, was: “Elevation G = (Elevation S – D x (0.1) + 31” is revised to read: “Elevation G = (Elevation S – D x (0.1) + 31/12”

C-22.45
For the SOFTSTOP (TL-2) elevation view detail, the callout “SOFTSTOP (TL-2) SYSTEM LENGTH = 38’ – 4 1/2"” is revised to read “SOFTSTOP (TL-2) SYSTEM LENGTH = 38’ – 3 1/2"”.

C-40.14

DELETED

C-60.10

Sheet 1, Side Elevation: The bottom set of ① - #4 horizontal rebar (2x) located at the base of the barrier is repositioned to be aligned with the bottom of ② - #4 stirrup bars to match the bar positioning shown on Sheet 1, Section A.

Sheet 1, Reinforcing Steel Bending Diagram, ③ - Pin Slot Bar detail: Add the following callout to the detail, "HOT DIP GALVANIZE AFTER FABRICATION (ASTM A123 OR AASHTO M 111)".

Sheet 2, ANCHORING PIN ASSEMBLY DETAIL: The first line of the description under the title was "1 1/2" DIAMETER (ASTM A36), COLD ROLL" is now changed to "1 1/2" DIAMETER (ASTM A36), HOT ROLL".

C-70.10

Sheet 1, Note 1 was - "1. PERMANENT INSTALLATION requirements: Embed barrier 3" (in) minimum; …" is revised to read: "1. Installation requirements: Embed barrier 3" (in) minimum in asphalt or concrete; embed barrier 10" (in) minimum in soil; …"

Sheet 1, existing Notes 2 and 4 are deleted. Existing Note 3 is renumbered to Note 2.

Sheet 1, add new Note 3, "3. See Sheet 2 for barrier with a 2'-10" reveal installed in asphalt or concrete. See Sheet 3 for barrier with a 3'-6" reveal installed in asphalt or concrete."

Sheet 1, Elevation: The dimension from the barrier end to the barrier lifting slot was "3' – 4" (TYP)" is now changed to "4' – 8" (TYP)", and the barrier lifting slot dimension was "5' – 0" (TYP)" is now changed to "3' – 0" (TYP)".

Sheet 2, the detail titled "3' – 6" BARRIER FOR USE WITH A 0" (IN) TO 5" (IN) MAX. GRADE SEPARATION" has the following changes:
1. The detail title is changed to "3' – 6" BARRIER FOR USE WITH A 0" (IN) TO 4" (IN) MAX. GRADE SEPARATION".
2. The callout "GRADE SEPARATION--5" MAX." is changed to "GRADE SEPARATION--4" MAX."

C-75.10

Note 2 is deleted. Renumber subsequent notes.

C-75.20

Note 2 is deleted. Renumber subsequent notes.

C-75.30

Note 2 is deleted. Renumber subsequent notes.

C-85.11

Add new Note 3 "3. The intended use of this plan is for placing concrete barrier in front of bridge piers on bridge retrofit projects only. Contact the HQ Bridge traffic barrier specialist before using this barrier placement plan for projects involving new or reconstructed bridges."

C-85.14

DELETED

C-90.10

DELETED

D-10.10

Wall Type 1 may be used if no traffic barrier is attached on top of the wall. Walls with traffic barriers attached on top of the wall are considered non-standard and shall be designed in

accordance with the current WSDOT Bridge Design Manual (BDM) and the revisions stated in the 11/3/15 Bridge Design memorandum.

D-10.15
Wall Type 2 may be used if no traffic barrier is attached on top of the wall. Walls with traffic barriers attached on top of the wall are considered non-standard and shall be designed in accordance with the current WSDOT BDM and the revisions stated in the 11/3/15 Bridge Design memorandum.

D-10.30
Wall Type 5 may be used in all cases.

D-10.35
Wall Type 6 may be used in all cases.

D-10.40
Wall Type 7 may be used if no traffic barrier is attached on top of the wall. Walls with traffic barriers attached on top of the wall are considered non-standard and shall be designed in accordance with the current WSDOT BDM and the revisions stated in the 11/3/15 Bridge Design memorandum.

D-10.45
Wall Type 8 may be used if no traffic barrier is attached on top of the wall. Walls with traffic barriers attached on top of the wall are considered non-standard and shall be designed in accordance with the current WSDOT BDM and the revisions stated in the revisions stated in the 11/3/15 Bridge Design memorandum.

D-15.10
STD Plans D-15 series “Traffic Barrier Details for Reinforced Concrete Retaining Walls” are withdrawn. Special designs in accordance with the current WSDOT BDM are required in place of these STD Plans.

D-15.20
STD Plans D-15 series “Traffic Barrier Details for Reinforced Concrete Retaining Walls” are withdrawn. Special designs in accordance with the current WSDOT BDM are required in place of these STD Plans.

D-15.30
STD Plans D-15 series “Traffic Barrier Details for Reinforced Concrete Retaining Walls” are withdrawn. Special designs in accordance with the current WSDOT BDM are required in place of these STD Plans.

F-10.12
Section Title, was – “Depressed Curb Section” is revised to read: “Depressed Curb and Gutter Section”

F-10.40
“EXTRUDED CURB AT CUT SLOPE”, Section detail - Deleted

F-10.42
DELETE – “Extruded Curb at Cut Slope” View

G-25.10
Key Note 3, second sentence, was – “For single-post installations, divide the (#2w/diamond shape symbol) post MAX. XYZ in half.” Is revised to read: “For single-post installations, divide the two-post MAX. XYZ in half.”

G-60.10
DELETED

G-60.20
DELETED

G-60.30
DELETED

G-70.10
DELETED

G-70.20
DELETED

H-70.20
Sheet 2, Spacing Detail, Mailbox Support Type 1, reference to Standard Plan I-70.10 is revised to H-70.10

J-10.21
Note 18, was – "When service cabinet is installed within right of way fence, see Standard Plan J-10.22 for details." Is revised to read; "When service cabinet is installed within right of way fence, or the meter base is mounted on the exterior of the cabinet, see Standard Plan J-10.22 for details."

J-10.22
Key Note 1, was – "Meter base per serving utility requirements~ as a minimum, the meter base shall be safety socket box with factory-installed test bypass facility that meets the requirements of EUSERC drawing 305." Is revised to read; "Meter base per serving utility requirements~ as a minimum, the meter base shall be safety socket box with factory-installed test bypass facility that meets the requirements of EUSERC drawing 305. When the utility requires meter base to be mounted on the side or back of the service cabinet, the meter base enclosure shall be fabricated from type 304 stainless steel."
Key Note 4, "Test with (SPDT Snap Action, Positive close 15 Amp – 120/277 volt "T" rated). Is revised to read: "Test Switch (SPDT snap action, positive close 15 amp – 120/277 volt "T" rated)."
Key Note 14, was – "Hinged dead front with ¼ turn fasteners or slide latch." Is revised to read; "Hinged dead front with ¼ turn fasteners or slide latch. ~ Dead front panel bolts shall not extend into the vertical limits of the breaker array(s)."
Key Note 15, was – "Cabinet Main Bonding Jumper. Buss shall be 4 lug tinned copper. See Cabinet Main bonding Jumper detail, Standard Plan J-3b." is revised to read; "Cabinet Main Bonding Jumper Assembly ~ Buss shall be 4 lug tinned copper ~ See Standard Plan J-10.20 for Cabinet Main Bonding Jumper Assembly details."
Note 1, was – "…socket box mounting detail, see Standard Plan J-3b." is revised to read to read: "…socket box mounting detail, see Standard Plan J-10.20."
Note 6, was – "…See door hinge detail, Standard Plan J-3b." is revised to read: "…See door hinge detail, Standard Plan J-10.20."

J-20.26
Add Note 1, "1. One accessible pedestrian pushbutton station per pedestrian pushbutton post."

J-20.16
View A, callout, was – LOCK NIPPLE, is revised to read; CHASE NIPPLE

J-21.10
Sheet 1, Elevation View, Round Concrete Foundation Detail, callout – "ANCHOR BOLTS ~ ¾" (IN) x 30" (IN) FULL THREAD ~ THREE REQ'D. PER ASSEMBLY" IS REVISED TO READ: "ANCHOR BOLTS ~ ¾" (IN) x 30" (IN) FULL THREAD ~ FOUR REQ'D. PER ASSEMBLY"
Sheet 1 of 2, Elevation view (Round), add dimension depicting the distance from the top of the foundation to find 2 #4 reinforcing bar shown, to read; 3" CLR.. Delete "(TYP.)" from the 2 ½"

CLR. dimension, depicting the distance from the bottom of the foundation to find 2 # 4 reinf. Bar.
Sheet 1 of 2, Elevation view (Square), add dimension depicting the distance from the top of the foundation to find 1 #4 reinforcing bar shown, to read; 3" CLR. Delete "(TYP.)" from the 2 ½" CLR. dimension, depicting the distance from the bottom of the foundation to find 1 # 4 reinf. Bar.
Sheet 2 of 2, Elevation view (Round), add dimension depicting the distance from the top of the foundation to find 2 #4 reinforcing bar shown, to read; 3" CLR. Delete "(TYP.)" from the 2 ½" CLR. dimension, depicting the distance from the bottom of the foundation to find 2 # 4 reinf. Bar.
Sheet 2 of 2, Elevation view (Square), add dimension depicting the distance from the top of the foundation to find 1 #4 reinforcing bar shown, to read; 3" CLR. Delete "(TYP.)" from the 2 ½" CLR. dimension, depicting the distance from the bottom of the foundation to find 1 # 4 reinf. Bar.
Detail F, callout, "Heavy Hex Clamping Bolt (TYP.) ~ 3/4" (IN) Diam. Torque Clamping Bolts (see Note 3)" is revised to read; "Heavy Hex Clamping Bolt (TYP.) ~ 3/4" (IN) Diam. Torque Clamping Bolts (see Note 1)"
Detail F, callout, "3/4" (IN) x 2' – 6" Anchor Bolt (TYP.) ~ Four Required (See Note 4)" is revised to read; "3/4" (IN) x 2' – 6" Anchor Bolt (TYP.) ~ Three Required (See Note 2)"

<u>J-21.15</u>
Partial View, callout, was – LOCK NIPPLE ~ 1 ½" DIAM., is revised to read; CHASE NIPPLE ~ 1 ½" (IN) DIAM.

<u>J-21.16</u>
Detail A, callout, was – LOCKNIPPLE, is revised to read; CHASE NIPPLE

<u>J-22.15</u>
Ramp Meter Signal Standard, elevation, dimension 4' - 6" is revised to read; 6'-0"
(2x) Detail A, callout, was – LOCK NIPPLE ~ 1 ½" DIAM. is revised to read; CHASE NIPPLE ~ 1 ½" (IN) DIAM.

<u>J-28.24</u>
Case E and Case F Section View dimension callout, "3' – 0" MIN. FOR BEAM GUARDRAIL, 4' – 0" MIN. FOR CONC. BARRIER TYPE 2" is revised to read, "5' – 0" MIN. FOR BEAM GUARDRAIL, 8' – 0" MIN. FOR UNANCHORED TYPE F CONC. BARRIER, 4' – 0" MIN. FOR ANCHORED TYPE F CONC. BARRIER".

<u>J-40.10</u>
Sheet 2 of 2, Detail F, callout, "12 – 13 x 1 ½" S.S. PENTA HEAD BOLT AND 12" S. S. FLAT WASHER" is revised to read; "12 – 13 x 1 ½" S.S. PENTA HEAD BOLT AND 1/2" (IN) S. S. FLAT WASHER"

<u>J-75.20</u>
Key Notes, note 16, second bullet point, was: "1/2" (IN) x 0.45" (IN) Stainless Steel Bands", add the following to the end of the note: "Alternate: Stainless steel cable with stainless steel ends, nuts, bolts, and washers may be used in place of stainless steel bands and associated hardware."

<u>J-81.10</u>
Power Distribution Block Diagram, lower left corner, Sheet 1 of 3; Switch Pack 2; circuit 623 (T4-5) [middle ckt] is revised to read; circuit **622 (T4-5)**.

<u>K-80.10</u>
SIGN INSTALLATION (BEHIND TRAFFIC BARRIER) detail dimension callout, "3' MIN." is revised to read, "5' MIN.".

<u>K-80.30</u>
DELETED

K-80.35

Add New Note 1 – "1. The intended use of this plan is for the temporary installation of Type 2 concrete barrier (See Standard Plan C-8) on cement concrete pavement, bridge decks, or hot mix asphalt pavement, and Type F concrete barrier on cement concrete pavement or bridge decks.

Re-number all notes.

The TYPE 1 ANCHOR detail description "TEMPORARY INSTALLATION OF PRECAST CONC. BARRIER TYPE 2 (STD. PLAN C-8) AND TEMPORARY CONC. BARRIER (F-SHAPE) (STD. PLAN K-80.30) ON CEMENT CONC. PAVEMENT OR BRIDGE DECK" is revised to read, "TEMPORARY INSTALLATION OF PRECAST CONC. BARRIER TYPE F (STD. PLAN C-60.10) OR PRECAST CONC. BARRIER TYPE 2 (STD. PLAN C-8) ON CEMENT CONC. PAVEMENT OR BRIDGE DECK."

The TYPE 3 ANCHOR detail description "TEMPORARY INSTALLATION OF PRECAST CONC. BARRIER TYPE 2 (STD. PLAN C-8) AND TEMPORARY CONC. BARRIER (F-SHAPE) (STD. PLAN K-80.30) ON HOT MIX ASPHALT PAVEMENT" is revised to read, "TEMPORARY INSTALLATION OF PRECAST CONC. BARRIER TYPE 2 (STD. PLAN C-8) ON HOT MIX ASPHALT PAVEMENT."

K-80.37

Revise Note 1 to read:"1. The intended use of this plan is for the temporary installation of Type F NARROW BASE concrete barrier (See Standard Plan C-60.10) or Type 4 (Type 2 Narrow Base – See Std. Plan C-8a) Concrete Barrier on cement concrete pavement, bridge decks."

Replace all callouts stating "NARROW BASE, ALTERNATIVE TEMPORARY CONCRETE BARRIER SEGMENT" with "Type F NARROW BASE or Type 4 (Type 2 Narrow Base) concrete barrier segment."

M-3.50

Double-Left Turn Channelization (with Right Turn Pocket) view, dimension, upper left corner, "taper" dimension; callout – was "40' if Posted Speed is 40 MPH or less 100' if Posted Speed is more than 40 MPH" is revised to read; "See Contract"

M-5.10

Right-Turn Channelization view, dimension, upper right corner, "taper" dimension; callout – was "50' MIN." is revised to read; "See Contract"

M-12.10

Add Note 5. "Check with Region Traffic Office for RPM and Guidepost placements."

M-24.50

DELETED

The following are the Standard Plan numbers applicable at the time this project was advertised. The date shown with each plan number is the publication approval date shown in the lower right-hand corner of that plan. Standard Plans showing different dates shall not be used in this contract.

A-10.10-00.....8/7/07	A-40.00-00.....8/11/09	A-50.30-00……..11/17/08
A-10.20-00.....10/5/07	A-40.10-04.....7/31/19	A-50.40-00……..11/17/08
A-10.30-00.....10/5/07	A-40.15-00.....8/11/09	A-60.10-03.....12/23/14
A-20.10-00.....8/31/07	A-40.20-04.....1/18/17	A-60.20-03.....12/23/14
A-30.10-00.....11/8/07	A-40.50-02.....12/23/14	A-60.30-01.....6/28/18
A-30.30-01.....6/16/11	A-50.10-00……..11/17/08	A-60.40-00.....8/31/07
A-30.35-00.....10/12/07	A-50.20-01…….9/22/09	

B-5.20-02.....1/26/17
B-5.40-02.....1/26/17
B-5.60-02.....1/26/17
B-10.20-02.....3/2/18
B-10.40-01.....1/26/17
B-10.70-00……1/26/17
B-15.20-01.....2/7/12
B-15.40-01.....2/7/12
B-15.60-02.....1/26/17
B-20.20-02.....3/16/12
B-20.40-04.....2/27/18
B-20.60-03.....3/15/12
B-25.20-02.....2/27/18
B-25.60-02.....2/27/18
B-30.10-03.....2/27/18
B-30.15-00……..2/27/18
B-30.20-04.....2/27/18
B-30.30-03.....2/27/18
B-30.40-03.....2/27/18
B-30.50-03.....2/27/18
B-30.70-04.....2/27/18
B-30.80-01.....2/27/18
B-30.90-02.....1/26/17
B-35.20-00.....6/8/06
B-35.40-00.....6/8/06
B-40.20-00.....6/1/06
B-40.40-02.....1/26/17
B-45.20-01.....7/11/17
B-45.40-01.....7/21/17
B-50.20-00.....6/1/06
B-55.20-02.....2/27/18
B-60.20-01.....6/28/18
B-60.40-01.....2/27/18
B-65.20-01.....4/26/12
B-65.40-00.....6/1/06
B-70.20-00.....6/1/06
B-70.60-01.....1/26/17
B-75.20-02.....2/27/18
B-75.50-01.....6/10/08
B-75.60-00.....6/8/06
B-80.20-00.....6/8/06
B-80.40-00.....6/1/06
B-85.10-01.....6/10/08
B-85.20-00.....6/1/06
B-85.30-00.....6/1/06
B-85.40-00.....6/8/06
B-85.50-01.....6/10/08
B-90.10-00…....6/8/06
B-90.20-00.....6/8/06
B-90.30-00.....6/8/06
B-90.40-01.....1/26/17
B-90.50-00.....6/8/06
B-95.20-01.....2/3/09
B-95.40-01.....6/28/18

1

C-1.....6/28/18
C-1a.....7/14/15
C-1b.....8/12/19
C-1d.....10/31/03
C-2c.....8/12/19
C-4f.....8/12/19
C-6a.....10/14/09
C-7.....6/16/11
C-7a.....6/16/11
C-8.....2/10/09
C-8a.....7/25/97
C-8b.....2/29/16
C-8e.....2/21/07
C-8f.....6/30/04
C-16a.....7/21/17
C-20.10-05.....8/12/19
C-20.11-00……..7/21/17
C-20.14-04.....8/12/19
C-20.15-02.....6/11/14
C-20.18-03.....8/12/19
C-20.19-03.....8/12/19
C-20.40-07.....8/12/19
C-20.41-02.....8/12/19
C-20.42-05.....7/14/15
C-20.45.02.....8/12/19
C-22.16-06.....7/21/17
C-22.40-07.....8/12/19
C-22.45-04.....8/12/19
C-23.60-04.....7/21/17
C.24.10-02.....8/12/19
C-25.20-06.....7/14/15
C-25.22-05.....7/14/15
C-25.26-04.....8/12/19
C-25.30-00……6/28/18
C-25.80-05.....8/12/19
C-40.16-02.....7/2/12
C-40.18-03.....7/21/17
C-60.10-00……8/22/19
C-70.10-01.....6/17/14
C-75.10-01.....6/11/14
C-75.20-01.....6/11/14
C-75.30-01.....6/11/14
C-80.10-01.....6/11/14
C-80.20-01.....6/11/14
C-80.30-01.....6/11/14
C-80.40-01.....6/11/14
C-80.50-00.....4/8/12
C-85.10-00.....4/8/12
C-85.11-00.....4/8/12
C-85.14-01.....6/11/14
C-85.15-01.....6/30/14
C-85.16-01.....6/17/14
C-85-18-01.....6/11/14
C-85.20-01.....6/11/14

2

D-2.04-00.....11/10/05
D-2.06-01.....1/6/09
D-2.08-00.....11/10/05
D-2.14-00.....11/10/05
D-2.16-00.....11/10/05
D-2.18-00.....11/10/05
D-2.20-00.....11/10/05
D-2.32-00.....11/10/05
D-2.34-01.....1/6/09
D-2.36-03.....6/11/14
D-2.42-00.....11/10/05
D-2.44-00.....11/10/05
D-2.60-00.....11/10/05
D-2.62-00.....11/10/05
D-2.46-01.....6/11/14
D-2.48-00.....11/10/05
D-2.64-01.....1/6/09
D-2.66-00.....11/10/05
D-2.68-00.....11/10/05
D-2.80-00.....11/10/05
D-2.82-00.....11/10/05
D-2.84-00.....11/10/05
D-2.86-00.....11/10/05
D-2.88-00.....11/10/05
D-2.92-00.....11/10/05
D-3.09-00.....5/17/12
D-3.10-01……5/29/13
D-3.11-03……6/11/14
D-3.15-02……6/10/13
D-3.16-02……5/29/13
D-3.17-02……5/9/16
D-4.....12/11/98
D-6.....6/19/98
D-10.10-01.....12/2/08
D-10.15-01.....12/2/08
D-10.20-01.....8/7/19
D-10.25-01.....8/7/19
D-10.30-00.....7/8/08
D-10.35-00.....7/8/08
D-10.40-01.....12/2/08
D-10.45-01.....12/2/08

3

E-1.....2/21/07
E-2.....5/29/98
E-4.....8/27/03
E-4a.....8/27/03

4

F-10.12-03.....6/11/14
F-10.62-02.....4/22/14
F-40.15-03.....6/29/16

F-10.16-00.....12/20/06
F-10.18-01.....7/11/17
F-10.40-03.....6/29/16
F-10.42-00.....1/23/07
F-10.64-03.....4/22/14
F-30.10-03.....6/11/14
F-40.12-03.....6/29/16
F-40.14-03.....6/29/16
F-40.16-03.....6/29/16
F-45.10-02.....7/15/16
F-80.10-04.....7/15/16

1

G-10.10-00.....9/20/07
G-20.10-02.....6/23/15
G-22.10-04.....6/28/18
G-24.10-00.....11/8/07
G-24.20-01.....2/7/12
G-24.30-02.....6/28/18
G-24.40-07.....6/28/18
G-24.50-05.....8/7/19
G-24.60-05.....6/28/18
G-25.10-04.....6/10/13
G-26.10-00……7/31/19
G-30.10-04.....6/23/15
G-50.10-03.....6/28/18
G-90.10-03……7/11/17
G-90.11-00……4/28/16
G-90.20-05……7/11/17
G-90.30-04……7/11/17
G-90.40-02……4/28/16
G-95.10-02.....6/28/18
G-95.20-03.....6/28/18
G-95.30-03.....6/28/18

2

H-10.10-00.....7/3/08
H-10.15-00.....7/3/08
H-30.10-00.....10/12/07
H-32.10-00.....9/20/07
H-60.10-01.....7/3/08
H-60.20-01.....7/3/08
H-70.10-01.....2/7/12
H-70.20-01.....2/16/12
H-70.30-02.....2/7/12

3

I-10.10-01.....8/11/09
I-30.10-02.....3/22/13
I-30.15-02.....3/22/13
I-30.16-01.....7/11/19
I-30.17-01.....6/12/19
I-30.20-00.....9/20/07
I-30.30-02.....6/12/19
I-30.40-02.....6/12/19
I-30.60-02.....6/12/19
I-40.10-00.....9/20/07
I-40.20-00.....9/20/07
I-50.20-01.....6/10/13
I-60.10-01.....6/10/13
I-60.20-01.....6/10/13
I-80.10-02.....7/15/16

4

J-10.....7/18/97
J-10.10-03……6/3/15
J-10.15-01.....6/11/14
J-10.16-00……6/3/15
J-10.17-00……6/3/15
J-10.18-00……6/3/15
J-10.20-02……7/31/19
J-10.21-00……6/3/15
J-10.22-00.....5/29/13
J-10.25-00……7/11/17
J-12.15-00……6/28/18
J-12.16-00……6/28/18
J-15.10-01.....6/11/14
J-15.15-02……7/10/15
J-20.10-04.....7/31/19
J-20.11-03.....7/31/19
J-20.15-03.....6/30/14
J-20.16-02.....6/30/14
J-20.20-02.....5/20/13
J-20.26-01.....7/12/12
J-21.10-04.....6/30/14
J-21.15-01.....6/10/13
J-21.16-01.....6/10/13
J-21.17-01.....6/10/13
J-21.20-01.....6/10/13
J-22.15-02.....7/10/15
J-22.16-03.....7/10/15
J-26.10-03.....7/21/16
J-26.15-01.....5/17/12
J-26.20-01.....6/28/18
J-27.10-01.....7/21/16
J-27.15-00.....3/15/12
J-28.40-02.....6/11/14
J-28.42-01.....6/11/14
J-28.43-01.....6/28/18
J-28.45-03.....7/21/16
J-28.50-03.....7/21/16
J-28.60-02.....7/21/16
J-28.70-03.....7/21/17
J-29.10-01.....7/21/16
J-29.15-01.....7/21/16
J-29.16-02.....7/21/16
J-30.10-00.....6/18/15
J-40.05-00……7/21/16
J-40.10-04.....4/28/16
J-40.20-03.....4/28/16
J-40.30-04……4/28/16
J-40.35-01……5/29/13
J-40.36-02……7/21/17
J-40.37-02……7/21/17
J-40.38-01.....5/20/13
J-40.39-00……5/20/13
J-40.40-02……7/31/19
J-45.36-00……7/21/17
J-50.05-00……7/21/17
J-50.10-01…….7/31/19
J-50.11-02…….7/31/19
J-50.12-02…….8/7/19
J-50.13-00…….8/22/19
J-50.15-01…….7/21/17
J-50.16-01…….3/22/13
J-50.18-00…….8/7/19
J-50.19-00…….8/7/19
J-50.20-00…….6/3/11
J-60.13-00…….6/16/10
J-60.14-01……7/31/19
J-75.10-02……7/10/15
J-75.20-01……7/10/15
J-75.30-02…….7/10/15
J-75.40-02……6/1/16
J-75.41-01……6/29/16
J-75.45-02……6/1/16
J-80.10-00……6/28/18
J-80.15-00……6/28/18
J-81.10-00……6/28/18
J-86.10-00……6/28/18
J-90.10-03…….6/28/18
J-90.20-03…….6/28/18
J-90.21-02……6/28/18
J-90.50-00……6/28/18

J-28.10-02.....8/7/19
J-28.22-00.....8/07/07
J-28.24-01.....6/3/15
J-28.26-01.....12/02/08
J-28.30-03.....6/11/14
J-50.25-00…….6/3/11
J-50.30-00…….6/3/11
J-60.05-01…….7/21/16
J-60.11-00…....5/20/13
J-60.12-00…....5/20/13

K-70.20-01.....6/1/16
K-80.10-01.....6/1/16
K-80.20-00.....12/20/06
K-80.35-00.....2/21/07
K-80.37-00.....2/21/07

L-10.10-02.....6/21/12
L-20.10-03.....7/14/15
L-30.10-02.....6/11/14
L-40.10-02.....6/21/12
L-40.15-01.....6/16/11
L-40.20-02.....6/21/12
L-70.10-01.....5/21/08
L-70.20-01.....5/21/08

M-1.20-03.....6/24/14
M-1.40-02.....6/3/11
M-1.60-02.....6/3/11
M-1.80-03.....6/3/11
M-2.20-03.....7/10/15
M-2.21-00……7/10/15
M-3.10-03.....6/3/11
M-3.20-02.....6/3/11
M-3.30-03.....6/3/11
M-3.40-03.....6/3/11
M-3.50-02.....6/3/11
M-5.10-02.....6/3/11
M-7.50-01.....1/30/07
M-9.50-02.....6/24/14
M-9.60-00……..2/10/09
M-11.10-03.....8/7/19
M-12.10-01……6/28/18
M-15.10-01.....2/6/07
M-17.10-02.....7/3/08
M-20.10-02.....6/3/11
M-20.20-02.....4/20/15
M-20.30-04.....2/29/16
M-20.40-03.....6/24/14
M-20.50-02.....6/3/11
M-24.20-02.....4/20/15
M-24.40-02.....4/20/15
M-24.60-04.....6/24/14
M-24.65-00……7/11/17
M-24.66-00……7/11/17
M-40.10-03.....6/24/14
M-40.20-00...10/12/07
M-40.30-01.....7/11/17
M-40.40-00.....9/20/07
M-40.50-00.....9/20/07
M-40.60-00.....9/20/07
M-60.10-01.....6/3/11
M-60.20-02.....6/27/11
M-65.10-02.....5/11/11
M-80.10-01.....6/3/11
M-80.20-00.....6/10/08
M-80.30-00.....6/10/08

Section 01 12 00
Construction Sequencing

GENERAL

The Contractor shall follow the following schedule and procedures when completing Work at the Wastewater Treatment Plant.

A. Contractor shall provide bypass facilities, such as temporary piping or pumping, if required for performance of the Work to maintain plant operation at all times, whether bypass facilities are specifically called for or not in the Contract Documents. The cost of such facilities shall be incidental to the Work.

B. Bypass facilities may be pumped or may be through gravity conveyance as approved by the Engineer and Owner and shall be suitable for the Work to be performed.

C. Contractor shall be responsible for the continuous operation of all temporary bypass facilities installed for performance of the Work, including any fuel required for portable engines and remote monitoring of powered equipment failures. Contractor shall be responsible for all clean-up operations should the temporary facilities fail during operation, and shall notify the Engineer and Owner immediately of such an occurrence.

D. Temporary bypass facilities shall be sized based on the peak flow design criteria for the unit process to be bypassed, unless otherwise approved by the Engineer or specified herein.

E. For installation of piping connected to the ponds at the treatment plant, Contractor shall drain the ponds to the existing drip field prior to performing the Work. Contractor shall complete the draining of the lagoons, installation and commissioning of the new pond drain piping and the Plant Drain Pump Station, prior to removing any treatment plant tanks from service, so that the ponds can be used for storage if needed. The maximum capacity of Pond #1 is 760,000 gallons and the maximum capacity of Pond #2 570,000 gallons.

F. For removing Anoxic Basin #1 from service, Contractor shall install temporary pumping facilities to pump raw sewage from the equalization basin to Anoxic Basin #2, bypassing Anoxic Basin #1. Raw sewage pumping facilities shall have a minimum capacity of the influent design peak hourly flow of 260,000 GPD (180 GPM). Recycled activated sludge piping from the membrane bioreactor (MBR) shall be rerouted so that the activated sludge is returned to Anoxic Basin #2 instead of Anoxic Basin #1.

G. For removing Anoxic Basin #2 from service, Contractor shall install temporary pumping facilities to pump activated sludge from Anoxic Basin #1 to the MBR basin, bypassing Anoxic Basin #2. Activated sludge pumping facilities shall have a minimum capacity of the peak influent raw sewage flow (260,000 GPD/180 GPM) plus the maximum activated sludge recycle flow (500 GPM), estimated to be 680 GPM.

H. The Contractor is responsible for all conveyance and removal of the contents of the treatment plant tanks prior to performing any work on the tanks. If the Contractor chooses to use the new Plant Drain Pump Station to drain the treatment plant tanks, the Contractor must install the tank drain piping and Plant Drain Pump Station as shown on

the Drawings. Once the drain piping and pump station are installed, commissioned, and the work is accepted by the Engineer and Owner, the tanks can be drained in sequence to the Plant Drain Pump Station and the contents pumped to either the ponds for storage or to the treatment plant inlet forcemain. If pumping to the lagoons, the valve between the lagoon inlet piping and the Plant Drain Pump Station discharge pipe must be open, and the valves between the Plant Drain Pump Station discharge pipe and the treatment plant inlet forcemain must be closed.

I. If pumping to the treatment plant inlet forcemain, the valves between the lagoon inlet piping and the Plant Drain Pump Station discharge pipe must be closed, and the valves between the Plant Drain Pump Station discharge pipe and the treatment plant inlet forcemain must be open. When pumping to the treatment plant inlet forcemain, the combined flow of the inlet raw sewage plus the flow from the Plant Drain Pump Station should be maintained less than or equal to 104 GPM (150,000 GPD). This requires that only one Plant Drain Pump be operated at a time and that the flow be routed to the forcemain only during periods of low inlet flow.

SECTION 02 41 19
SELECTIVE DEMOLITION

PART 1 GENERAL

1.1 DESCRIPTION OF WORK

This work includes the removal of electrical equipment, piping membrane filter equipment and portions of the concrete membrane tank. All abandon piping conduits and voids resulting from the demolition shall be plugged, capped or filled with grout. All equipment and materials removed as part of the demolition shall become the property of the Contractor and shall be disposed of in accordance with State and Federal requirements.

Other work includes decommissioning the three existing surge tanks located at the WWTF with approximate capacities of 5,500 gallons, 9,500 gallons and 12,000 gallons.

PART 3 EXECUTION

3.1 Equipment Removal

Contractor shall remove existing pump wiring, conduits, control panels, metering and monitoring equipment and miscellaneous piping and equipment that is associated with the MBR treatment system.

Contractor shall remove all treatment and miscellaneous equipment and piping from the MBR Treatment tank and the 12,000 gallon surge tank.

All electrical panels, transformers wiring and appurtenances associated with the existing septic tank effluent pumping system, building lighting and electrical shall be protected during demolition.

All exposed ends of piping and electrical conduit shall be plugged or capped. Any void in concrete surfaces caused by demolition shall be filled with grout.

3.2 Concrete Tank Demolition/Removal

Contractor shall remove and dispose of the concrete lid from the existing MBR treatment tank. The concrete tank walls shall be removed to a depth of not less than 3” below the bottom of the floor slab. Concrete removed from the walls can be used to fill the remaining tank.

Contractor shall crush top of each concrete surge tank at the WWTF after the Owner has removed all of the liquid.

3.3 Tank Filling

After the tank lid and the portion of the concrete tank walls at the MBR facility have been removed and disposed of, Contractor shall fill the remaining tank to a level 4” below the top of the floor slap. Tank fill material shall be Crushed Surfacing Top Course complying with Section

9-03.9(3). Material shall be brought to optimum moisture and compacted with hand tampers to prevent settlement of floor repairs.

After the top of the surge tanks have been crushed in, Contractor shall fill the remaining tank to the ground surface with Crushed Surfacing Top Course complying with Section 9-03.9(3). Material shall be brought to optimum moisture and compacted.

3.2.1 Concrete Floor Repair

After the existing tank void at the MBR facility has been filled and compacted the Contractor shall repair the floor with a 4” deep concrete patch. Expansion joint material shall be installed along all four sides of the repair and #4 rebar reinforcement shall be installed on 12 inch centers both ways at the slabs mid depth. Slab finish shall be a steel trowel finish. Concrete shall meet the requirements of Section 6-02.3(2) Commercial Concrete. Tooled contraction joints shall be installed on a 10’ minimum spacing or an equal square pattern

PART 4 MEASUREMENT AND PAYMENT

4.1 METHODS OF MEASUREMENT

No separate measurement will be made for the work.

4.2 PAYMENT

Payment for all work, materials, labor, equipment, tools, removal and disposal of materials, filling and compacting the tank and repairing the floor shall be included in the Bid Item; “Decommission Wellness Center MBR”.

Payment for all work, materials, labor, equipment, tools, removal and disposal of materials, filling and compacting the surge tanks shall be included in the Lump Sum Bid Item; “WWTF Improvements”.

SECTION 09 96 00
HIGH PERFORMANCE COATINGS

PART 1 GENERAL

1.1 DESCRIPTION OF WORK

A. Work covered by this section includes all labor, materials, and equipment required for surface preparation and application of protective coatings as specified herein for both concrete and steel structures. Ductile iron piping used within the package duplex pump station wetwells and valve vault will also be included in this section.

1.2 RELATED WORK

A. Division 26 - Electrical

1.3 REFERENCE STANDARDS

A. SSPC: The Society for Protective Coatings:

1. SSPC - Painting Manual, Volume 2: Systems and Specifications.

2. SSPC-SP 10/NACE No. 2 - Near-White Metal Blast Cleaning.

3. SSPC-SP13/NACE No. 6 – Surface Preparation of Concrete

1.4 SUBMITTALS

A. Technical Data Sheets: For each paint system used herein, submit a technical data sheet from each paint manufacturer and paint colors available for each product used in the paint system. The technical data sheet shall at minimum provide the paint material name, manufacturer name, product name and number, material specification, minimum coats of coverage and thickness.

B. System Application Process (for each coating system): Surface preparation, primer, intermediate coat, finish coat for each paint system.

C. Field Coating Inspection Report: Submit results of field tests and inspections on Form 09 96 00-1 (Paint Inspection Form).

1.5 PAYMENT

A. The cost for the work and materials specified herein for coating the Anoxic Tanks and pipe within the Plant Drain Package Pump Station shall be included in the lump sum cost of the Wastewater Treatment Facility Improvements.

B. The cost for the work and materials specified herein for coating Pump Station #2 shall be included in the lump sum cost for Pump Station #2 Rehabilitation with Refurbished Interior Controls & Miscellaneous.

C. The cost for the work and materials specified herein for coating all pipe within the Welllness Center Package Pump Station shall be included in the lump sum cost for Wellness Center Pump Station.

1.6 WARRANTY

A. The installation Contractor shall warrant the materials and workmanship to be free of defects for a period of two (2) years from completion and acceptance of the coating system by the Engineer.

PART 2 PRODUCTS

2.1 COATING SYSTEM

A. The coating system to be utilized for concrete wastewater structures shall be a liner system by; Tnemec Company, Inc., Blue Seal, Inc. or approved equal.

Tnemec system multi-coat system includes:
Series218 MortarClad (if necessary)
Series 436 Perma-Shield FR (50 mils min. DFT)
Series 435 Perma-Glaze (15 mils min. DFT)

Blue Seal system includes: Blue Seal – 15 mils DFT per coat (4 coats minimum)

B. The coating system to be utilized for steel wastewater structures and the interior piping of package duplex pump stations shall be a liner system by; Tnemec Company, Inc., Blue Seal, Inc. or approved equal.

Tnemec multi-coat system includes:
First Coat: Tnemec Series N69 Epoxoline at 4.0 to 6.0 mils DFT
Second Coat: Tnemec Series 435 at 15 to 20 mils DFT
Finish Coat: Tnemec Series 435 at 15 to 20 mils DFT

Blue Seal system includes: Blue Seal – 15 mils DFT per coat (4 coats minimum)

PART 3 EXECUTION

3.1 DELIVERY AND STORAGE

A. Deliver all materials to the job site in original, new, and unopened packages and containers bearing manufacturer's name and label.

B. Store materials in ventilated area and otherwise according to manufacturer instructions. Store materials not in actual use in tightly covered containers. Maintain containers used in storage, mixing, and application of paint in a clean condition, free of foreign materials and residue.

3.2 AMBIENT CONDITIONS

A. Contractor shall provide facilities as required for ambient condition control facilities for product storage and installation.

B. Minimum Conditions: Do not install materials when temperature is below 55 degrees F (13 degrees C) or above 90 degrees F (32 degrees C).

C. Subsequent Conditions: Maintain above temperature range, 24 hours before, during, and 72 hours after installation of coating.

D. Provide adequate lighting level at substrate surface.

E. Restrict traffic from area where coating is being applied or is curing.

F. Do not apply paint when conditions are such that dust, dirt, or other deleterious substances which may impair the quality of coats or the finish are present or will be present before the coating is fully dry.

G. Comply with manufacturer's recommended limitations for ambient and surface temperature and humidity. No painting is to be done when the relative humidity exceeds 85 percent.

H. Comply with manufacturer's recommendations for minimum and maximum times between applications.

3.3 SURFACE PREPARATION

A. Perform preparation and cleaning procedures in strict accordance with the paint manufacturer's instructions and as specified herein, for each substrate condition.

B. Examine the areas and conditions under which painting work is to be applied. Notify the Engineer in writing of conditions detrimental to the proper and timely completion of the work. Do not proceed with the work until unsatisfactory conditions have been corrected. Test previously painted or primed surfaces for compatibility with painting systems.

C. Remove, mask, or otherwise protect surfaces or hardware not specified or intended to be painted or blasted, or surfaces which have received the finish coat.

D. Clean surfaces to be painted before applying coating or surface treatments. Remove oil and grease prior to mechanical cleaning. Program the cleaning and painting so that contaminants from the cleaning process will not fall onto wet, newly coated surfaces.

E. Metal Surface Preparation: All workmanship for metal surface preparation shall be in conformance with the current Steel Structures Painting Council (SSPC). All oil, grease, welding fluxes, and other surface contaminants shall be removed prior to blast cleaning. All surfaces shall be cleaned of all dust and residual particles of the blast cleaning operations prior to painting. Surfaces that have started to rust before they are painted shall be re-blasted.

F. Concrete and Masonry Preparation: Prepare surfaces of concrete and masonry to be painted by removing all efflorescence, chalk, dust, dirt, grease, oils, loose concrete, etc. according to SSPC-SP13/NACE No. 6. Determine the alkalinity and moisture content of the surfaces to be painted by performing appropriate tests. Do not paint over surfaces where the alkalinity or moisture content exceeds that permitted in the manufacturer's printed directions.

G. Thoroughly mask and protect from dust all mechanical and electrical equipment in vicinity of sandblasting that has not been removed. Replace any equipment damaged by sandblasting.

3.4 APPLICATION

A. Apply paint in strict accordance with the manufacturer's instructions. Use applicators and techniques best suited for the type of material being applied. Do not exceed manufacturer's recommended coverage per gallon.

B. Apply additional coats when undercoats, stains, or other conditions show through the finish coating, until the paint film is of uniform finish color and appearance.

3.5 INSPECTION

A. Each coat of material shall be inspected and approved by the Owner’s inspector before applying succeeding coats; otherwise, no credit for coat applied will be given.

B. The paint system will be visually inspected by the Owner's inspector. Show-through of substrate or previous coating will be grounds for rejection of coating.

3.6 TESTING

A. Contractor is required to measure the Dry Film Thickness (DFT) in mils on all coated ferrous surfaces with a calibrated magnetic non-destructive testing apparatus in the presence of the Owner's inspector. The results of the testing shall be submitted to the Engineer for approval.

B. Minimum Number of Testing Locations: At minimum, each floor and wall surface shall be tested at 10-foot horizontal and vertical increments.

C. Form 09 91 00-1 (Paint Inspection Form) shall be used to record the results of quality control inspections and tests. The completed reports shall be submitted to the Engineer before work resumes the following day. The form shall record the quality of surface preparation and measurements of surface profile, temperature, humidity, dew point and dry film thickness. One or more photos of the surface preparation shall be taken with a time stamp indicating the date and time taken.

D. Coverage rates for concrete and masonry surfaces will be determined by a count of empty containers. Remove from the job site empty containers after counting by the Owner's inspector.

3.7 CLEANUP

A. During the progress of the work, remove from the project daily all discarded coating materials, rubbish, cans and rags.

B. Upon completion of painting work, clean all spattered surfaces. Clean by proper methods of washing and scraping, using care not to scratch or otherwise damage finished surfaces. Provide "Wet Paint" signs as required to protect newly-coated finishes. Remove temporary protection wrappings.

C. Correct any damages by cleaning, repairing, or replacing and painting as directed by the Engineer.

D. Where any coated surface exhibits rust through its finished coat, all layers of primer and coating shall be removed down to the bare metal. The metal surface shall be prepared again to receive a completely new coating system and shall be recoated. The new system shall be the same as the one removed or as selected by the Engineer.

FORM 09 96 00-1 COATING INSPECTION REPORT

Paint Inspection:

Daily Coating Inspection Report

Project/Client:	Date: / / M T W Th F S Su	Pg. Of
Location:	Project #:	COPY To: ☐ QC Mgr ☐ Owner ☐ Contr ☐ _____
Description:	Inspector:	Attachments: ☐ DFT Sheet ☐ NCR/CAR ☐ _____
Requirements:		
Contractor:	Spec #	Revision #

Description of Areas & Work Performed

Hold Point Inspections Performed

☐	1	Pre Surface Pep/Condition & Cleanliness
☐	2	Surface Preparation Monitoring
☐	3	Post Surface Preparation/Cleanliness & Profile
☐	4	Pre Application Prep/Surface Cleanliness
☐	5	Application Monitoring/Wet Film Thickness (WFT)
☐	6	Post Application/Application Defects
☐	7	Post Cure/Dry Film Thickness (DFT)
☐	8	Nonconformance/Corrective Actions Follow-up
☐	9	Final Inspection

Approved By: _____

Surface Conditions

☐ New ☐ Maint ☐ Primer/Paint ☐ Age/Dry/Cure_____
☐ Steel ☐ Galvanize ☐ Concrete ☐ Other_____
☐ Hazard _____ ☐ Sample Report # _____
☐ Degree of contamination: _____
Test: ☐ Cl_____ µg/cm² / ppm ☐ Fe _____ppm ☐ pH _____
☐ Degree of Corrosion: _____
☐ Scale ☐ Pitting/Holes ☐ Crevices ☐ Sharp Edges
☐ Weld_____ ☐ Moisture ☐ Oils ☐ Other_____
☐ Painted Surface Condition: _____
Dry to: ☐ Touch ☐ Handle ☐ Recoat
☐ Dry/Over Spray ☐ Runs/Sags ☐ Pinholes ☐ Holidays
☐ Abrasion ☐ Fall Out ☐ Other _____

Ambient Conditions

Time (Indicate AM or PM)	:	:	:	:
Dry Bulb Temp° (C/F)	°	°	°	°
Wet Bulb Temp° (C/F)	°	°	°	°
% Relative Humidity	%	%	%	%
Surface Temp° (C/F) Min/Max	/ °	/ °	/ °	/ °
Dew Point Temp° (C/F)	°	°	°	°
Wind Direction/Speed				
Weather Conditions:				

Surface Preparation

Start Time: Finish Time: Est Sq/ft:
☐ Solvent Clean ☐ Hand Tool ☐ Power Tool
☐ HP Wash PSI_____ ☐ Other _____
☐ Abrasive Blast ☐ Abrasive Type _____ ☐ Sample
☐ Blast Hose Size _____ ☐ Nozzle Size / PSI _____
☐ Air Supply CFM _____ ☐ Air Supply Cleanliness
☐ Water/Oil Trap Check ☐ Equipment Condition Check

Application

Start Time : Finish Time : Est. Sq/ft.
☐ Primer ☐ Intermediate ☐ Topcoat ☐ Touch-up

Generic Type:	Qty Mixed:
Manuf.:	Mix Ratio:
Prod Name:	Mix Method:
Prod #:	Strain/Screen:
Color:	Material Temp: °F
Kit Sz/Cond.:	Sweat-in Time: Min/Hrs
Shelf Life:	Pot Life: Min/Hrs
Batch #'s	Reducer #:
(A)	Qty Added: Pt/Qt/Gal
(B)	% by Vol: %
(C)	Specified WFT Avg: Mils
Reducer:	Achieved WFT Avg: Mils

☐ Airless/Conv. Spray ☐ Brush ☐ Roller ☐ Other _____

Pump Pot	Hose Dia.	Air Check
Ratio/Size	Hose Lng.	SEP/Trap
GPM/CFM	Spray Gun	Filter
PSI	Tip Sz.	Agitator

Surface Cleanliness & Profile Measurement

☐ Job Specification ☐ SSPC/NACE - SP- _____
☐ SSPC/NACE Spec / Visual Stds ☐ _____
Profile Check: _____ ☐ Disc ☐ Tape ☐ Gauge
☐ Specified_____mils avg. / Achieved _____mils
☐ Surface effect on DFT Gauge/BMR _____mils

Dry Film Thickness

Gage Type / Model	Gage Serial #	Gage Calib. Verified	Spec Avg. DFT	Total Avg DFT	DFT Last Coat	DFT This Coat

Inspector's Signature Date

SSPC the society for protective coatings

*** END OF SECTION ***

SECTION 26 00 00
ELECTRICAL GENERAL PROVISIONS

PART 1 GENERAL

1.1 SECTION INCLUDES

A. Contract requirements

B. Codes, permits and fees

C. Quality assurance and standards

D. Site visit and familiarization

E. Submittals

F. Coordination of electrical work

G. Material and workmanship

H. Space requirements

I. Safety regulations

J. Delivery, storage and handling of materials

1.2 RELATED SECTIONS

A. Related Sections include but are not necessarily limited to:
   1. Division 0 - Bidding Requirements, Contract Forms, and Conditions of the Contract.
   2. Division 1 - General Requirements.

1.3 STANDARDS AND REFERENCES

A. Refer to Division 1 for general administrative/procedural requirements related to compliance with applicable standards.

B. This Work and all materials shall meet the standards set forth in the applicable portions of the following recognized standards:
   1. ANSI – American National Standards Institute.
   2. ASHRAE – American Society of Heating Refrigerating & Air-Conditioning Engineers.
   3. ASME – American Society of Mechanical Engineers.
   4. ASPE – American Society of Plumbing Engineers.
   5. ASTM – American Society for Testing and Materials.
   6. CBM – Certified Ballast Manufacturers.
   7. ETL – Electrical Testing Laboratory.
   8. FM – Factory Mutual Engineering Corporation.
   9. IEEE – Institute of Electrical and Electronics Engineers.
   10. IES – Illuminating Engineering Society of North America.
   11. NEC – National Electric Code (by NFPA).
   12. NEMA – National Electrical Manufacturers Association.
   13. NFPA – National Fire Protection Association.
   14. UL – Underwriters' Laboratories Inc.

1.4 SUBMITTALS

A. General: Submittals required for this project shall include, but are not be limited to:
   1. Shop Drawings and Product Brochure Submittals.
   2. Record (as-installed) Drawings.
   3. Certifications and Test Reports.
   4. Operating and Maintenance Manuals.
   5. Warranties (Guarantees).
   6. Refer to Division 1 for additional submittal requirements.

B. Shop Drawings and Product Brochure Submittals:
   1. The terms “Submittal” and “Shop Drawing” in this Specification are defined as either product literature, samples of equipment, or actual Shop Drawings.
   2. The Contractor shall submit a minimum of six (6) complete bound sets of Shop Drawings and complete data covering each item or equipment or material. The Owner and Engineer will each retain one (1) copy of all Shop Drawing submittals for their files. Where full size Drawings are involved, submit two (2) prints and one (1) reproducible in lieu of six (6) sets.
   3. Submittals shall be provided with a cover sheet with the names and addresses of the Project, Engineer, General Contractor, and the Subcontractor making the submittal. The cover sheet shall also contain the Specification section number applicable to the item or items submitted, the item nomenclature and description and a submittal number. Electrical submittals shall be numbered sequentially by Specification section with a sequence suffix (e.g. 26 05 19-1, 26 06 33-2, etc.). Re-submittals shall be numbered with the original submittal number plus an "R" in the sequence suffix (e.g. the re-submittals of submittal 26 05 19-1 would be 26 05 19-1RI, 26 05 19-1R2).
   4. Submittals shall be provided with an index page with a listing of all data included in the submittal.
   5. Submittals shall be provided with a list of variations, including unfurnished or additional items or features between the submitted equipment and the specified equipment. If there are no variations, then this page shall state "No Variations". Where variations affect the work of other contractors, then the contractor shall certify on this page that these variations have been fully coordinated with the affected contractors and that the submitting contractor shall pay all additional costs to the affected contractors associated with the variations.
   6. Submittals shall provide equipment information including manufacturer's name and designation, size, performance and capacity data. All applicable listings, labels, approvals and standards shall be clearly indicated.
   7. Submittals shall provide dimensional data and actual sketches as applicable to show that the submitted equipment will fit the space available with all required Code and maintenance clearances.
   8. Submittals shall include an identification of each item of material or equipment matching that indicated on the Drawings.
   9. Submittals shall provide sufficient pictorial, descriptive and diagrammatic data on each item to show its conformance with the Drawings and Specifications. Any options or special requirements shall be so indicated. All applicable information shall be clearly indicated with arrows or another approved method. Any non-applicable information shall be crossed out.
   10. Submittals shall include additional information as required in other sections of this Division.
   11. Submittals shall include certification by the General Contractor and Subcontractor that the material submitted is in accordance with the Contract Documents signed and dated.

12. Reports or information requiring certification shall be certified by an authorized officer of the manufacturer or testing agency.
13. Submittals shall include Certified Shop Drawings showing dimensions, loading details, anchor bolt locations, and inserts required for each piece of equipment set on concrete in sufficient time to cause no delay in the Work.
14. Equipment and material submittals shall show sufficient data including all performance data, recommended installation details, and sufficient data to indicate complete compliance with the Contract Documents, including proper sizes, clearances, capacities, materials, and finishes.

C. Required Shop Drawing Submittals:

1. Submittal Shop Drawings, including, but not limited to the following items.
2. Basic Materials and Methods ..... See Section 26 00 02.
3. Wire and Cable ..... See Section 26 05 19.
4. Grounding ..... See Section 26 05 26.
5. Raceways ..... See Section 26 05 33.
6. Panelboards ..... See Section 26 24 16.
7. Wiring Devices ..... See Section 26 27 26.
8. Safety and Disconnect Switches ..... See Section 26 28 16.
9. Enclosed Controllers ..... See Section 26 29 13.
10. Motors ..... See Section 26 70 00.
11. Control System ..... See Section 26 90 21.
12. Pump Control Panel ..... See Section 26 90 22.
13. Controls Components ..... See Section 26 90 25.
14. Coordination Drawings as required by this Section.
15. As-Built Drawings.

D. Shop Drawing Submittal Review:

1. Shop Drawings will be reviewed for general conformance with the design concept of the project and general compliance with the information given in the Contract Documents. Any action shown in review comments is subject to the requirements of the Contract Documents. The submitting Contractor is responsible for: dimensions that shall be confirmed at the job site; fabrication processes and techniques of construction; coordination of his work with that of all other trades; and the satisfactory performance of his work.

E. Certifications and Test Reports:

1. The Engineer may, at their discretion, witness any or all on and off site acceptance and operational testing. Submit a detailed listing of certification and testing for each system indicating estimated dates for completion of system installation.
2. Test procedures and test result reporting forms shall be submitted for review no later than the date of the certification and testing listing submittal.
3. Submit four copies (coordinate with commissioning requirements) of all certifications and test reports to the Engineer for review adequately in advance of completion of the Work to allow for remedial action as required to correct deficiencies discovered in equipment and systems.
4. Certifications and test reports to be submitted shall include, but not be limited to those items outlined in Section 26 01 26 - Electrical Testing.
5. Notify the Engineer in writing one week prior to all scheduled testing to allow time for Engineer to schedule witnessing of testing, where elected by the Engineer.

1.5 OPERATING AND MAINTENANCE MANUALS

A. Submit two copies of Operating and Maintenance Manuals to the Engineer for approval prior to the beginning of operator training. Provide four approved Operating and Maintenance Manuals for use in operator training. Manuals shall be bound in rigid cover, 3-ring binders with spine and cover labels and shall provide operating and maintenance information for every piece of equipment furnished under this Specification. All sections shall be typed and indexed into sections and labeled for easy reference. Bulletins containing information about equipment that is not installed on the project shall be properly marked up or stripped and reassembled. All pertinent information required by the Owner for proper operation and maintenance of equipment supplied shall be clearly and legibly set forth in memoranda which shall, likewise, be bound with bulletins. As a minimum, the following information shall be provided as applicable:

1. Complete description of each system, item of equipment, and apparatus provided under this Division, including ratings, capacities, performances, data and curves, characteristics identifying name and number, locations, and wiring diagrams, including sources for all parts.
2. Fully detailed parts lists, including all numbered parts and recommended spare parts, of each item of equipment and apparatus provided under this Division.
3. Manufacturer's printed instructions describing operation, service, maintenance, and repair of each item of equipment and apparatus.
4. Typewritten record of tests made of materials, equipment, and systems included under this Division. Such records shall state the dates the tests were conducted, name(s) of person(s) making and witnessing the tests, and citing any unusual conditions relevant to the tests.
5. Identifying names, name tags designations and locations for all equipment.
6. Fuse and motor heater information including location and use.
7. Equipment and motor nameplate data.
8. Copies of all approved Shop Drawing submittals.
9. Fabrication drawings.
10. Equipment and device bulletins and cut sheets clearly highlighted to show equipment installed on the project and including performance curves and data as applicable.
11. Maintenance instructions clearly highlighted to show all required periodic maintenance and lubrication.
12. Wiring diagrams.
13. Operating instructions clearly highlighted to show proper operating procedures for all equipment.
14. Exploded parts views and parts list for all equipment and devices.
15. Color-coding charts for all painted equipment and conduit.
16. Location and listing of all spare parts and special keys and tools furnished to the Owner.

B. Tools: Provide and deliver to the Owner's authorized representative any special tools required for maintenance of systems, equipment, and apparatus installed under this Division prior to requesting final acceptance of the installation.

C. Commissioning requirements are part of this contract.

1.6 CODES, PERMITS AND FEES

A. General:

1. Comply with the most recently revised versions of applicable laws, rules, regulations, and ordinances of federal, state, and local utilities and authorities. Where alterations to and deviations from the Contract Documents are required by said authority, report the

requirements and secure approval before starting work. Obtain all applicable permits, licenses and inspections and pay all fees charged by above authorities.

B. Code Design Basis:

1. The following codes and ordinances were used in the design of the project and shall be complied with during construction of the project.
   a) Electrical Code – NEC, most recent edition enforced.

C. Precedence:

1. Where Contract Document requirements are in excess of Code requirements and are permitted under the Code, the Contract Documents shall govern. None of the terms or provisions of the drawings or specification shall be construed as waiving any of the rules, regulations or requirements of these authorities. In the event of conflict between the Contract Documents and the local enforcing authority, the latter shall rule. Any modifications resulting there from shall be made without additional cost to the Owner or Engineer. This Contractor shall report any such modifications to the Engineer and secure his approval before proceeding.

1.7 QUALITY ASSURANCE

A. Materials/Methods:

1. Manufacturers, materials and methods described in the various sections of the Specifications, and indicated on the Drawings are intended to establish a standard of quality only. It is not the intention of the Engineer to discriminate against any product, material or method that is equal to the standards as indicated and/or specified, nor is it intended to preclude open, competitive bidding. The fact that a specific manufacturer is listed as an acceptable manufacturer should not be interpreted to mean that the manufacturers standard product would meet the requirements of the project design, Specifications and space constraints.

B. Alternative Products/Materials/Methods:

1. Products by other reliable manufacturers, other materials, and other methods may be accepted provided they have equivalent capacity, construction, and performance. Under no circumstances shall any substitution be made without the prior written approval of the Engineer.
2. Wherever a definite product, material or method is specified and there is not a statement that another product, material or method will be acceptable, it is the intention of the Engineer that the specified product, material or method is the only one that shall be used without prior approval.

C. Alternative Equipment:

1. Where substituted or alternative equipment is used on the project, it shall be the responsibility of the Contractor or Subcontractor involved to verify that the equipment will fit in the space available, including all required Code and maintenance clearances, and to coordinate all equipment requirements and provisions with the Electrical Design and all other Contractors.

D. Compatibility:

1. Provide products that are compatible with other products of the electrical work, and with other work requiring interface with the electrical work, including electrical connections and control devices. For exposed electrical work, coordinate colors and finishes with other work. Determine in advance of purchase that equipment and materials proposed for installation will fit into the confines indicated, leaving adequate clearance as required by applicable codes and for adjustment, repair, and replacement.

1.8 SITE VISIT AND FAMILIARIZATION

A. General:

1. Become familiar with the Drawings and Specifications, examine the premises, and understand the conditions under which the Contract shall be performed, prior to submitting a bid.

B. Site:

1. Be informed of the site conditions, verify locations of new and existing equipment and determine exact requirements for connections.

C. Coordination:

1. Submission of a bid for this project infers that the Electrical Contractor has visited the site and has become familiar with the Drawings and site conditions and has included in his proposal, all work necessary to properly install the systems on the project.

D. Pre-Bid Conference:

1. Refer to Division 1.

1.9 DRAWINGS AND SPECIFICATIONS

A. General:

1. The Drawings are schematic in nature and indicate approximate locations of the electrical systems, equipment, fixtures and devices, except where specific locations are noted and dimensioned on the Drawings. All items are shown approximately to scale. The intent is to show how these items shall be integrated into the project site. Locate all items by on the job measurements and in accordance with the Contract Documents. Cooperate with other trades to ensure project completion as indicated.

B. Location:

1. Prior to locating electrical devices, light fixtures, and other items, obtain the Engineer's approval as to exact location. Locations shall not be determined by scaling Drawings. Mount lighting fixtures and electrical devices at the heights directed by the Engineer. Contractor shall be responsible for costs of redoing work of trades necessitated by failure to comply with this requirement.
2. All electrical devices, lighting fixtures, and other devices shall be referenced to coordinated, established data points and shall be located to present symmetrical arrangements with these points and to facilitate the proper arrangements of acoustical tile panels and other similar panels with respect to the mechanical and electrical outlets and devices. Electrical devices, fixtures, and outlets shall be referenced to such features as wall and ceiling furring, balance, border widths, masonry joints, etc. Outlets in acoustical tile shall occur symmetrically in tile joints or in the centers of whole tiles and the exact location of each outlet and the arrangements to be followed shall be acceptable to the Engineer. Outlets in wall tile or masonry construction shall occur symmetrically in the centers of whole tiles, bricks, or blocks and the exact location of each outlet and the arrangement to be followed shall be acceptable to the Engineer.
3. The Drawings show diagrammatically the location of the various outlets and apparatus. Exact locations of these outlets and apparatus shall be determined by reference to the general Drawings and to all detail Drawings, equipment Drawings, rough-in Drawings, etc., by measurements at the building, and in cooperation with the other trades. The Owner and Engineer reserve the right to make any reasonable change in location of any outlet or apparatus before installation, without additional cost to the Owner.

C. Specifications:

1. The Specifications are intended to supplement the Drawings and it is not in the scope of the specifications to mention any part of the work that the Drawings are competent to fully

explain. Conversely, any part of the work that the specification is competent to fully explain may not be mentioned on the Drawings.

1.10 DISCREPANCIES

A. Clarification:

1. Clarification shall be obtained before submitting a proposal for the Work under this Division as to discrepancies or omissions from the Contract Documents or questions as to the intent thereof.

B. Detailed Instructions:

1. Should it appear that the work hereby intended to be done or any of the materials relative thereto is not sufficiently detailed or explained in the Drawings or Specifications, then the Contractor shall apply to the Engineer for such further Drawings or explanations as may be necessary, allowing a 10 working day time period for the Engineer to respond.

C. Interpretations:

1. Should any doubt or question arise respecting the true meaning of Drawings or Specifications, reference shall be made to the Engineer, whose written decision shall be final and conclusive.

D. Contractor Agreement:

1. Consideration will not be granted for misunderstanding of the amount of work to be performed. Submission of a bid conveys full Contractor agreement of the items and conditions specified, shown, scheduled, or required by the nature of the project.

1.11 UTILITIES

A. General:

1. Utility information shown on the Drawings has been shown based upon data obtained from the site survey and the agencies having jurisdiction and are accurate to the best of the knowledge of the Engineer.

B. Coordination:

1. The Contractor shall be responsible for field verification of the actual location of site and/or building utilities and shall make modifications necessary for connection to or construction around those utilities at no additional cost to the Owner or Engineer.

1.12 TEMPORARY FACILITIES

A. General:

1. Refer to Uniform General Conditions and Division 1 for requirements concerning temporary electrical facilities.

1.13 SITE OBSERVATION

A. General:

1. Observations at the site to verify general compliance with Contract Documents shall be made periodically by the Engineer or his representative. Written observation comments shall be submitted to the General Contractor for review and a written response.

1.14 COORDINATION OF ELECTRICAL WORK

A. General:

1. Refer to Division 1 for general coordination requirements applicable to the entire work.
2. It is recognized that the Contract Documents are diagrammatic in showing certain physical relationships that must be established within the electrical work and in its

interface with other work, including utilities and mechanical work, and that such establishment is the exclusive responsibility of the Contractor. The Drawings show diagrammatically the sizes and locations of the various conduit and raceway systems and equipment items along with the sizes of the major interconnecting distribution, without showing exact details as to elevations, offsets, control lines, and installation details.

3. Arrange electrical work in a neat, well organized manner with services running parallel with primary lines of the building construction and with a minimum of 7' overhead clearance where possible.
4. The Contractor shall carefully lay out his work at the site to conform to the structural conditions, to avoid obstructions and to provide proper grading of lines. Exact locations of outlets, apparatus and connections thereto shall be determined by reference to detail Drawings, equipment Drawings, roughing-in Drawings, etc., by measurements at the building and in cooperation with other Contractors and, in all cases, shall be subject to the approval of the Engineer. Relocations necessitated by the conditions at the site or directed by the Engineer shall be made without any additional cost to the Owner or Engineer.
5. All conduit and boxes except those in the various equipment rooms, in unfurnished spaces or where specifically designated herein or on the Drawings shall be run concealed in furring, plenums, and chases. Wherever conditions exist which would cause any of these items to be exposed in finished spaces, the Contractor whose work is involved shall immediately call the situation to the attention of the Engineer and shall stop work in those areas until the Owner's Representative or General Contractor directs the resumption of the work. Submit for approval a Shop Drawing for any change in equipment placement, etc.
6. Equipment has been chosen to fit within the available space with all required Code and maintenance clearances and shall be installed as shown. Every effort has been made to also accommodate equipment of other approved manufacturers; however, since equipment and access space requirements vary, the final responsibility for installation access and proper fit of substituted equipment rests with the Contractor.
7. System interferences shall be handled by giving precedence to pipe lines that require a stated grade for proper operation. Where space requirements conflict, the following order of precedence shall, in general, be observed:
   a. Building Lines,
   b. Structural members,
   c. Soil and drain piping,
   d. Utility water piping,
   e. Electrical conduit.
8. Locate electrical equipment properly to provide easy access. Arrange entire electrical work with adequate code access for operation and maintenance.
9. Advise other trades of openings required in their work for the subsequent move in of large units of electrical work (equipment).
10. Coordinate all items that will affect the installation of the work of this Division. This coordination shall include, but not be limited to: Voltage, ampacity, capacity, electrical connections, space requirements, sequence of construction, building requirements and special conditions.
11. When submitting Shop Drawings on the project, this Contractor is indicating that all necessary coordination has been completed and that the systems, products and equipment submitted can be installed in the building and will operate as specified and intended, in full coordination with all other Contractors and Subcontractors.

1.15 MATERIAL AND WORKMANSHIP

A. General:

1. Materials and equipment shall be new, of best grade and quality, and standard products of reputable manufacturers regularly engaged in the production of such materials and equipment.

B. Workmanship:

1. Work shall be executed and materials installed in accordance with the best practice of the trades in a thorough, substantial, workmanlike manner by competent workmen, presenting a neat appearance when completed.

C. Manufacturer's Recommendations:

1. With exceptions as specified or indicated on the Drawings or in the Specifications, apply, install, connect, erect, use, clean, and condition manufactured articles, materials, and equipment per manufacturer's current printed recommendations. Copies of such printed recommendations shall be kept at the job site and made available as required.

1.16 SPACE REQUIREMENTS

A. General:

1. Determine in advance of purchase that the equipment and materials proposed for installation will fit into the confines indicated, leaving adequate code clearances for adjustments, repair, or replacement.

B. Clearance:

1. Allow adequate space for clearance in accordance with requirements of the Code and local inspection department.

C. Scheduled Equipment:

1. The design shown on the Drawings is based on the equipment scheduled.

D. Responsibility:

1. Since space requirements and equipment arrangement vary for each manufacturer, the responsibility for initial access and proper fit rests with the Contractor.

E. Review:

1. Final arrangement of equipment to be installed shall be subject to the Engineer's review.

1.17 SAFETY REGULATIONS

A. All electrical work shall be performed in compliance with all applicable and governing safety regulations. All safety lights, guards, signs, and other safety materials and provisions required for the performance of the electrical work shall be provided by and operated by the Electrical contractor.

1.18 DELIVERY, STORAGE AND HANDLING OF MATERIALS

A. General:

1. Protect all materials and equipment to be installed under this Division from physical and weather damage.

B. Scope:

1. Work under this Division shall include, but not limited to:
   a) Shipping from point of manufacture to job site,
   b) Unloading, moving, and storage on site with appropriate protection as required to properly protect equipment from rust, drip, humidity, dust, or physical damage,
   c) Hoisting and scaffolding of materials and equipment included in this Division,
   d) Ensuring safety of employees, materials, and equipment using such hoisting equipment and scaffolding as is required for safety.

C. Coordination:

1. All large pieces of apparatus which are to be installed in the building and which are too large to permit access through doorways, stairways or shafts shall be brought to the job by the Contractor and shall be placed in the spaces before enclosing partitions and structure are completed. All apparatus shall be cribbed up from the floor by Contractor and shall be covered with tarpaulins or other protective covering where required for protection.

1.19 NOISE AND VIBRATION

A. General:

1. One year warrants the electrical systems, and their component parts to operate without objectionable noise or vibration. Noise from systems or equipment that results in noise within occupied spaces above the recommended NC curves (refer to ASHRAE Standard) shall be considered objectionable. Vibration shall not be apparent to the senses in occupied areas of the building. Objectionable noise, vibration, or transmission thereof to the building shall be corrected.

1.20 CLEANING, ADJUSTING, AND START-UP

A. Clean up:

1. The Contractor shall clean away from the job site all debris, surplus material, and similar items, resulting from his work or operations, leaving the job and equipment in a clean condition. The Contractor shall thoroughly clean all pieces of equipment, conduit, boxes, fixtures, and similar items, leaving the installation in a first class condition.

B. Start-up Services:

1. Where specified for any individual item of electrical equipment, provide a factory-authorized representative for testing, start-up of equipment, and instruction of Owner's operating personnel. Certify that these services have been performed by including a properly executed invoice for these services, or a letter from the manufacturer.

C. Lubrication:

1. Provide means for lubricating all bearings and other machine parts. Extend a lubrication tube with suitable fitting to an accessible location and identify it where lubrication fittings are concealed or inaccessible. Lubricate all parts requiring lubrication and keep them adequately lubricated until final acceptance by the Owner.

D. Testing:

1. See Section 26 01 26 – Electrical Testing.

E. Operation Prior to Completion:

1. When any piece of electrical equipment is operable and it is to the advantage of the Contractor to operate the equipment, he may do so, providing that he properly supervises the operation, and has the Engineer's written permission to do so. The warranty period shall, however, not commence until such time as the equipment is operated for the beneficial use of the Owner, or date of substantial completion, whichever occurs first. Regardless of whether or not the equipment has or has not been operated, the Contractor shall properly clean the equipment, properly adjust, and complete all deficiency list items before final acceptance by the Owner. The date of final acceptance and the start of the warranty may not be the same date.

1.21 FINAL REVIEW

A. General:

1. Upon completion of the Work, perform a final test of the entire system.

2. The system shall be operating properly and meet commissioning requirements.
3. After the final test, any changes or corrections noted as necessary for the Work to comply with these Specifications or the Drawings shall be accomplished without delay in order to secure final acceptance of the Work.
4. The date for the final test shall be sufficiently in advance of the Contract completion date to permit execution, before expiration of the Contract, of any adjustments or alterations that the final acceptance tests indicate as necessary for the proper functioning of all equipment. Any such modifications shall be completed within the time allotted for completion of the Contract. Retests shall be conducted as directed and shall be of such time duration as necessary to ensure proper functioning of adjusted and altered items. Retests shall not relieve the Contractor of completion date responsibility.
5. Certificates, including certificates of occupancy from local authorities and documents required herein, shall be completely in order and presented to the Engineer at least one week prior to the review.
6. Individuals knowledgeable of the systems and persons approved by the Engineer shall be present at this final inspection to demonstrate the system and prove the performance of the equipment.

1.22 OPERATION AND MAINTENANCE TRAINING (OWNER INSTRUCTION)

A. General:
   1. The Contractor and appropriate factory-trained representatives shall instruct the Owner's representative in the proper operation and maintenance of all electrical and control systems and equipment, and shall explain all warranties.

B. Training Agenda Outline:
   1. Prior to instruction of Owner Personnel, the Contractor shall prepare a typed outline, listing the subjects that will be included in this instruction, and shall submit the outline for review by the Engineer at least 2 weeks prior to the time of the training.

C. Training Requirements:
   1. Training shall be provided per the specific requirements in other sections of these specifications. In addition to training required in other sections of the specifications, the Contractor shall conduct specifically organized training sessions in the overall operation and maintenance of the electrical and control system for personnel employed by the Owner. The training sessions shall be conducted to educate and train the personnel in operations and maintenance of all components of the electrical system outside the training requirements in the other Sections.
   2. Training shall include, but not be limited to, the following:
      a) Preventative maintenance procedures,
      b) Trouble-shooting,
      c) Calibration,
      d) Testing,
      e) Replacement of components,
      f) Equipment operation.
   3. At a minimum, one training session, at least 2 hours in duration, shall be conducted at the facility after start-up of the electrical and control systems. The Contractor shall prepare and assemble specific instruction materials for each training session and shall supply such materials to the Owner at least 2 weeks prior to the time of the training.

D. Certification:
   1. At the conclusion of the instruction period, the Contractor shall obtain the signature of each person being instructed on each copy of the approved training outline to signify that

the personnel has a proper understanding of the operation and maintenance of the systems, and resubmit the signed outlines.

E. Other Requirements:

1. Refer to other Division 26 Sections for additional Operator Training requirements for specific pieces of equipment or specific systems.
2. The Contractor shall coordinate the Operator Training requirements listed above with the Owner Instruction requirements of Division 1.

1.23 CONTRACTOR WARRANTIES AND GUARANTEES

A. General:

1. Contractor shall guarantee all material and equipment installed by him against defects in workmanship and material for a period of 12 months after final acceptance of the work by the Owner. He shall repair or replace any materials or equipment developing such defects within that time promptly on due notice given him by the Owner and at Contractor's sole cost and expense.

B. Equipment:

1. All equipment bearing a manufacturer's guarantee, such as electrical equipment, devices, components, and similar items, shall be construed to have an extended guarantee to the Owner by the manufacturer. Any such equipment that proves defective in materials or workmanship within the guarantee period is to be replaced by the Contractor in accordance with the manufacturer's guarantee.

PART 2 PRODUCTS

2.1 NOT USED.

PART 3 EXECUTION

3.1 NOT USED.

END OF SECTION

SECTION 26 00 01
ELECTRICAL SCOPE OF WORK

PART 1 GENERAL

1.1 SECTION INCLUDES

A. Project Description

B. Electrical Scope of Work

1.2 PROJECT DESCRIPTION

A. Project generally includes the following:

1. Coordination, installation, and testing of multiple packaged simplex and duplex effluent pumping systems.
2. Coordination, installation, and testing of Wastewater Treatment Facility control and monitoring instrumentation.
3. Coordination, installation, and testing of Wastewater Treatment Facility lagoon aeration blowers including the supply and installation of new blower motor starters.
4. Coordination, installation, and testing of Wastewater Treatment Facility control panel including the supply, installation and programming of a new plant control panel.
5. Coordination, installation, and testing of a packaged duplex pumping system at the Wastewater Treatment Facility.
6. Supply and installation of new lighting and receptacles in the Wastewater Treatment Facility.

1.3 ELECTRICAL SCOPE OF WORK

A. Provide labor, materials, tools, machinery, equipment, fixtures, devices, and services necessary to complete the specified work of this and all other Divisions. Coordinate work with other trades to prevent conflicts without impeding job progress.

B. Project work includes, but is not limited to:

1. A complete power distribution system including, but not limited to:
   a) Panelboards,
   b) Cable feeders,
   c) Overcurrent devices,
   d) Raceways,
   e) All other components shown on the Drawings, specified, or required for a fully operational system.
2. A complete grounding system including, but not limited to:
   a) Ground rods,
   b) Bonding,
   c) Ground conductors,
   d) Raceways,
   e) All other components shown on the Drawings, specified or required for a fully operational system.
3. A complete lighting system including, but not limited to:
   a) Lighting fixtures,
   b) Switches,

c) Controls,
d) Branch circuit wiring,
e) Raceways,
f) All other components shown on the Drawings, specified, or required for a fully operational system.

4. A complete branch circuit distribution system including, but not limited to:
   a) Branch and circuit wiring,
   b) Raceways,
   c) Wiring devices,
   d) Controls,
   e) Connections to motors and equipment,
   f) All other components shown on the Drawings, specified, or required for a fully operational system.
5. Complete packaged simplex and duplex effluent pumping systems including, but not limited to:
   a) Packaged pump control panels,
   b) Outdoor equipment posts/racks,
   c) Feeder and circuit wiring,
   d) Raceways,
   e) Controls,
   f) Panelboards,
   g) Connections to motors and equipment,
   h) All other components shown on the Drawings, specified, or required for a fully operational system.
6. Aeration blowers including, but not limited to:
   a) Motor starters,
   b) Feeder and circuit wiring,
   c) Raceways,
   d) Packaged pump control panels,
   e) Controls,
   f) Connections to motors and equipment,
   g) All other components shown on the Drawings, specified, or required for a fully operational system.
7. A complete system of miscellaneous electric controls and control wiring as shown on the Drawings and specified.
8. A complete plant control system including but not limited to:
   a) Control panel with programmable logic controller and operator interface terminal
   b) Control and signal and circuit wiring,
   c) Raceways,
   d) Instrumentation,
   e) Controls,
   f) Connections to motor operated valves and equipment,
   g) Detailed control panel and system design, supply, testing and commissioning,
   h) All other components shown on the Drawings, specified, or required for a fully operational system.
9. Electrical testing and certification as specified.
10. Concrete housekeeping pads, and other supports as required for electrical equipment and components.

11. Connections to equipment furnished by the General Contractor or other Divisions.
12. Additional items as shown on the Drawings or specified.

1.4 RELATED SECTIONS

A. Packaged Pumping Equipment Specifications
B. Section 26 00 00 – Electrical General Provisions
C. Section 26 00 02 – Basic Materials and Methods
D. Section 26 01 26 – Electrical Testing
E. Section 26 05 19 – Wire and Cable
F. Section 26 05 26 – Grounding
G. Section 26 05 33 – Raceways
H. Section 26 25 16 – Panelboards
I. Section 26 27 26 – Wiring Devices
J. Section 26 28 16 – Safety and Disconnect Switches
K. Section 26 28 00 – Overcurrent Protective Devices
L. Section 26 29 13 – Enclosed Controllers
M. Section 26 70 00 – Motors
N. Section 26 90 21 – Control System
O. Section 26 90 22 – Pump Control Panel
P. Section 26 90 25 – Control Components

PART 2 PRODUCTS

2.1 GENERAL

A. Refer to specific Sections of the Specification for equipment.

PART 3 EXECUTION

3.1 GENERAL

A. Installation shall be in accordance with the Specification section pertaining to the individual Equipment.

END OF SECTION

SECTION 26 00 02
BASIC MATERIALS AND METHODS

PART 1 GENERAL

1.1 SECTION INCLUDES

A. Basic requirements for electrical systems, including but not limited to:
   1. Manner of running conduits
   2. Hangers and supports
   3. Attachment
   4. Openings, cutting, and patching
   5. Excavation, trenching, and backfilling
   6. Flame spread properties of materials
   7. Penetration flashing and seals
   8. Cleaning and painting of electrical work
   9. Electrical system identification
   10. Warning signs and operational tags
   11. Prohibited markings
   12. Wiring device and equipment mounting heights

1.2 DESCRIPTION OF WORK

A. This section covers the basic materials and methods of electrical construction as shown, scheduled, indicated, and specified.

1.3 DEFINITIONS

A. For the purposes of providing materials and installing electrical work, the following definitions shall be used:
   1. Outdoor Area: Exterior locations where the equipment is normally exposed to the weather and including below grade structures, such as vaults, manholes, handholes and in-ground pump stations.
   2. Architecturally Finished Area: Offices, laboratories, conference rooms, restrooms, corridors and other similar occupied spaces.
   3. Non-architecturally Finished Area: Pump, chemical, mechanical, electrical rooms and other similar process-type rooms.
   4. Highly Corrosive Areas: Rooms or areas identified on the Drawings where there is a varying degree of spillage or splashing of corrosive materials such as water, wastewater or chemical solutions; or chronic exposure to corrosive, caustic or acidic agents, chemicals, chemical fumes or chemical mixtures.
   5. Hazardous areas: Class I, II or III areas as defined in NFPA 70.
   6. Shop Fabricated: Manufactured or assembled equipment for which a UL test procedure has not been established.

1.4 RELATED SECTIONS

A. Related Sections include but are not necessarily limited to:
   1. Section 26 00 00 – Electrical General Provisions

2. Section 26 00 01 – Electrical Scope of Work
3. Section 26 00 02 – Basic Materials and Methods
4. Section 26 01 26 – Electrical Testing
5. Section 26 05 19 – Wire and Cable
6. Section 26 05 26 – Grounding
7. Section 26 05 33 – Raceways
8. Section 26 25 16 – Panelboards
9. Section 26 27 26 – Wiring Devices
10. Section 26 28 16 – Safety and Disconnect Switches
11. Section 26 28 00 – Overcurrent Protective Devices
12. Section 26 29 13 – Enclosed Controllers
13. Section 26 70 00 – Motors
14. Section 26 90 21 – Control System
15. Section 26 90 22 – Pump Control Panel
16. Section 26 90 25 – Control Components

1.5 STANDARDS AND REFERENCES

A. American National Standards Institute (ANSI):
   1. C2, National Electrical Safety Code
   2. Z535.1, Safety Color Code
   3. Z535.2, Environmental and Facility Safety Signs
   4. Z535.3, Criteria for Safety Symbols
   5. Z535.4, Product Safety Signs and Labels.

B. National Fire Protection Association (NFPA):
   1. 70, National Electrical Code (NEC)
   2. 70E, Standard for Electrical Safety in the Workplace
   3. 79, Electrical Standard for Industrial Machinery
   4. 820, Standard for Fire Protection in Wastewater Treatment and Collection Facilities

C. Occupational, Health and Safety Administration (OSHA):
   1. 1910.145, Specification for Accident Prevention Signs and Tags

D. All materials and equipment specified herein shall within the scope of UL Examination Services, be approved by the Underwriter's Laboratories for the purpose for which they are used and shall bear the UL label.

1.6 SUBMITTALS

A. Shop Drawings
   1. See Section 26 00 00.
   2. The Contractor shall submit to the Engineer, for review, a list of proposed manufacturers and product data on hangers, supports, and methods of attachment to the structure.
   3. Excavation and trenching plan, designed and sealed by a registered professional engineer.
   4. Cut sheets and samples of Electrical System Identification products.
   5. Refer to Division 1 for additional submittal requirements.

1.7 DELIVERY, STORAGE, AND HANDLING

A. See Section 26 00 00.

PART 2 PRODUCTS

2.1 ACCEPTABLE MANUFACTURERS

A. Refer to specific Division 26 sections and specific material paragraphs below.

B. Provide all components of a similar type by one manufacturer.

2.2 ELECTRICAL EQUIPMENT SUPPORTS

A. Approved manufacturers:
   1. Unistrut Building Systems
   2. B-Line
   3. Globe Strut

B. Material requirements:
   1. Galvanized steel: ASTM A123 or ASTM A153
   2. Stainless steel: AISI Type 316
   3. PVC coated galvanized steel: ASTM A123 or ASTM A153 and 20 mil PVC coating

2.3 NAMEPLATES

A. For labeling equipment enclosures and equipment that is visible with the enclosure door closed:
   1. Approved manufacturers catalog numbers:
      a) W. H. Brady Co., #B-1.
      b) Seton, “Setonply”.
   2. Materials: Phenolic, 2-ply engraved.
   3. Size:
      a) Surface: As required for the text.
      b) Thickness: 1/16 IN.
   4. Fabrication:
      a) Two layer laminated.
      b) Legend engraved through top lamination into bottom lamination.
      c) Drilled holes in each corner, for screw mounting.
   5. Colors: Black top surface, white core, unless otherwise indicated.
   6. Fasteners: Self-tapping stainless steel screws.

B. For labeling components inside equipment enclosures:
   1. Approved manufacturers catalog numbers:
      a) W. H. Brady Co., “Industrial Strength Tape” #42018
      b) Seton, “Component and General Identification Labels” #45553
      c) Panduit, “Standard Labeling Tape” LS4-33
   2. Materials: vinyl tape or vinyl cloth with printable topcoat.
   3. Colors: White background, black printing.

2.4 CONDUIT AND WIRE MARKERS

A. For control panels, electrical gear, pull and junction boxes:
   1. Material: vinyl or polyester tape.
   2. Approved manufacturer's catalog numbers:
      a) W. H. Brady Co., Indoor/Outdoor Vinyl Tape, B-580
      b) Seton, “Self-Laminating Wire Marker Labels” M7340
      c) Panduit, LS4M “Industrial Labeling Tape”
   3. Material: Heat shrinkable polyolefin.
   4. Approved manufacturer's catalog numbers:
      a) Seton, Welded Wire Marking Sleeves
   5. Colors: White background, black printing.

B. For conduit, manholes, handholes and exterior pad mounted electrical gear:
   1. Material: Aluminum or stainless steel.
   2. Approved manufacturer's catalog numbers:
      a) Panduit META-X or META54-X
   3. Legend: Embossed.
   4. Fasteners: Nylon, urethane or polypropylene strap.

2.5 SAFETY SIGNS

A. Approved manufacturers catalog numbers:
   1. W. H. Brady Co., #B-302 or #B-120
   2. Seton, Pressure Sensitive Vinyl or Tedlar Coated Plastic
   3. Panduit, GMM Polyester Film (Type PPS) or GMPE1 Rigid Polyethylene (Type PRS)

B. Materials, size and fabrication:
   1. For indoor use: Polyester or vinyl, surface area as required by the text, 4 mil minimum thickness, self-adhesive.
   2. For outdoor use and on entrances to electrical rooms or stations: Fiberglass or coated plastic, surface area as required by the text, minimum area 7 x 10 IN, 60 mil thickness, drilled holes for screw mounting.

C. Color in accordance with ASME (ANSI Z535.1, .2, .3 and .4) and OSHA 1910.145.

D. Minimum letter size on indoor signs, 3/16 in.

E. Maximize the letter size on outdoor signs to sufficiently fill the printable area on the sign.

F. Standards: ASME/ANSI Z535.1, Z535.2, Z535.3 and Z535.4, OSHA 1910.145.

PART 3 EXECUTION

3.1 MANNER OF RUNNING CONDUITS

A. All conduits shall be concealed in pipe chases, walls, furred spaces, topping, or above the ceilings of the building unless otherwise indicated.

B. Conduit may be run exposed in mechanical rooms, duct and piping chases, but only where necessary. All exposed conduit shall be run in the neatest, most inconspicuous manner, and parallel or perpendicular to the building lines.

C. All conduit and surface raceways shall be adequately and properly supported from the building structure by means recommended by the manufacturer, or by the use of hanger rods or clamps as herein specified.

D. Where limited space is available above the ceilings and below concrete beams or other deep projections, conduit shall be sleeved through the projection where it crosses rather than hung below them in a manner to provide maximum above-floor clearance.

E. No sleeves shall be installed through any concrete beam or other deep projection without written approval of the Engineer.

F. Run conduit to avoid proximity to heat producing equipment, piping and flues, keeping a minimum of 8" clear.

G. Whenever possible, install horizontal conduit runs above water piping.

H. Install all conduit to allow for adequate maintenance and access clearances to all equipment. The Contractor shall study all construction documents and carefully lay out all work in advance of fabrication and erection in order to meet the requirements of limited spaces. Where conflicts occur, the Contractor shall meet with all involved trades and the Construction Inspector and resolve the conflict prior to erection of any work in the area involved.

I. Conduit and raceway connections, rough-in, and stub-up locations for equipment shall be coordinated by the Contractor to provide locations in locations indicated on approved manufacturers equipment shop drawings. Connection, rough-in and stub-up locations shown on the Drawings are diagrammatic for general reference only.

3.2 HANGERS AND SUPPORTS

A. All supports required for the proper installation of equipment, wireway, and conduit shall be provided as hereinafter specified unless otherwise indicated on the Drawings.

B. All conduits shall be supported as specified in Section 26 05 33, unless specifically noted differently on the Drawings or in the Specifications, but in every case shall be adequate to support the raceway being suspended. The supports shall be from the structure to line of grade, with proper provision for expansion, contraction, vibration elimination, and anchorage.

C. Vertical conduits shall be supported from floor lines with riser clamps sized to fit the conduit and to adequately support their weight, with allowance for expansion and contraction. At the bases of conduit, where required for proper support, provide anchor base fittings or other approved supports.

D. Conduit shall not be supported from ductwork, piping, or equipment.

E. All electrical conduits and surface raceways exposed to view shall be run parallel to the adjacent building construction. All hangers shall be fastened to the building structure in a manner as hereinafter specified under "Attachment".

F. Single conduits running horizontally shall be supported by Caddy, Minerallac, or approved equal; adjustable conduit hangers from adequately sized rods (minimum 1/8") from the building structure. Refer to Section 26 05 33 for additional requirements.

G. Multiple conduits running horizontally shall be supported by trapeze channels suspended on rods or bolted to vertical building members. Channels shall be as manufactured by Unistrut, Superstrut, Kindorf, or approved equal. Conduits shall be secured to the channel with galvanized or stainless steel clamps. Refer to Section 26 05 33 for additional requirements.

H. Vertical conduits, both concealed and exposed, shall be supported by clamping to vertical surfaces or by means of clamps resting on adjacent beams, or floor slabs, or both as required by the installation. Refer to Section 26 05 33 for additional requirements.

I. Conduits and raceways run against building surfaces shall be supported by means recommended by the manufacturer, or by means of single or two-hole rigid conduit clamps.

Two-hole clamps shall be provided where size of conduit and installation conditions warrant Refer to Section 26 05 33 for additional requirements.

J. All auxiliary steel required for conduit, cable tray, and wire-way supports, etc. shall be provided by the Electrical Trades unless specifically indicated to be provided by others. All support steel and fasteners shall be galvanized.

K. Contractor shall review all Drawings, including Structural Drawings, for details regarding supports.

L. All supports shall be of type and arrangement to prevent excessive deflection, to avoid excessive bending stresses between supports, and to eliminate transmission of vibration.

M. Perforated strap shall not be used as a hanger material.

3.3 ATTACHMENT

A. The load and spacing on each hanger and/or insert shall not exceed the safe allowable load for any component of the support system, including the concrete that holds the inserts. Reinforcement at inserts shall be provided as required to develop the strength required.

B. All conduits not embedded in concrete or masonry shall be securely and independently supported so that no strain will be transmitted to outlet box and pull box supports, etc. Supports shall be rigid enough to prevent distortion of conduits during wire pulling.

C. Inserts shall be of a type which will not interfere with reinforcing and which will not displace excessive amounts of structural concrete. All methods of attachment to the structure and the use of after-set inserts shall be approved in writing by the Engineer.

D. All conduit and equipment supports shall be designed and installed to avoid interference with other piping, hangers, ducts, conduit, supports, building structures, equipment, etc. All conduit, and wireway shall be installed with due regard to expansion and contraction and the type of hanger method of support, location of support, etc. shall be governed in part by this Specification.

E. Hangers shall be attached to structure as follows:

1. Poured-in-place Concrete:
   a) Where conduits, equipment, etc., are supported under poured-in-place concrete construction, each hanger rod shall be fitted with a nut at its upper end, which shall be set into a UL-listed universal concrete insert placed in the form work before concrete is poured.
   b) Where inserts are placed in the bottom faces of concrete joists which are too narrow to provide adequate strength of concrete to hold the insert properly, or where a larger insert would require displacement of a bottom joist steel, the hanger rod shall be suspended from the center of a horizontal angle iron, channel iron, I-beam, etc., spanning across to adjacent joist. The angle iron shall be bolted to nonadjustable concrete inserts of the "spot" type, of physical size small enough to avoid the bottom joist steel.
2. Steel Bar Joist:
   a) Where light loads are supported under bar joists, hanger rods may be run with a washer and two nuts.
   b) Where larger loads are supported beneath bar joists, hanger rods shall be secured to angle irons of adequate size; each angle shall span across two or more joists as required to distribute the weight properly and shall be welded to the joists or otherwise permanently fixed thereto.
3. Steel Beams: Where loads are supported under steel beams, approved type beam clamps shall be used.

4. Wood Framing: Where loads are supported from wood framing, hanger rods shall be attached to framing with side beam brackets or angle clips.
5. Miscellaneous Steel: All miscellaneous steel members, angles, rods, supports, and similar items specified or required for this project shall be galvanized for indoor use or hot dipped galvanized for exterior use and where exposed to ambient conditions. All required miscellaneous steel shall be provided by this Division.

F. Fastening of conduits, etc., shall be as follows: To wood members - by wood screws; to masonry - by threaded metal inserts, metal expansion screws, or toggle bolts, whichever is appropriate for the particular type of masonry; to steel – machine – screws or welding (when specifically permitted or directed), or bolts, and to concrete by suitable inserts anchored to reinforcing steel, and poured in place unless other means are indicated on the plans. Power-actuated fasteners (shooting) will not be acceptable under any circumstances unless approved by the Engineer in writing.

3.4 OPENINGS, CUTTING AND PATCHING

A. General:

1. The Contractor shall be responsible for coordinating openings in the building construction for installation of electrical systems. Comply with the requirements of Division 1 for the cutting and patching of other work to accommodate the installation or electrical work. Except as individually authorized by the Engineer, cutting and patching of electrical work to accommodate the installation of other work is not permitted.

B. Cut and Patch:

1. Cut and patch walls, floors, etc., resulting from work in existing construction or by failure to provide proper openings or recesses in new construction.

C. Methods or Cutting:

1. Openings cut through concrete and masonry shall be made with masonry saws and/or core drills and at such locations acceptable to the Engineer. Impact-type equipment may be used upon written approval of the Engineer. Openings in pre-cast concrete slabs for conduits, outlet boxes, etc., shall be core drilled to exact size.

D. Approval:

1. If holes or sleeves are properly installed and cutting and patching becomes necessary, it shall be done at no change in Contract amount. Undertake no cutting or patching without first securing written approval from the Engineer. Patching shall create a surface which is structurally and aesthetically equal to the surface surrounding the area patched and shall be performed by the trade whose work is involved at no change in the Contract amount.

E. Protection:

1. Openings through exterior walls or roofs shall be provided with suitable covers while they are left open to protect the property or materials involved. Any openings through walls below grade shall be properly protected to prevent entrance of water or other damaging elements.

F. Restoration:

1. All openings shall be restored to "as-new" condition under the appropriate Specification Section for the materials involved, and shall match remaining surrounding materials and/or finishes. Restoration work shall be performed by the trades who originally installed the work being restored and shall be performed at no cost to the Owner or Engineer.

G. Masonry:

1. Where openings are cut through masonry walls, provide and install lintels or other structural supports to protect the remaining masonry. Adequate supports shall be provided during the cutting operation to prevent any damage to the masonry occasioned

by the operation. All structural members, supports, etc., shall be of the proper size and shape, and shall be installed in a manner acceptable to the Engineer.

H. Special Note:

1. No coring, boring, or excavating which will weaken the structure shall be undertaken.

3.5 EXCAVATING, TRENCHING AND BACKFILLING

A. General:

1. The work hereunder includes whatever excavating and backfilling is necessary to install the electrical work. Coordinate the electrical work in the same area, including excavating and backfilling, dewatering, floor protection provisions, other temporary facilities needed for protection and proper performance of excavating and backfilling.

B. Standards:

1. Except as otherwise indicated, comply with the applicable provisions of Division 2 for electrical work excavating and backfilling. Refer instances of uncertain applicability to the Engineer for resolution before proceeding with the Work.

C. The bottoms of trenches shall be excavated to required depths, slope and grade. The bottom of the trench shall be accurately excavated to provide firm, uniform bearing for the bottom of the raceways and duct-banks. Where mud or unstable soil is encountered in bottom of trench, it shall be removed to firm-bearing and the trench shall be back filled with bedding sand to proper grade and tamped to provide uniform firm support.

D. The bottom of trenches shall be accurately graded to provide proper fall and uniform bearing and support for each section of the conduit on undisturbed soil or 2" of sand fill at every point along its entire length. In general, grading for electrical duct-banks and conduits shall be from building to manhole, and from a high point between manholes to each manhole.

E. Exercise care not to excavate below required depth, leaving a flat bed of undisturbed earth; firm and secure before laying cable and duct-banks. In the event rock is encountered, excavate 6" below required depth and backfill to required depth with bedding sand, and compact to minimum 95% compaction.

F. All grading in the vicinity of excavation shall be controlled to prevent surface ground water from flowing into the excavations. Any water accumulated in the excavations shall be removed by pumping or other acceptable method. During excavation, material suitable for backfilling shall be stacked in an orderly manner a sufficient distance back from edges of trenches to avoid overloading and prevent slides or cave-ins. Material unsuitable for backfilling shall be wasted and removed from the site and properly disposed of.

G. The Contractor shall be fully responsible for the safety of persons, materials and equipment in or near trenches or other excavations and provide all required sloping, shoring, railings and other protective provisions.

H. If any unknown and/or uncharted utilities are encountered during excavation, promptly notify Engineer and wait for his/her instruction before proceeding,

I. If such unknown utilities are encountered and work is continued without contacting the Engineer for instructions, and damage is caused to said utilities, the Contractor shall repair at his own expense, such damage to the satisfaction of the owner or utility company concerned.

J. Trenches shall not be backfilled until all required tests have been made by the Contractor and approved by the Engineer and any local authorities having jurisdiction.

K. Backfill shall be compacted or cement stabilized sand up to 6" above the top of conduit.Backfill up to grade shall be in maximum 6" lifts with minimum 95% compaction of lifts. Refer to Division 2 or elsewhere in Contract Documents for additional trenching and backfill requirements.

L. Opening and Reclosing Pavement, Landscape Areas and Lawns: Where excavation requires the opening of existing walks, street, drives, other existing pavement or lawns; such surfaces shall be cut as required to install new conduit and to make new connections to existing conduits. The sizes of the cut shall be held to a minimum, consistent with the work to be accomplished. After the installation of the new work is completed and the excavation has been backfilled and flooded, the area shall be patched or replaced, using materials to match those cut out or removed. Patches shall thoroughly bond with the original surfaces; these shall be level with them and shall meet all the requirements established by the authorities having jurisdiction over such areas. All removed work shall be replaced by craftsmen who regularly install the types of work being replaced.

M. Excavation in Vicinity of Trees:

1. All trees, including low hanging limbs within the immediate area of construction, shall be adequately protected to a height of at least 5' to prevent damage from the construction operations and/or equipment. All excavation within the outermost limb radius of all trees shall be accomplished with extreme care. All roots located within this outermost limb radius shall be brought to the attention of the Engineer before they are cut or damaged in any way. The Engineer will give immediate instructions for the disposition of same. All stumps and roots encountered in the excavation that are not within the outermost limb radius of existing trees shall be cut back to a distance of not less than 18" from the outside of any concrete structure or pipeline. No chips, parts of stumps, or loose rock shall be left in the excavation. Where stumps and roots have been cut out of the excavation, clean, compacted, dry bank sand shall be backfilled and tamped.

3.6 FLAMESPREAD PROPERTIES OF MATERIALS

A. Materials and adhesives incorporated in this project shall conform to NFPA Standard 255, “Method of Test of Surface Burning Characteristics of Building Materials”. The classification shall not exceed a flame spread rating of 25 for all materials, adhesives, finishes, etc. specified for each system; and shall not exceed a smoke-developed rating of 50.

3.7 PENETRATION FLASHING AND SEALS

A. Conduit sleeves, pitch pockets, and flashings compatible with the roofing and waterproofing installation shall be provided for all roof and wall penetrations and roof-mounted equipment and supports. Coordinate flashing details with the Architectural details and the roofing/waterproofing contractors.

B. Conduits passing through walls where exposed to weather or below grade shall pass through water-stop sleeves (new construction) or core-drilled openings (existing construction). The space between the conduit and sleeve/opening shall be sealed using segmented annular seals to prevent the entry of water or foreign materials. Segmented annular seals shall be Thunderline Incorporated; Type LS Series, Style C insulating type link seals for temperatures up to 250 degrees Fahrenheit, or approved equal. Water-stop sleeves shall be Thunderline Corporation, Century-Line or equal non-corroding thermoplastic sleeves with a molded in water stop.

3.8 CLEANING AND PAINTING OF ELECTRICAL WORK

A. Prime, protective touch-up painting is included in the Work of this Division. Finish painting in equipment spaces, concealed locations, and other locations not exposed to the view of building occupants is included in the work of this Division. Finished painting in areas exposed to the view of building occupants is specified under Division 9.

B. All equipment and materials furnished by the electrical subcontractor shall be delivered to the job with suitable factory finish.

C. Electrical switchgear, disconnect switches, contactors, etc., with suitable factory-applied finishes shall not be repainted; except for aesthetic reasons where located in finished areas

as directed by the Engineer and in a color selected by the Engineer. Where factory-applied finishes are damaged in transit, storage or installation; or before final acceptance, they shall be restored to factory-fresh condition by competent refinishers using the spray process.

D. All equipment not finished at the factory shall be given a prime coat and then finish painted with two coats of enamel in color as directed by the Engineer. No nameplates on equipment shall be painted, and suitable protection shall be afforded such plates to prevent their being rendered illegible during the painting operations.

E. The surfaces finish-painted shall first be prepared as follows:

1. Galvanized and black steel surfaces shall first be painted with one coat of galvanized metal primer.
2. Aluminum surfaces shall first be painted with one coat of zinc chromate primer.

F. All ferrous metal surfaces without protective finish and not galvanized, in exposed and concealed areas including chases, under floor and above ceilings, shall be painted with two coats of zinc chromate primer as the construction progresses to protect against deterioration.

G. Before painting, all surfaces to be painted shall be suitably prepared. This shall include removing all oil, rust, scale, dirt, and other foreign material. Surfaces shall be made smooth by grinding, filing, brushing, or other approved method. In the painting operations, the primer for metal surfaces shall be of the zinc dust type unless specified otherwise, and where finish painting is specified, it shall be painted using materials and colors selected and approved by the Engineer. Refer to Division 9 for additional requirements.

3.9 WARNING SIGNS AND OPERATIONAL TAGS

A. Warning Signs: Provide warning signs where there is hazardous exposure associated with access to or operation of electrical facilities. Provide text of sufficient clarity and lettering of sufficient size to convey adequate information at each location; mount permanently in an appropriate and effective location. Comply with recognized industry standards for color and design.

B. Operational Tags: Where needed for proper and adequate information on operation and maintenance of electrical systems, provide tags of plasticized card stock, either preprinted or hand printed.

3.10 WIRING DEVICE AND EQUIPMENT MOUNTING HEIGHTS

A. In general, unless noted otherwise on Architectural or Electrical Drawings, mounting heights to device centerline shall be as:

Wall Switches	48" above finished floor.
Receptacles	18” above finished floor.
Panelboards	72" from finish floor to top of panel board.

B. All receptacles shall be mounted with their long axis vertical, unless noted otherwise.

3.11 DEMOLITION AND WORK AT EXISTING SITE

A. The Contractor shall be responsible for loss or damage to the existing facilities caused by him and his workmen, and shall be responsible for repairing or replacing such loss or damage. The Contractor shall send proper notices, make necessary arrangements, and perform other services required for the care, protection, and in-service maintenance of all electrical services for the new and existing facilities. The Contractor shall erect temporary barricades, with necessary safety devices, as required to protect personnel from injury, removing all such temporary protection upon completion of the work.

B. The Contractor shall provide temporary or new services to all existing facilities as required to maintain their proper operation when normal services are disrupted as a result of the work being accomplished under this project.

C. Where existing construction is removed to provide working and extension access to existing utilities, Contractor shall remove doors, conduit, outlet boxes, wiring, light fixtures, equipment, and similar items, to provide this access and shall reinstall same upon completion of work in the areas affected.

D. Outages of services as required by the new installation will be permitted but only at a time approved by the Owner. The Contractor shall allow the Owner 2 weeks in order to schedule required outages. The time allowed for Outages will not be during normal working hours, unless otherwise approved by the Owner. All costs of outages, including overtime charges, shall be included in the contract amount.

E. The Contractor shall modify, remove, and/or relocate all materials and items so indicated on the Drawings or required by the installation of new facilities. All removals and/or dismantling shall be conducted in a manner as to produce maximum salvage. Survey the project with the Owners representative before demolition begins and determine all materials that the Owner specifically chooses to have salvaged. Pre-establish with the Owner locations where salvaged materials are to be stored. Salvage materials shall remain the property of the Owner, and shall be delivered to such destination as directed by the Owner. Materials and/or items scheduled for relocation and which are damaged during dismantling or reassembly operations shall be repaired and restored to good operative condition. The Contractor may, at his discretion and upon the approval of the Owner, substitute new materials and/or items of like design and quality in lieu of materials and/or items to be relocated.

F. All items which are to be relocated shall be carefully removed in reverse to original assembly or placement and protected until relocated. The Contractor shall clean and repair and provide all new materials, fittings, and appurtenances required to complete the relocations and to restore to good operative order. All relocations shall be performed by workmen skilled in the work and in accordance with standard practice of the trades involved.

G. When items scheduled for relocation are found to be in damaged condition before work has been started on dismantling, the Contractor shall call the attention of the Owner to such items and receive further instructions before removal. Items damaged in repositioning operations are the Contractor's responsibility and shall be repaired or replaced by the Contractor as approved by the Owner, at no additional cost to the Owner.

H. Service lines and wiring to items to be removed, salvaged, or relocated shall be removed to points indicated on the Drawings, specified, or acceptable to the Owner. Service lines and wiring not scheduled for reuse shall be removed to the points at which reuse is to be continued or service is to remain. Such services shall be sealed, capped, or otherwise tied-off or disconnected in a safe manner acceptable to the Owner. All disconnections or connections into the existing facilities shall be done in such a manner as to result in minimum interruption of services to adjacent occupied areas. Services to existing areas or facilities which must remain in operation during the construction period shall not be interrupted without prior specific approval of the Owner as hereinbefore specified.

I. Certain work during the demolition and alteration phases of construction may require overtime or nighttime shifts or temporarily evacuation of the occupants. Coordinate and schedule all proposed down time with tile Owner's Representative at least 72 hours in advance.

J. Make every effort to minimize damage to the existing Owner's property. Repair, patch, or replace as required any damaged which might occur as a result of work at the site. Care shall be taken to minimize interference with the Owner's activities during construction. Cooperate with the Owner and other trades in scheduling and performance of the work.

K. Include in the contract price all rerouting of existing conduits, wiring, outlet boxes, fixtures, etc., and the reconnecting of existing fixtures as necessitated by field conditions to allow the installation of the new systems. Furnish all temporary conduit, wiring boxes, etc., as required to maintain lighting and power service for the existing areas with a minimum of interruption.

L. All existing lighting fixtures, switches, outlets, materials, equipment and appurtenances not included in the remodel or alteration areas are to remain in place and shall remain in service.

M. Electrical equipment, outlets, circuits to mechanical and building systems equipment, etc., which are to remain but which are' served by conduit and/or circuiting that is disturbed by the remodeling work, shall be reconnected in such a manner as to leave it in proper operating condition.

N. Existing branch circuit wiring which is to be removed, shall be pulled from the raceways and the empty conduit shall be removed to a point of permanent concealment

O. New circuiting indicated to be connected to existing panels shall be connected to "spares" and/or "released" breakers as applicable, or new breakers provided where space is available. Contractor shall verify the existing panel load and feeder capacity prior to adding any additional loads.

P. Any salvageable equipment as determined by the Owner, shall be delivered to the Owner, and placed in storage at the location of his choice. All other debris shall be removed from the site immediately.

END OF SECTION

SECTION 26 01 26
ELECTRICAL TESTING

PART 1 GENERAL

1.1 SECTION INCLUDES

A. Material and installation requirements for:
   1. Testing of electrical systems

1.2 DESCRIPTION OF WORK

A. Provide testing of electrical work installed under Division 26, as specified herein and in other Division 26 sections. Feeders and equipment shall not be placed in service until they have been checked and tested, as applicable.

1.3 RELATED SECTIONS

A. Related Sections include but are not necessarily limited to:
   1. Section 26 00 00 – Electrical General Provisions
   2. Section 26 00 01 – Electrical Scope of Work
   3. Section 26 05 19 – Wire and Cable
   4. Section 26 05 26 – Grounding
   5. Section 26 25 16 – Panelboards
   6. Section 26 27 26 – Wiring Devices
   7. Section 26 28 16 – Safety and Disconnect Switches
   8. Section 26 28 00 – Overcurrent Protective Devices
   9. Section 26 29 13 – Enclosed Controllers
   10. Section 26 70 00 – Motors
   11. Section 26 90 21 – Control System
   12. Section 26 90 22 – Pump Control Panel
   13. Section 26 90 25 – Control Components

1.4 STANDARDS AND REFERENCES

A. All materials and equipment specified herein shall, within the scope of UL Examination Services, be approved by the Underwriter's Laboratories for the purpose for which they are used and shall bear the UL label.

B. All materials and equipment specified herein shall conform with all applicable NEMA, ANSI and IEEE Standards

C. All materials and equipment specified herein and their installation methods shall conform to the latest published version of the National Electrical Code, NEC.

1.5 SUBMITTALS

A. Shop Drawings
   1. See Section 26 00 00.

B. Testing Procedures: Submit proposed testing procedures to the Engineer for review at least 10 working days prior to conducting any testing on the project.

C. Reporting Forms: Submit proposed forms to be used in recording testing data and results to the Engineer for review at least 10 working days prior to conducting any testing on the project.

D. Calibration List: Submit a listing of testing devices to be used for the project to the Engineer for approval. Listing shall include documentation that the devices are properly calibrated.

E. Test Log: The Contractor shall maintain a test log at the site to document the results of all successful and unsuccessful testing as it is performed. This log shall be available for review by the Engineer and a copy of the log shall be submitted to the Engineer prior to the Substantial Completion inspection. A space shall be provided on the test log signoff by the Engineer or Owners representative.

F. Test Data and Results: Submit complete data and certified test results for each test performed, including, but not limited to:

1. Test performed,
2. Test procedure,
3. System and area tested,
4. Date(s) and time(s) of test,
5. Weather conditions,
6. Test criteria,
7. Test results,
8. Additional pertinent information.

G. Testing Certification: Certifications stating that submitted test data and results are true and correct shall be provided for all submittals under this section. Certification shall be executed by an authorized officer if the Contractor is a corporation, by a partner if the Contractor is a partnership, by the owner if the Contractor is a sole proprietorship or by the authorized representative if the Contractor is a joint venture.

H. Operational Certification: For Packaged, Vendor Supplied, Custom Engineered, systems or equipment submit an operational certification which documents that all equipment and systems have been fully tested to verify proper operation in accordance with the design shown in the Contract documents and manufacturer's recommendations.

1.6 NOTICE

A. Notify the Engineer in writing 10 working days prior to all scheduled testing to allow time for Engineer to schedule witnessing of testing, where elected by Engineer.

PART 2 PRODUCTS

2.1 TESTING MATERIALS

A. General: Provide all materials and test equipment required for testing of specified electrical systems, including re-testing until acceptable results are obtained.

B. Products: Tested products which fail to provide acceptable test results shall be repaired or replaced with suitable materials as required to obtain acceptable results.

PART 3 EXECUTION

3.1 TESTING

A. General: Tests shall be made during the course of the construction as specified and as required by authorities having jurisdiction. Such test shall be conducted by this Division as part of the Work and shall include all personnel, material, and equipment required to perform test until satisfactory results are obtained. Any defects detected during testing shall be satisfactorily repaired or the equipment involved shall be replaced and the test re-executed.

B. Testing shall include but not be limited to all items in other Sections of this Division and the following:
   1. Feeders: Refer to Section 26 05 19.
   2. Ground Rods: Refer to Section 26 05 26.
   3. Motors: Refer to Section 26 70 00.
   4. Control System: Refer to Section 26 90 21.
   5. Instrumentation and Control Components: Refer to Section 26 90 25.

C. Test Reports (Attached)
   1. ELECTRICAL SYSTEM TEST REPORT - 600V CABLE
   2. ELECTRICAL GROUND ROD TEST REPORT
   3. MOTOR TEST REPORT
   4. TRANSMITTER CALIBRATION / TEST DATA FORM
   5. INDICATOR / RECORDER CALIBRATION TEST DATA FORM

END OF SECTION

26 01 26 ELECTRICAL SYSTEM TEST REPORT - 600V CABLE

ELECTRICAL SYSTEM
DESCRIPTION DATA

SERVICE DESCRIPTION:
nominal voltage, phase to phase
phase to neutral - single or three phase-
number of conductors _____

SERVICE CONDUCTORS:
phase size and insulation type _____
neutral size and insulation type _____
ground size and insulation type _____

SERVICE DISCONNECT DESCRIPTION:
circuit breaker or disconnect switch _____
size (amps) _____
fuse (amps) _____

MEASURED CONDITIONS		DATA		
Operating Load Voltage	Volts	Vab_____	Vbc_____	Vca_____
		Van_____	Vbn_____	Vcn_____
Operating Load Feeder Current	Amps	Ia_____	Ib_____	Ic_____
Conductor Insulation Resistance - record the measurement for each set of conductors in a single raceway for the following circuits:	Megohms	a-b_____	b-c_____	c-a_____
	Megohms	a-g_____	b-g_____	c-g_____

1. Pump Station Feeders

26 01 26 - ELECTRICAL GROUND ROD TEST REPORT

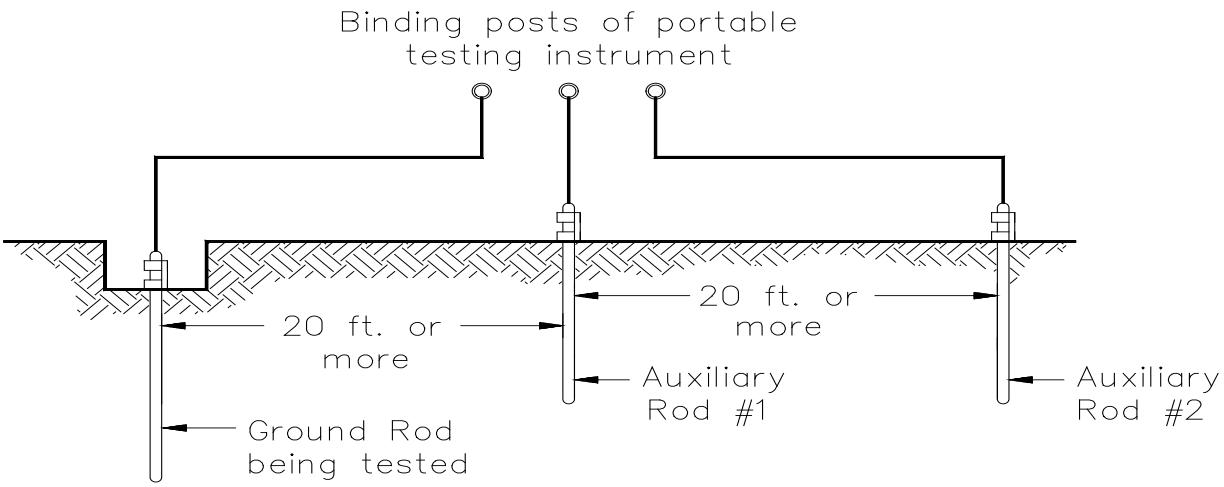

GROUND ROD RESISTANCE TESTING

PROCEDURE:
To measure ground resistance, two additional temporary grounds, consisting of short rods 2 or 3 feet long, shall be driven in the ground at least 20 feet away from the rod being tested. A direct-reading ground resistance tester shall then be connected to the three ground rods by means of insulated leads. The battery operated ground resistance tester reads the resistance of the ground rod being tested directly in ohms. The ground rod location / designation and its measured ohm value shall be recorded in chart below.

GROUND ROD LOCATION / DESIGNATION	OHM VALUE
1.	*
2.	*
3.	*
COMPOSITE GROUND	*

*Ohm value of a single ground rod shall not exceed 25 Ohms. If additional ground rod(s) are added, the "composite" ground electrode shall have a maximum acceptable reading of 15 Ohms which shall be recorded in chart above.

26 01 26 - MOTOR DATA AND TEST REPORT

EQUIPMENT NAME AND NUMBER: _____

EQUIPMENT SPECIFICATION SECTION: _____

MOTOR STARTER LOCATION _____

CONTRACTORS REPRESENTATIVE _____ DATE _____

MOTOR NAMEPLATE DATA

MFR Name/Model No. _____
Voltage/Phase/HP _____
FLA/LRA _____
Service Factor _____
Efficiency Index (or percent) _____
NEMA Design _____
Code Letter _____
Insulation Type _____
Temperature Rise _____
Ambient Temperature _____
RPM _____
Enclosure _____
Thermal Trip Setting _____
Space HTR: Watts/Volts _____
Other Data _____

MOTOR STARTER INFORMATION
Manufacturer/Type _____
Overload Heater No _____

* RECORDED FULL LOAD DATA	VOLTS	A-G_____	B-G_____	C-G_____
FULL LOAD OPERATING VOLTAGE	VOLTS	A-B_____	B-C_____	C-A_____
FULL LOAD OPERATING CURRENT	AMPS	A_____	B_____	C_____
INSULATION RESISTANCE (deenergized)	MEGOHMS	A-G_____	B-G_____	C-G_____
MOTOR CIRCUIT RESISTANCE	OHMS	A-B_____	B-C_____	C-A_____

*VOLTAGE & CURRENT READINGS SHALL BE TAKEN AT THE CLOSEST ACCESSIBLE POINT TO THE LOAD

26 01 26 - TRANSMITTER CALIBRATION / TEST DATA FORM

Tag. No. and/or Description:_____ Serial No._____

Make and Model No.:_____

Associated Panel: _____

Type of testing equipment used: _____

Input: _____

Output: _____

Range: _____ Scale: _____

Calibrated Value (flow/pressure/turbidity etc.) at 4mA _____

Calibrated Value (flow/pressure/turbidity etc.) at 20mA _____

Simulate process variable (flow, pressure, turbidity, etc.) and measure output with appropriate meter. Related value is (example: the level associated with the pressure).

% Range	Input (engr. units)	Related value	Expected Output	Actual Output
0	_____	_____	_____	_____
25	_____	_____	_____	_____
50	_____	_____	_____	_____
75	_____	_____	_____	_____
100	_____	_____	_____	_____

COMMENTS:

TESTED BY_____ DATE:_____

OWNERS REPRESENTATIVE _____ DATE:_____

26 01 26 - INDICATOR / RECORDER CALIBRATION TEST DATA FORM

Tag. No. and/or Description:_____ Serial No._____

Make and Model No.:_____

Associated Panel: _____

Input: _____

Output: _____

Range: _____ Scale: _____

Calibrated Value (flow/pressure/turbidity etc.) at 4mA _____

Calibrated Value (flow/pressure/turbidity etc.) at 20mA _____

Simulate process variable (flow, pressure, turbidity, etc.) and measure output with appropriate meter. Related value is (example: the level associated with the pressure).

% Range	Input (engr. units)	Related value	Expected Output	Actual Output
0	_____	_____	_____	_____
25	_____	_____	_____	_____
50	_____	_____	_____	_____
75	_____	_____	_____	_____
100	_____	_____	_____	_____

For level indicators, enter elevation of 4mA here _____

COMMENTS:

TESTED BY _____ DATE: _____

OWNERS REPRESENTATIVE _____ DATE: _____

SECTION 26 05 19
WIRE AND CABLE

PART 1 GENERAL

1.1 SECTION INCLUDES

A. Material and installation requirements for:
   1. Building wire
   2. Power and control cable
   3. Instrumentation and data cable
   4. Wire connectors
   5. Insulating tape
   6. Pulling lubricant

1.2 DESCRIPTION OF WORK

A. Provide electrical wiring and connections as shown, scheduled, indicated, and specified.

B. All wiring shall be in raceways.

1.3 RELATED SECTIONS

A. Related Sections include but are not necessarily limited to:
   1. Section 26 00 00 – Electrical General Provisions
   2. Section 26 00 01 – Electrical Scope of Work
   3. Section 26 00 02 – Basic Materials and Methods
   4. Section 26 01 26 – Electrical Testing
   5. Section 26 05 19 – Wire and Cable
   6. Section 26 05 26 – Grounding
   7. Section 26 05 33 – Raceways
   8. Section 26 25 16 – Panelboards
   9. Section 26 27 26 – Wiring Devices
   10. Section 26 70 00 – Motors
   11. Section 26 90 21 – Control System
   12. Section 26 90 22 – Pump Control Panel
   13. Section 26 90 25 – Control Components

1.4 STANDARDS AND REFERENCES

A. All materials and equipment specified herein shall, within the scope of UL Examination Services, be approved by the Underwriter's Laboratories for the purpose for which they are used and shall bear the UL label.

B. Products shall be designed, manufactured, tested, and installed in compliance with the following standards:
   1. Insulated Cable Engineers Association:
      a) S-58-679, Control Cable Conductor Identification
   2. Institute of Electrical and Electronic Engineers (IEEE):

a) 518, Guide for the Installation of Electrical Equipment to Minimize Electrical Noise Inputs to Controllers from External Sources

3. National Electrical Manufacturers Association (NEMA):
   a) ICS 4, Terminal Blocks for Industrial Use
4. National Electrical Manufacturers Association/Insulated Cable Engineers Association (NEMA/ICEA):
   a) WC 70/ICEA S-95-658, Standard for Nonshielded Power Cables Rated 2000 Volts or Less for the Distribution of Electrical Energy
5. National Fire Protection Association (NFPA):
   a) 70, National Electrical Code (NEC)
   b) 262, Method of Test for Fire and Smoke Characteristics of Wires and Cables.
6. Underwriters Laboratories, Inc. (UL):
   a) 13, Power-Limited Circuit Cables
   b) 44, Thermoset-Insulated Wires and Cables
   c) 83, Thermoplastic-Insulated Wires and Cables
   d) 467, Grounding and Bonding Equipment
   e) 486A, Wire Connectors and Soldering Lugs for use with Copper Conductors
   f) 486C, Splicing Wire Connectors
   g) 510, Insulating Tape
   h) 1581, Reference Standard for Electrical Wires, Cables, and Flexible Cords

C. All materials and equipment specified herein and their installation methods shall conform to the latest published version of the National Electrical Code, NEC.

1.5 DEFINITIONS

A. Cable: Multi-conductor, insulated, with outer sheath containing either building wire or instrumentation wire.

B. Instrumentation Cable: Multiple conductor, insulated, twisted or untwisted, with outer sheath. The following are specific types of instrumentation cables:
   1. Analog signal cable: Used for the transmission of low current (e.g., 4-20mA DC) or low voltage (e.g., 0-10 V DC) signals, using No. 16 AWG and smaller conductors. Commonly used types are defined in the following:
      a) UTP: Unshielded twisted pair,
      b) TSP: Twisted shielded pair, (or STP: Shielded twisted pair),
      c) TST: Twisted shielded triad.
   2. Digital signal cable: Used for the transmission of digital signals between computers, PLC's, RTU's, etc.

C. Power Cable: Multi-conductor, insulated, with outer sheath containing building wire, AWG No. 8 and larger.

D. Control Cable: Multi-conductor, insulated, with outer sheath containing building wires, AWG No. 16, AWG No. 14, AWG No. 12 or AWG No. 10.

E. Building Wire: Single conductor, insulated, with or without outer jacket depending upon type.

1.6 SUBMITTALS

A. Shop Drawings
   1. See Section 26 60 00.

PART 2 PRODUCTS

2.1 CONDUCTORS

A. Conductors shall be stranded copper. Sizes AWG No. 14, 12 and 10 for general purpose lighting and receptacle wiring and all wiring within circuit breaker panels may be solid. All other conductors shall be stranded. Insulation shall be THW-2, THWN-2, or THHN, (90˚F) chosen to satisfy environmental conditions. Conductors used for power circuits shall not be smaller than AWG No. 12. Control conductors may be AWG No. 14.

2.2 CONNECTORS

A. Ideal Industries “Wing Nut” or 3M Company “SCOTCHLOCK” pre-insulated connectors may be used for lighting and receptacle circuits for splices and taps in conductors AWG No. 10 and smaller. For AWG No. 8 and larger conductors, utilize Thomas & Betts compression connectors. Compress using recommended die and tools.

B. For connections of wire to cord to removable equipment provided with integral cords (such as floats, transducers, etc.) provide junction box with terminals and coat with liquid insulation.

C. For connections of wire to cord for submersible motors of all size wire use a water proof motor stub insulator: Thomas & Betts multi splice insulator MSLT112-4 or equal.

2.3 SPLICE INSULATION

A. Splice insulation shall be equal to the conductor utilized.

B. Insulate all permanent splices that are underground or in damp or corrosive environments with cast epoxy type insulation which covers the jacket of all cords and the insulation on all wire. Epoxy splice shall be Scotch #3570 or equal.

2.4 SHIELDED SIGNAL CABLE

A. Signal conductor cable shall be AWG No. 16 individually twisted, shielded pairs, BELDEN #8719, or equal. Conductors shall be tinned copper with color coded 90° C PVC insulation and individual conductor jacket of nylon. Shielding shall be aluminum polyester 100% shield coverage with drain wire. The cable shall have an overall PVC jacket. The insulation system shall be rated for 300V.

B. For applications where 600V insulation is required, 600V insulated signal wire shall only be used where required by Code. BELDEN 1120A or equal.

2.5 DATA COMMUNICATIONS CABLE (UTP)

A. Data communications cable shall be four pair unshielded twisted pair, AWG No. 24 copper. Cable shall be enhanced EIA/TIA category 5 cable.

B. Cable shall be used for short haul applications of 100 meters or less between devices, unless approved by Engineer.

C. Acceptable Manufacturers:

	APPLICATION	
Manufacturer:	Non-Plenum:	Plenum:
Commspec	#5504	#44N4
Belden “Data Twist”	#350	-
AT & T	#2061	#1061

2.6 MOTOR TERMINAL SPLICE INSULATION

A. Provide motor terminal splice insulation in the motor connection box that will withstand constant vibration and abrasion without degrading the insulation of the splice. A product shall be used that is specifically designed for the purpose of motor terminations.

1. For motor splices in general purpose areas use a bolted splice with a TY-RAP boot type insulator, Thomas & Betts splice insulator series MSC. For splices using wire larger than AWG No. 8 it is also acceptable to use a heat shrinkable motor connection stub splices, RAYCHEM, MCK-V series or equal.
2. For motors in outdoor, damp, or corrosive environments, use a water proof motor stub insulator, Thomas & Betts multi splice insulator MSLT112-4 or equal. For splices using wire larger than AWG No. 8 it is also acceptable to use a heat shrinkable motor connection stub splices, RAYCHEM, MCK-V series or equal.

PART 3 EXECUTION

3.1 GENERAL

A. Splicing of power and control and signal wires or cables is not allowed. All wire transitions shall be done on terminals.

B. Keep all conductors within the allowable tension limits during installation. Lubricants for wire pulling, if used, shall be approved for the insulation and raceway material. Observe cable manufacturer's and industry standard cable bending radius recommendations.

C. Incoming conductors in panelboards, control panels, motor control centers, etc., AWG No. 6 and smaller, shall be bundled and laced at intervals not greater than 6 inches and neatly spread into trees and connected to their respective terminals.

D. Sufficient slack shall be allowed in conductors for alterations in terminal connections. Lacing shall be done with plastic cable ties using a tensioning tool designed for that purpose.

E. Conductors crossing hinges shall be made up into groups not exceeding twelve and shall be so arranged that they will be protected from chafing when the hinged member is moved.

F. Conductors installed in handholes shall be bundled and neatly racked to the side of the handhole. All splices (if allowed) shall be a minimum of 6 inches above the bottom of the handhole.

3.2 WIRE AND CABLE TERMINATION

A. Power conductors, AWG No. 8 and larger may be terminated directly in box-type lugs.

B. Solid conductors (when allowed for lighting and receptacle circuits) of AWG No. 10 and AWG No. 12 may be directly terminated to screw terminals.

C. For any power, control, or signal wire terminating on screw type terminals; provide spade or ring tongue type terminations.

D. Stranded control conductors may be directly terminated in box type terminals at control panels. Insulated terminals shall be used also on all stranded instrumentation wiring.

E. Special instrumentation cables shall be terminated in accordance with the recommendations of the manufacturer of the equipment and subject to review by the Engineer.

F. No splices shall be used in power, control and/or signal wiring. The wiring shall be continuous from point-to-point.

G. Existing wiring must be removed and replaced with new.

H. Terminals and connectors shall be installed with the compression tool recommended by the terminal manufacturer. Solid wire shall not be lugged, but shall be terminated with a full ring eye of the wire under the binding-head screw or saddle of the terminal block. Electrical spring connectors may be used only on lighting circuits.

3.3 COLOR CODING

A. Wiring shall conform to the following color code.

B. Insulation on phase conductor sizes AWG No. 10 and smaller shall be colored, No.8 AWG and larger may have black insulation with plastic tape of the appropriate color from the table below.

C. Insulation on the grounded conductor (neutral) sizes AWG No. 8 and smaller shall be colored, AWG No. 6 and larger may have black insulation with plastic tape of white or gray in accordance with the table below.

Description	120/208/240V	277/480V	Control
Phase A (Left)	Black	Brown	--
Phase B (Center)	Red	Orange	--
Phase C (Right)	Blue	Yellow	--
Neutral	White	Gray	White
Ground	Green	Green	Green
120 VAC Control	--	--	Red
120 VAC Control	Neutral	--	White
DC Control (+)	--	--	Blue
DC Control (-)	--	--	Gray
External Source	--	--	Yellow

D. All control wiring in control panels or other enclosures that is powered from an external source and is not disconnected by the control panel disconnect shall be terminated at a disconnecting terminal block upon entering the enclosure. The color of the wire shall then be changed to yellow to identify it as being powered from an external source. Provide identification nameplate on exterior of enclosure to indicate sources of external power.

3.4 TERMINAL MARKING

A. All terminals in instrument and relay enclosures, motor control centers, control panels, instrument panels, field panels and control stations, as well as connections to mechanical equipment, shall have reference number and letter in accordance to the following:

1. h = Control power hot (usually 120V or 24V)
2. n = neutral
3. g = ground
4. x = PLC input (number shall correspond to the program input number)
5. y = PLC output (number shall correspond to the program output number)
6. ax = PLC signal/analog input (number shall correspond to the program input number)
7. ay = PLC signal/analog output (number shall correspond to the program output number)
8. c = control (use if none of the above letters apply)
9. p = power (usually 480V)

10. s = signal (usually 4-20ma or 1-5V) (use if none of the above letters apply)
11. B = DC + and -

3.5 CONDUCTOR SPACING

A. Unless specifically shown otherwise on the Drawings, in all areas maintain a minimum 2-inch separation between all conductors of different voltages. For parallel runs over 6 feet maintain the following minimum separation between conductors:

1. Signal (12/24) VDC and 120 VAC	6 inches
2. Signal (12/24) VDC and 480 VAC	12 inches
3. 120 VAC control wire and 480 VAC	2 inches

3.6 WIRE BENDING RADIUS

A. The radius of bends in all wire (conductors and cables) shall not be less than five (5) times the outside diameter of the wire. Any wire installed with bends less than five times the diameter which the Engineer deems has caused that insulation to be damaged shall be removed and new wire shall be installed.

3.7 VISUAL AND MECHANICAL INSPECTIONS

A. Inspect exposed section for physical damage.

B. Verify that cable is supplied and connected in accordance with Drawings and Specifications, and that phases are labeled correctly.

3.8 TESTING

A. See Section 26 01 26 – Electrical Testing.

END OF SECTION

SECTION 26 05 26
GROUNDING

PART 1 GENERAL

1.1 SECTION INCLUDES

A. Material and installation requirements for:
   1. Grounding

1.2 DESCRIPTION OF WORK

A. This section covers furnishing and installing all grounding and/or bonding conductors, connectors, ground rods and terminations as required to meet these specifications and to comply with Article 250 of the National Electric Code.

1.3 RELATED SECTIONS

A. Related Sections include but are not necessarily limited to:
   1. Section 26 00 00 – Electrical General Provisions
   2. Section 26 00 01 – Electrical Scope of Work
   3. Section 26 00 02 – Basic Materials and Methods
   4. Section 26 01 26 – Electrical Testing
   5. Section 26 05 19 – Wire and Cable
   6. Section 26 05 33 – Raceways
   7. Section 26 25 16 – Panelboards
   8. Section 26 27 26 – Wiring Devices
   9. Section 26 28 16 – Safety and Disconnect Switches
   10. Section 26 28 00 – Overcurrent Protective Devices
   11. Section 26 29 13 – Enclosed Controllers
   12. Section 26 70 00 – Motors
   13. Section 26 90 21 – Control System
   14. Section 26 90 22 – Pump Control Panel
   15. Section 26 90 25 – Control Components

1.4 STANDARDS AND REFERENCES

A. All materials and equipment specified herein shall, within the scope of UL Examination Services, be approved by the Underwriter's Laboratories for the purpose for which they are used and shall bear the UL label.

B. Products shall be designed, manufactured, tested, and installed in compliance with the following standards:
   1. American National Standards Institute:
      a) ANSI/IEEE Standard 142 Recommended Practice for Grounding of Industrial and Commercial Power Systems.
   2. American Society for Testing and Materials (ASTM):
      a) B8, Standard Specification for Concentric-Lay-Stranded Copper Conductors, Hard, Medium-Hard, or Soft.
   3. National Fire Protection Association (NFPA):

a) 70, National Electrical Code (NEC).

4. Underwriters Laboratories, Inc. (UL):
   a) 467, Electrical Grounding and Bonding Equipment.

C. All materials and equipment specified herein and their installation methods shall conform to the latest published version of the National Electrical Code, NEC.

1.5 SUBMITTALS

A. Shop Drawings
   1. See Section 26 00 00.
   2. See Section 26 01 26.
      a) After installation is complete:
         - Ground rod and system test results

1.6 DELIVERY, STORAGE, AND HANDLING

A. See Section 26 00 00.

PART 2 PRODUCTS

2.1 GENERAL

A. For each electrical grounding connection, provide a complete assembly of materials to construct a completely grounded electrical system.

B. Raceways for grounding conductors shall be as specified in Section 26 05 19.

C. Grounding cable, wire and connectors shall be as specified in Section 26 05 33.

D. Grounding conductors and jumpers shall be connected to each other and to items to be grounded by means of approved type pressure connectors, clamps, and other suitable methods approved by the Engineer. No solder connections shall be made.

2.2 GROUNDING ELECTRODE CONDUCTORS

A. All concrete encased or direct buried underground grounding electrode conductors shall be soft drawn stranded bare copper cable, conforming to ASTM B8.
   1. Sized as required by Table 250-66 of the NEC, except where a larger size conductor is shown on the Contract Drawings.

B. Equipment grounding conductor:
   1. Green copper conductor: Identical insulation to phase conductors.
   2. Sized as required by Table 250-122 of the NEC, except where a larger size conductor is shown on the Contract Drawings.

2.3 GROUND ROD BOXES

A. Provide ground rod boxes for each ground rod. Ground rod boxes shall be concrete with traffic rate covers, Fogtite SP-1, or approved equal.

2.4 GROUNDING ELECTRODE RODS

A. Grounding electrode rods used shall be a minimum of ¾" diameter by 10' long, steel core and thick copper jacket (copperclad).

B. Heavy uniform coating of electrolytic copper molecularly bonded to a rigid steel core. Corrosion resistant bond between the copper and steel. Hard drawn for a scar-resistant surface. UL listed.
   1. Blackburn
   2. Thomas & Betts

2.5 GROUND CLAMPS

A. Ground clamps for connecting grounding conductors to copper, brass, or lead pipes shall be made of copper. If pipes are of steel or iron, the ground clamps should be made of galvanized iron. These clamps shall be designed to provide permanent and positive pressure and to avoid mechanical injury to the pipe. Use exothermic welds for connecting ground wires to ground rods for all below grade counterpoise grounds, grids, and elsewhere where noted on the Drawings.

B. High copper alloy content, compression type, noncorrosive.

C. UL 467 listed.
   1. Burndy
   2. ILSCO
   3. Thomas & Betts

PART 3 EXECUTION

3.1 INSTALLATION

A. Install products in accordance with manufacturer's instructions.

B. Remove paint, rust, or other nonconducting material from contact surfaces before making ground connections.

C. Where ground conductors pass through floor slabs or building walls, sleeves of intermediate metal conduit of the required size, shape, and length shall be provided, unless otherwise specified or shown on Drawings.

D. Grounding System
   1. Locate ground rods at approximate locations shown on Drawings.
   2. Install rods in firm soil outside of excavated areas.
   3. Drive top of rod to minimum depth of 6 IN below finished grade unless otherwise noted on Contract Drawings.
   4. Use driving studs or other suitable means to prevent damage to threaded ends of sectional rods.
   5. Interconnect all ground rods with grounding electrode conductor:
   6. Size per the NEC unless a larger size is shown on the Drawings.
   7. Do not splice grounding electrode conductor.
   8. Provide excavation required for installation of ground conductors buried in earth.
   9. Allow sufficient slack to prevent conductor breakage during backfill or due to ground movement.
   10. Leave taps, junctions, and splices uncovered until inspected by Engineer.
   11. Backfill around grounding system completely, thoroughly tamping to provide good contact between backfill materials and ground rods and conductors.

12. Bond underground metal piping to the grounding system in accordance with NEC 250. Grounding clamps may be utilized on piping if exothermic welds may damage structural integrity.

E. Complete system resistance:

1. 15 Ohms or less.

3.2 RACEWAY GROUNDING - CONDUIT

A. All metallic conduit shall be electrically continuous.

B. Provide grounding-type insulating bushings:

1. For all equipment not supplied with a conduit hub.

C. Bond all conduit, at entrance and exit of equipment, to equipment ground bus or ground lug.

D. Use manufactured conduit hubs at all panels.

E. Provide bonding jumpers if conduit are installed in concentric knockouts.

F. Make all metallic raceway fittings and grounding clamps tight to ensure equipment grounding system will operate continuously at ground potential to provide low impedance current path for proper operation of overcurrent devices during possible ground fault conditions.

G. Provide bonding jumper from equipment ground lug to RGS conduit if flexible conduit is utilized for equipment connections.

H. Provide bonding jumpers identical in conductor size to the largest ground conductor run within the conduit.

3.3 EQUIPMENT GROUNDING

A. Ground all voltage levels at the supply transformer from the secondary neutral to the grounding system.

B. Provide a grounded conductor between the supply transformer and the grounding buses of all supplied equipment.

C. Ground all equipment supplied from distribution equipment through the distribution equipment ground bus. Provide an equipment grounding conductor connected to the ground bus and equipment ground lug.

D. Provide a minimum of two separate grounding electrode conductors for bonding all primary distribution equipment ground buses to the grounding system.

E. Bond equipment fed from other equipment to that equipment.

F. Ground all equipment fed from lighting panels through the lighting panel ground bus. Provide ground conductors for all connections.

G. Consider control devices (switches, indicating lights, meters, starters, relays, etc.) mounted in MCC's, switchgear, control panels, or other metal enclosures to be adequately grounded, if the enclosure ground lug or ground bus is properly grounded.

H. Do not splice grounding conductors.

I. Run all equipment grounding conductors in conduit.

J. Provide separate grounding conductors bonded to the grounding system for all DC equipment.

K. Ground unused and spare power and control cable at both ends.

L. Size all grounding conductors in accordance with Article of the NEC unless larger size is shown on the Drawings.

3.4 STRUCTURAL GROUNDING

A. Bond concrete foundation and floor slab reinforcing steel to the grounding system at all corners of the structure and at locations along the perimeter. Maximum spacing between bonds shall not exceed 25 FT. Utilize a bare 2/0 conductor, unless otherwise shown on Contract Drawings. Do not use exothermic welding if it will damage the structural integrity of the foundation.

B. Make all reinforcing steel electrically continuous.

3.5 TESTING

A. Ground Resistance Test:

1. Test resistance of installed grounding system after backfilling and before connection to any other grounded system including underground piping, utility services or other building ground systems.
2. Test ground grid resistance by fall-of-potential method.
3. The test shall not be performed immediately following wet weather conditions.
4. See Section 26 01 26.

END OF SECTION

SECTION 26 05 33
RACEWAYS

PART 1 GENERAL

1.1 SECTION INCLUDES

A. Material and installation requirements for:
   1. Conduits
   2. Conduit fittings
   3. Conduit supports
   4. Wireways
   5. Outlet boxes
   6. Pull and junction boxes

1.2 DESCRIPTION OF WORK

A. Provide electrical raceway and fitting work as shown, scheduled, indicated, and specified.

B. All electrical conductors shall be installed in conduit or surface metallic raceways. Conduit shall be as specified herein.

C. The types of electrical raceways and fittings required for the project include, but are not limited to, the following.
   1. Rigid metallic conduit (RMC)
   2. PVC-coated rigid steel conduit
   3. Liquidtight flexible metal conduit
   4. Rigid nonmetallic conduit

1.3 RELATED SECTIONS

A. Related Sections include but are not necessarily limited to:
   1. Section 26 00 00 – Electrical General Provisions
   2. Section 26 00 01 – Electrical Scope of Work
   3. Section 26 00 02 – Basic Materials and Methods
   4. Section 26 05 19 – Wire and Cable
   5. Section 26 05 26 – Grounding

1.4 STANDARDS AND REFERENCES

A. All materials and equipment specified herein shall, within the scope of UL Examination Services, be approved by the Underwriter's Laboratories for the purpose for which they are used and shall bear the UL label.

B. Products and installation shall comply with applicable sections of the following standards:
   1. American Iron and Steel Institute (AISI)
   2. American National Standards Institute (ANSI):
      a) C80.1, Rigid Steel Conduit - Zinc-Coated
   3. ASTM International (ASTM):
      a) A123, Standard Specification for. Zinc Coating (Hot-Dip Galvanized) Coatings on Iron and Steel Products

b) A153, Standard Specification for Zinc Coating (Hot-Dip) on Iron and Steel Hardware
c) D1784, Standard Specification for Rigid Polyvinyl Chloride (PVC) Compounds and Chlorinated Polyvinyl Chloride (CPVC) Compounds
d) D2564, Solvent Cements for PVC Plastic Pipe, Tubing, and Fittings
e) E84, Standard Test Method for Surface Burning Characteristics of Building Materials
f) F512, Standard Specification for Smooth-Wall PVC Conduit and Fittings for Underground Installation

4. National Electrical Manufacturers Association (NEMA):
   a) FB 1, Fittings and Supports for Conduit and Cable Assemblies
   b) OS 1, Sheet-Steel Outlet Boxes, Device Boxes, Covers, and Box Supports
   c) RN 1, PVC Externally Coated Galvanized Rigid Steel Conduit and Intermediate Metal Conduit
   d) TC 3, PVC Fittings for Use with Rigid PVC Conduit and Tubing
   e) 250, Enclosures for Electrical Equipment (1000 Volts Maximum)
5. Underwriters Laboratories, Inc. (UL):
   a) 6, Rigid Metal Conduit
   b) 50, Standard for Safety Enclosures for Electrical Equipment
   c) 360, Liquid-Tight Flexible Steel Conduit
   d) 467, Grounding and Bonding Equipment
   e) 514A, Standard for Safety Metallic Outlet Boxes
   f) 514B, Fittings for Cable and Conduit
   g) 651, Schedule 40 and 80 Rigid PVC Conduit
   h) 870, Wireways, Auxiliary Gutters, and Associated Fittings
   i) 886, Outlet Boxes and Fittings for Use in Hazardous (Classified) Locations
   j) 1660, Liquid-Tight Flexible Nonmetallic Conduit

C. All materials and equipment specified herein and their installation methods shall conform to the latest published version of the National Electrical Code, NEC.

1.5 SUBMITTALS

A. Shop Drawings
   1. See Section 26 00 00.

1.6 DELIVERY, STORAGE, AND HANDLING

A. See Section 26 00 00.

PART 2 PRODUCTS

2.1 GENERAL

A. Provide metal conduit, tubing, and fittings of the type, grade, size, and weight (wall thickness) as shown and required for each service. Where type and grade are not indicated, provide proper selection determined by this Section to fulfill the wiring requirements and complying with the NEC for electrical raceways.

B. For each electrical raceway system indicated, provide a complete assembly of conduit, tubing, or duct with fittings, including, but not necessarily limited to, connectors, nipples, couplings, expansion fittings, bushings, locknuts, other components and accessories as needed to form a complete system of the type indicated.

C. Conduit fittings shall be designed and approved for the specific use intended. Conduit fittings, including flexible, shall have insulated throats or bushings. Rigid conduits shall have insulated bushings, except insulated throat grounding bushings shall be used on all conduits without ground conductors and where required by N.E.C. Article 250.

2.2 ACCEPTABLE MANUFACTURERS

A. Provide products complying with these specifications and produced by one of the following:

1. Rigid metallic conduits:
   a) Allied Tube and Conduit Corporation
   b) Triangle PWC Inc.
   c) Western Tube and Conduit Corporation
   d) Wheatland Tube Company
   e) LTV Steel Company
2. Liquidtight Flexible Metal:
   a) AFC
   b) Anaconda Metal Hose
   c) Electri-Flex Company
   d) Flexi-Guard, Inc.
   e) Triangle PWC, Inc.
   f) Wheatland
3. Rigid Nonmetallic Conduit:
   a) Carlon
   b) Cantex
   c) Triangle PWC, Inc.
4. Raceway Fittings:
   a) Appleton Electric Company
   b) Cantex (PVC)
   c) Carlon (PVC)
   d) Crouse Hinds
   e) Efcor Division
   f) ETP-Uni-Couple
   g) O.Z. Gedney Company
   h) Raco, Inc.
   i) Republic Steel Corporation
   j) Steel City
   k) Thomas and Betts
5. Support systems:
   a) Unistrut Building Systems
   b) B-Line Systems Inc.
   c) Kindorf
   d) Minerallac Fastening Systems
   e) Caddy
6. Outlet, pull and junction boxes:
   a) Appleton Electric Co.
   b) Crouse-Hinds
   c) Killark
   d) O-Z/Gedney
   e) Steel City

f) Raco
g) Bell
h) Hoffman Engineering Co.
i) Wiegmann
j) B-Line Circle AW
k) Adalet

7. PVC-coated Rigid Steel:
   a) Allied Tube & Conduit Corporation.
   b) Flexi-Guard, Inc.
   c) Occidental Coating Company.
   d) Perma-Cote.
   e) Republic Steel Corporation.
   f) Robroy.
   g) Triangle PWC, Inc.
   h) Youngstown Sheet & Tube.
   i) Wheatland.
8. Wireway:
   a) Hoffman Engineering Company.
   b) Wiegmann.
   c) Square D.
9. Ductbank Spacers:
   a) Formex.
   b) Carlon.
10. Precast Handholes, Pull Boxes and Accessories.
   a) Brooks.
   b) A.B. Chance.
   c) Utility Vault Company

2.3 RIGID METALLIC CONDUITS

A. Rigid Galvanized Steel Conduit (RGS):
   1. Mild steel with continuous welded seam,
   2. Metallic zinc applied by hot-dip galvanizing or electro-galvanizing; threads galvanized after cutting,
   3. Internal Coating: Baked lacquer, varnish or enamel for a smooth surface.
   4. Standards: ANSI C80.1, UL 6.

B. B. PVC-Coated Rigid Steel Conduit (PVC-RGS):
   1. Nominal 40 mil Polyvinyl Chloride Exterior Coating:
   2. Coating: Bonded to hot-dipped galvanized rigid steel conduit conforming to ANSI C80.1.
   3. The bond between the PVC coating and the conduit surface: Greater than the tensile strength of the coating.
   4. Nominal 2 mil, minimum, urethane interior coating.
   5. Urethane coating on threads.
   6. Conduit: Epoxy prime coated prior to application of PVC and urethane coatings.
   7. Female Ends: Have a plastic sleeve extending a minimum of 1 pipe diameter or 2 IN, whichever is less beyond the opening. The inside diameter of the sleeve shall be the same as the outside diameter of the conduit to be used with it.
   8. Standards: ANSI C80.1, UL 6, NEMA RN 1.

2.4 RIGID NON-METALLIC CONDUIT

A. Schedules 40 (PVC-40) and 80 (PVC-80):
   1. Polyvinyl-chloride (PVC) plastic compound which meets, as a minimum, ASTM D1784 cell classification PVC 12233-A, B, or C,
   2. Rated for direct sunlight exposure,
   3. Fire retardant and low smoke emission,
   4. Shall be suitable for use with 90 Deg C wire and shall be marked "maximum 90 Deg C".
   5. Standards: ASTM D1784, NEMA TC 2, UL 651.

2.5 FLEXIBLE CONDUIT

A. PVC-Coated Flexible Galvanized Steel (liquid-tight) Conduit (FLEX-LT):
   1. Core formed of continuous, spiral wound, hot-dip galvanized steel strip with successive convolutions securely interlocked,
   2. Extruded PVC outer jacket positively locked to the steel core,
   3. Liquid- and vapor-tight.
   4. Standard: UL 360.

2.6 WIREWAY

A. General:
   1. Suitable for lay-in conductors,
   2. Designed for continuous grounding.
   3. Covers:
      a) Hinged or removable in accessible areas,
      b) Non-removable when passing through partitions.
   4. Finish: Rust inhibiting primer and manufacturers standard paint inside and out except for stainless steel type.
   5. Standards: UL 870, NEMA 250.

B. Rain-tight (NEMA 3R) Wiring Trough:
   1. 14 or 16 GA galvanized steel without knockouts.
   2. Cover: Non-gasketed and held in place by captive screws.

C. Water-tight (NEMA 4X rated) Wireway:
   1. 14 GA Type 304 or 316 stainless steel bodies and covers without knockouts and 10 GA stainless steel flanges.
   2. Cover: Fully gasketed and held in place with captive clamp type latches.
   3. Flanges: Fully gasketed and bolted.

D. Dusttight (NEMA 12 rated) Wireway:
   1. 14 GA steel bodies and covers without knockouts and 10 GA steel flanges.
   2. Cover: Fully gasketed and held in place with captive clamp type latches.
   3. Flanges: Fully gasketed and bolted.

2.7 CONDUIT FITTINGS AND ACCESSORIES

A. Fittings for Use with RGS:
   1. In hazardous locations:
      a) Listed for use in Class I, Groups C and D locations.
   2. Locknuts:

a) Threaded steel or malleable iron,
b) Gasketed or non-gasketed,
c) Grounding or non-grounding type.

3. Bushings:
   a) Threaded, insulated metallic,
   b) Grounding or non-grounding type.
4. Hubs: Threaded, insulated and gasketed, metallic, for rain-tight connection.
5. Couplings:
   a) Threaded, straight-type: Same material and finish as the conduit with which they are used on.
   b) Threadless type: Gland compression or self-threading type, concrete tight.
6. Unions:
   a) Threaded galvanized steel or zinc plated malleable iron.
7. Conduit bodies:
   a) Body: Zinc plated cast iron or cast copper free aluminum with threaded hubs,
   b) Standard and mogul size.
   c) Cover: Clip-on type with stainless steel screws. Gasketed or non-gasketed galvanized steel, zinc plated cast iron or cast copper free aluminum.
8. Sealing fittings:
   a) Body: Zinc plated cast iron or cast copper free aluminum with threaded hubs,
   b) Standard and mogul size, with or without drain and breather.
   c) Fiber and sealing compound: UL listed for use with the sealing fitting.
9. Expansion couplings:
   a) 2 IN nominal straight-line conduit movement in either direction,
   b) Galvanized steel with insulated bushing,
   c) Gasketed for wet locations,
   d) Internally or externally grounded.
10. Fittings for Use with PVC-RGS:
    a) The same material and construction as those fittings listed under paragraph "Fittings for Use with RGS and coated as defined under paragraph "PVC Coated Rigid Steel Conduit (PVC-RGS)."

B. Fittings for Use with FLEX-LT:
   1. Connector:
      a) Straight or angle type,
      b) Metal construction, insulated and gasketed,
      c) Composed of locknut, grounding ferrule and gland compression nut,
      d) Liquid-tight.
   2. Standards: UL 467, 514B.

C. Fittings for Use with Rigid Non-Metallic Conduit:
   1. Coupling and adapters shall be of the same material, thickness, and construction as the conduits with which they are used.
      a) Standards: UL 651, NEMA TC 3.
   2. Solvent cement for welding fittings shall be supplied by the same manufacturer as the conduit and fittings.
      a) Standards: ASTM D2564.

D. Weather and Corrosion Protection Tape:
   1. PVC based tape, 10 mils thick,

2. Protection against moisture, acids, alkalis, salts and sewage and suitable for direct burial,
3. Used with appropriate pipe primer.

2.8 OUTLET BOXES

A. Metallic Outlet Boxes:
1. Hot-dip galvanized steel,
2. Conduit knockouts and grounding pigtail,
3. Accessories:
   a) Flat blank cover plates,
   b) Barriers,
   c) Extension, plaster, or tile rings,
   d) Box supporting brackets in stud walls,
   e) Adjustable bar hangers.
4. Standards: NEMA OS 1, UL 514A.

B. Cast Outlet Boxes:
1. Zinc plated cast iron or die-cast copper free aluminum with manufacturer's standard finish,
2. Threaded hubs and grounding screw,
3. Styles:
   a) "FS" or "FD",
   b) "Bell",
   c) "EDS" or "EFS" for hazardous locations.
4. Accessories: 40 mil PVC exterior coating and 2 mil urethane interior coating.
5. Standards: UL 514A and 886.

C. See Section 26 27 26 for wiring devices, wallplates, and coverplates.

2.9 PULL AND JUNCTION BOXES

A. NEMA 4 Rated:
1. Body and cover: 14 GA steel finished with rust inhibiting primer and manufacturers standard paint inside and out,
2. Seams continuously welded and ground smooth,
3. No knockouts,
4. External mounting flanges,
5. Hinged or non-hinged cover held closed with stainless steel screws and clamps,
6. Cover with oil resistant gasket.

B. NEMA 4X Rated (metallic):
1. Body and cover: 14 GA Type 304 or 316 stainless steel,
2. Seams continuously welded and ground smooth,
3. No knockouts,
4. External mounting flanges,
5. Hinged door and stainless steel screws and clamps,
6. Door with oil-resistant gasket.

C. NEMA 4X Rated (non-metallic):
1. Body and cover: Ultraviolet light protected fiberglass-reinforced polyester boxes,
2. No knockouts,

3. External mounting flanges,
4. Hinged door with quick release latches and padlocking hasp,
5. Door with oil resistant gasket.

2.10 SUPPORT SYSTEMS

A. Multi-conduit surface or trapeze type support and pull or junction box supports:
   1. Material requirements.
      a) Galvanized steel: ASTM A123 or ASTM A153.
      b) Stainless steel: AISI Type 316.
      c) PVC coat galvanized steel: ASTM A123 or ASTM A153 and 20 mil PVC coating.

B. Single conduit and outlet box support fasteners:
   1. Material requirements:
      a) Zinc plated steel
      b) Stainless steel
      c) Malleable iron
      d) PVC coat malleable iron or steel: 20 mil PVC coating
      e) Steel protected with zinc phosphate and oil finish.

PART 3 EXECUTION

3.1 INSTALLATION

A. General:
   1. Install electrical raceways and fittings as shown in accordance with the manufacturer's written instructions, the applicable requirements of the NEC, and in accordance with recognized industry practices to ensure that products serve the intended function. Complete electrical raceway installation before starting the installation of wire and cable.

B. Conduit Size:
   1. Minimum conduit size for power wiring shall be ¾". Minimum conduit size for control wiring shall be ¾". Minimum conduit size for voice/data wiring shall be 1".

C. Rigid Steel and Intermediate Metal Conduit:
   1. Use rigid steel conduit to run all electrical raceway systems where exposed to weather; in damp or wet locations; where subject to physical damage; and where cast in concrete walls or floors slabs which have waterproof membranes and where cast in masonry walls. Use rigid steel conduit for all exposed feeders. Use threaded type couplings and fittings. Split type couplings and fittings are not acceptable. The interior of all buildings shall be considered a damp or wet area.

D. Liquidtight Flexible Metal:
   1. Use liquidtight flexible metal conduit and fittings for all motor connections, and for other electrical equipment connections where subject to movement and vibration and when subject to one or more of the following conditions: (1) exterior locations, moist or humid atmosphere where condensation can be expected to accumulate; (2) corrosive atmosphere, subject to water spray; subject to dripping oil, grease or water. Install internal ground wire in flexible conduit with grounding bushings. Maximum length shall be 6'0" and minimum length shall be 3'0".

E. Rigid Nonmetallic:
   1. Use PVC conduit directly buried in earth, concrete encased, cast in concrete slabs, and where subject to corrosive environment. PVC may be used for all raceways on the

interior of the building, which do not contain 480 volt conductors or motor feeders. Use Schedule 40 where direct buried and Schedule 80 where exposed, with size adjusted to have same fill area as if Schedule 40 were used.

3.2 INTERIOR CONDUIT SYSTEM:

A. Ground all metallic conduit in accordance with the requirements of the latest edition of the NEC.

B. Install all conduit as a complete system without conductors, continuous from outlet to outlet and from fitting to fitting. Make up threaded joints of conduit carefully in such a manner as to ensure a tight joint. Field-cut threads shall be cold-galvanized after cutting. The entire conduit system shall be secured at all joints and boxes in such a manner that each system shall be electrically continuous throughout. Fasten the entire conduit system securely into position. A run of conduit between outlet and outlet, between fitting and fitting, or between outlet and fitting shall not contain more than the equivalent of four quarter bends, including those bends located immediately at the outlet or fitting.

C. Ream all ends of conduit properly to remove rough edges. Whenever a rigid steel conduit enters a switchboard, panelboard, enclosure, or box it shall be securely fastened by the use of a locknut inside and outside and an approved insulating bushing shall be installed. Insulated grounding bushings shall be installed on all conduits without ground conductors and where required by NEC Article 250. Lay out and install all conduit systems as to avoid all other services or systems, the proximity of which may prove injurious to the conduit or the wires or conductors which the conduit confines.

D. Conceal conduit systems in finished areas. Concealed metallic conduits shall be run in a direct manner, basically parallel to, and at right angles with the lines of the building, and with as long a bend as possible. Conduit may be exposed in mechanical rooms and where otherwise shown or indicated. On exposed systems, run the conduit parallel or perpendicular to the structural features of the building and rigidly support with malleable iron conduit clamps at intervals as required by NEC, or on conduit racks, neatly racked and bent in a smooth radius at corners insofar as practicable. All bends shall be field-made using an approved bending machine designed for the purpose, or using standard ells having a radius not less than that required by the National Electrical Code, and with approved fittings or connectors. All bends shall be free from dents or flattening.

E. All conduit shall be run without traps. Where traps are unavoidable, a junction or pull box shall be placed at the low point. Metallic conduit systems, which are exposed to the weather or water, shall be made watertight. As soon as conduit has been permanently installed in place, conduit shall be capped or plugged with standard accessories. All metallic conduit shall be swabbed after plaster and drywall is finished and dry.

F. Support exposed raceway or grouped concealed raceways on galvanized channel using compatible galvanized fittings (bolt, beam clamps, and similar items) and galvanized threaded rod pendants to secure raceway to channel and channel to structure. Support single conduit runs using a properly sized galvanized conduit hanger with galvanized closure bolt/nut and threaded rod. Support flexible conduit on maximum 4-1/2’ centers and within one foot (1’) of boxes. All raceway support system materials shall be galvanized and manufactured by Kindorf, Unistrut, Superstrut, Caddy, or Spring Steel Fasteners, Inc. Provide chrome or nickel-plated escutcheon plates on all conduit passing through walls and ceilings in finished areas.

G. Make all joints and connections to ensure mechanical strength and electrical continuity. PVC conduit shall be joined, or have fittings attached, by using a fusing (solvent) compound recommended by and applied as instructed by, the conduit manufacturer.

H. Run conduit to avoid proximity to heat producing equipment, piping and flues, keeping a minimum of 8” clear. Whenever possible, install horizontal raceway runs above water piping. Unless shown otherwise, do not install conduit horizontally in concrete slabs without written

approval. All roof penetrations shall be made in adequate time to allow the roofer to make proper flashings.

I. Carefully review architectural, structural, mechanical, plumbing, and electrical Drawings and place boxes and conduit to avoid conflicts with structural members or other general construction.

J. Conduit larger than ¾" shall not be embedded in structural slabs without prior written permission from the Engineer. Conduits embedded in structural slabs shall be installed in the middle of the slab below the top and above the bottom reinforcing steel. Maintain a minimum concrete coverage of one (1") except where penetration is made.

K. Furnish sleeves for timely placing in construction for all conduit passing through concrete walls, partitions, beams, floors, and roofs while same are under construction.

L. All conduit passing through the housing on connected equipment, shall pass through a cleanly cut hole protected with an approved grommet.

M. Metallic conduit installed below grade shall have its entire length painted with two coats of protective finish unless encased in concrete. Each coat shall consist of 5 mils of PPG "Coat Cat Epoxy Coating" applied in accordance with the manufacturer's recommendations. The entire length of metallic conduit, including fittings, shall be protected to a point 6" above finished grade (or concrete slab).

N. Install expansion fittings in all conduit as follows:

1. All conduits crossing building expansion joints; unless some other form of thermal expansion compensation is approved in writing by the Engineer,
2. All conduit straight runs in excess of 200', and 400' centers in all longer conduit runs,
3. Conduit entering environmental rooms,
4. Locations subject to thermal expansion and as required by NEC.
5. Unless expansion fitting has an integral bonding braid, an external braid approved for the purpose shall be installed around the fitting.

3.3 EXTERIOR CONDUIT SYSTEMS

A. Exterior conduit systems shall meet all of the general installation requirements for interior conduit systems.

B. All exterior conduit systems shall be completely watertight. All hangers, fasteners, and supports used with exterior conduit systems shall be stainless steel.

C. Install underground conduits with sealing glands equal to OZ Type "FSK" or approved equal exterior to entrance and OZ Type "CSB" or approved equal interior to entrance at points where conduits enter the building, to prevent water seepage.

D. Install conduits outside the building lines a minimum of 30" below grade, unless noted otherwise on the Drawing. Maintain 12" of earth or 2" of concrete separation between electrical conduits and other services or utilities below grade. Maintain 10'0" separation between parallel underground power and voice/data conduits. Where power and voice/data conduits cross below grade, crossing shall be at right angles (90 degrees) with a minimum 2'0" vertical separation.

3.4 EMPTY CONDUIT RACEWAY SYSTEMS

A. General: Empty conduit in which wire is to be installed by others shall have pull wires installed. The pull wire shall be No. 14 AWG zinc-coated steel, or plastic having not less than 200 pounds tensile strength. Not less than 12" of slack shall be left at each end of the pull wire.

3.5 IDENTIFICATION

A. See Section 26 00 02 for applicable labeling requirements.

B. Conduit Markers

1. All conduits scheduled shall be identified at each end with a permanent metallic tag. Conduits shall be labeled as identified on the Conduit and Wire Schedule. Attach tags to cables or conduit by using a nylon cable tie. Identify concealed conduits entering equipment, panelboards, or enclosures by attaching marker tag to cables as they exit the conduit. Embedded conduits and conduits routed underground shall be labeled also at all points of entry and exit including handholes and buildings, by attaching a marker tag to the exterior of the conduit.

3.6 FIELD INSPECTION

A. Prior to backfilling and encasing conduits installed underground or covering conduits concealed in walls and ceilings, all raceways shall be inspected by the Engineer. Engineer shall be contacted a minimum of one week in advance for field inspection of concealed raceway. No raceway shall be concealed or backfilled until inspected by the Engineer.

END OF SECTION

SECTION 26 24 16
PANELBOARDS

PART 1 GENERAL

1.1 SECTION INCLUDES

A. Material and installation requirements for:
   1. Power distribution panelboards.
   2. Surge protection components

1.2 DESCRIPTION OF WORK

A. This section covers furnishing and installing all panelboards and enclosure work, including cabinets, as shown, scheduled, indicated, and specified.

1.3 RELATED SECTIONS

A. Related Sections include but are not necessarily limited to:
   1. Section 26 00 00 – Electrical General Provisions
   2. Section 26 00 01 – Electrical Scope of Work
   3. Section 26 00 02 – Basic Materials and Methods
   4. Section 26 01 26 – Electrical Testing
   5. Section 26 05 26 – Grounding

1.4 STANDARDS AND REFERENCES

A. All materials and equipment specified herein shall, within the scope of UL Examination Services, be approved by the Underwriter's Laboratories for the purpose for which they are used and shall bear the UL label.

B. Products shall be designed, manufactured, tested, and installed in compliance with the following standards:
   1. National Electrical Manufacturers Association (NEMA):
      a) AB 1, Molded Case Circuit Breakers.
      b) PB 1, Panelboards.
      c) PB 1.1, Instruction for Safe Installation, Operation and Maintenance of Panelboards Rated 600 Volts or Less.
   2. Underwriters Laboratories, Inc. (UL):
      a) UL 1449, Standard for Surge Protective Devices.

C. All materials and equipment specified herein and their installation methods shall conform to the latest published version of the National Electrical Code, NEC.

1.5 SUBMITTALS

A. Shop Drawings
   1. See Section 26 00 00.

1.6 DELIVERY, STORAGE, AND HANDLING

A. See Section 26 00 00.

B. Deliver panelboards in factory-fabricated, water-resistant wrapping.

C. Handle panelboards carefully to avoid damage to material component enclosure, and finish.

D. Store panelboards in a clean, dry space and protect from the weather.

PART 2 PRODUCTS

2.1 GENERAL

A. Panelboards shall be dead front safety type equipped with molded case circuit breakers as shown and scheduled.

2.2 ACCEPTABLE MANUFACTURERS

A. Provide products complying with these specifications and produced by one of the following:
   1. Schneider Electric (Square-D)
   2. Siemens
   3. Eaton

2.3 MATERIALS AND COMPONENTS

A. Busing Assembly
   1. Panelboard busing shall be tin-plated 55% conductivity aluminum, plated by the latest Alstan process. Bus structure and mains shall have ratings as shown and scheduled and shall be phase sequence construction. Such ratings shall be established by heat rise tests with maximum hot spot temperature on any connector or busbar not to exceed 65 degree Celsius rise above 40 degrees Celsius ambient. Heat rise test shall be conducted in accordance with UL 67. The use of conductor dimensions will not be accepted instead of actual heat tests. All bus joints shall be bolted with medium carbon steel, zinc, or cadmium plated hardware equipped with lock washers and torqued to the manufacturer's recommended settings (usually ASTM standards). All bolted connections shall have Belleville washers. Furnish a bare un-insulated, or an isolated, where noted, ground bus inside each panelboard enclosure and elsewhere where noted on the Drawings. Furnish an isolated full size neutral bus, insulated where noted, in all panels where the neutral is present.

B. Molded Case Circuit Breakers
   1. Circuit breakers shall be of the molded case; thermal magnetic type equipped with individually insulated, braced and protected connectors. The front faces of all circuit breakers shall be flush with each other. Tripped indication shall be clearly shown by the breaker handle taking a position between "ON" and "OFF". Provisions for additional breakers shall be such that no additional connectors will be required to add breakers. Circuit breakers shall bolt on the main bus. All 2 and 3-pole breakers shall have common trips.
      a) All single-pole circuit breakers shall be either ambient or case-compensated (calibrated 40 degrees Celsius) thermal-magnetic type breakers, with inverse time delay on overloads and instantaneous magnetic trip on short circuits.
      b) All multiple-pole breakers shall be common trip, thermal-magnetic type (calibrated 40 degrees Celsius). Twin, tandem, and half-size single-pole breakers, and breaker tie handles are not acceptable.
      c) The breakers shall employ quick-make, toggle mechanism for manual operation, as well as automatic operation. The breakers shall have provisions for manually testing the tripping mechanism with the breaker removed from the panel.

2. Provide panelboard circuit breakers with interrupting capacity as shown, but in no case less than the following symmetrical amperes RMS:

Voltage (volts)	Interrupting Capacity
120/240	10,000 AIC
277/480	22,000 AIC

3. Ground circuit fault interrupter (GFCI) circuit breakers, where shown, shall be 5 ma ground fault trip and shall include a TEST button.

C. Lugs

1. Panelboards and distribution panels shall be provided with main lugs, main over-current devices, and feed-thru lugs as noted on the Drawings. Lugs shall be suitable for use with the cable size and material installed. Panel wire-ways shall provide adequate space for wiring to all lugs.

D. Spaces

1. Where space for future breakers is shown, panelboards enclosure shall include removable blank panels or knockouts to allow installation of future breakers and panelboard busing shall be complete, including all required connectors.

E. Integrated Equipment Rating

1. Each panelboard, as a complete unit, shall have a short-circuit rating equal to the interrupting rating of the weakest over-current devices, and feed-thru lugs as noted on the Drawings, where applicable. Such ratings shall have been established by tests on similar panelboards with the circuit breakers installed.

F. Panelboard Enclosures

1. Provide galvanized steel enclosures, NEMA Type 12 for indoor locations, NEMA 3R for outdoor locations, minimum 16 gauge thickness, minimum 20” width, with multiple knockouts, unless shown otherwise. Provide doors with concealed hinges, spring-loaded doors pulls, flush lock and key, all panelboard enclosures keyed alike, equipped with interior circuit directory frame, card and clear plastic covering. Door and trim shall be painted with manufacturers standard gray enamel finish over a rust inhibitor. Trim on flush mounted panels shall have concealed fasteners. Enclosure shall be for recessed or surface mounting as shown. Enclosures shall be fabricated by the same manufacturer as panelboards to be enclosed. Multi-section panelboards shall have separate covers and trims. Multi-section panelboards shall be installed side by side with covers butted together.

2.4 SURGE PROTECTIVE DEVICES

A. Panelboards shall be provided with a surge protection system for the protection of all AC electrical circuits from the effects of lightning-induced currents, substation switching transients, and internally generated transients resulting from inductive and/or capacitive load switching.

B. Surge protective devices shall be listed in accordance with UL 1449, Standard for Surge Protective Devices.

C. Surge protective devices shall be mounted internal to and integral with the panelboard.

D. Surge protective devices shall be provided with dry contacts output to monitor alarm status.

E. Surge protective devices shall be provided with surge counter which displays the combined total number of surges detected.

F. Visible indication of proper device connection and operation shall be provided and shall be visible without removal of the panel interior cover.

G. The mounting position of the device shall permit a straight and short lead length connection between the device and the point of connection to the main bus.

H. Surge protective devices shall meet or exceed the following criteria:

1. Peak Surge Current Rating Per Phase (based on 8/20us Waveform):

Voltage (volts)	Peak Surge Current Rating
120/240	120,000 Amps
277/480	160,000 Amps

2. Maximum Clamping Voltage Rating (Tested to ANSI/IEEE C62.41-1980 Cat. B, 6000V, 1.2/50us, 3000A 8/20 us Waveforms): 600 Volt
3. Transient Joule Rating/Phase (Based on 10/1000 µs Waveforms): 920 Joules

I. Units may be manufactured using Metal Oxide Varistors (MOV's) as primary protection component, or as a "hybrid" system using MOVs, Gas Tubes, Inductors, capacitors, and/or diodes. However, units relying solely on gas tubes or diodes are not acceptable.

J. Surge protective devices shall be of solid-state componentry and shall operate bidirectionally.

K. Surge protective devices shall be of Schneider Electric IMA series, or approved equal.

PART 3 EXECUTION

3.1 INSTALLATION OF PANELBOARDS AND ENCLOSURES

A. Install panelboards and enclosures as shown; including electrical connections, in accordance with the manufacturer's written instructions, the applicable requirements of NEC, the NECAs "Standard of Installation", and recognized industry practices to ensure that products serve the intended function.

B. Coordinate installation of panelboards and enclosures with cable and raceways installation work. Verify that wall thickness is adequate where recessed panels are shown.

C. Anchor enclosures firmly to walls and structural surfaces ensuring that they are permanently and mechanically secured.

3.2 TESTING

A. Prior to energization, check for continuity of circuits and for short circuits.

3.3 IDENTIFICATION

A. Refer to Section 26 00 02 for applicable labeling requirements and nameplates.

B. Circuit Index Card

1. Type the enclosure's circuit directory card upon completion of work.
2. Refer to Section 26 00 02 for additional requirements.

END OF SECTION

SECTION 26 27 26
WIRING DEVICES

PART 1 GENERAL

1.1 SECTION INCLUDES

A. Material and installation requirements for:
   1. Light switches
   2. Receptacles
   3. Device wallplates and coverplates

1.2 DESCRIPTION OF WORK

A. This section covers furnishing and installing all receptacles, switches and other wiring devices indicated on the drawings.

1.3 RELATED SECTIONS

A. Related Sections include but are not necessarily limited to:
   1. Section 26 00 00 – Electrical General Provisions
   2. Section 26 00 01 – Electrical Scope of Work
   3. Section 26 00 02 – Basic Materials and Methods

1.4 STANDARDS AND REFERENCES

A. All materials and equipment specified herein shall, within the scope of UL Examination Services, be approved by the Underwriter's Laboratories for the purpose for which they are used and shall bear the UL label.

B. Products shall be designed, manufactured, tested, and installed in compliance with the following standards:
   1. National Electrical Manufacturers Association (NEMA):
      a) NEMA 250, Enclosures for Electrical Equipment (1000 Volts Maximum)
      b) NEMA WD-1, General Purpose Wiring Devices
      c) NEMA WD-5, Specific Purpose Wiring Devices
      d) NEMA WD-6, Wiring Devices – Dimensional Requirements
   2. Underwriters Laboratories, Inc. (UL):
      a) UL 20, General Use Snap Switches
      b) UL 498, Attachment Plugs and Receptacles
      c) UL 514A, Metallic Outlet Boxes
      d) UL 943, Ground-Fault Circuit-Interrupters

C. All materials and equipment specified herein and their installation methods shall conform to the latest published version of the National Electrical Code, NEC.

1.5 SUBMITTALS

A. Shop Drawings
   1. See Section 26 00 00.

1.6 DELIVERY, STORAGE, AND HANDLING

A. See Section 26 00 00.

PART 2 PRODUCTS

2.1 GENERAL

A. Provide factory-fabricated wiring devices in the type, color, and electrical rating for the service indicated. Where type and grade are not indicated, provide proper selection to correspond with branch circuit wiring and over-current protection. Attachment of wires to devices shall be by screw pressure under the head of binding screws. Arrangements depending on spring pressure or tension are not acceptable. All binding screws shall be brass or bronze.

2.2 ACCEPTABLE MANUFACTURERS

A. Provide products complying with these specifications and produced by one of the following:
   1. Light switches and receptacles:
      a) Hubbell
      b) Bryant
      c) Pass & Seymour
      d) Arrow Hart
      e) General Electric
      f) Leviton
      g) Or approved equal.

2.3 LIGHT SWITCHES

A. General requirements unless modified in specific requirements paragraph of switches per designated areas or types:
   1. Toggle type, quiet action, Standard Specification grade,
   2. Self grounding with grounding terminal,
   3. Back and side wired,
   4. Solid silver cadmium oxide contacts,
   5. Rugged area housing and one-piece switch arm,
   6. Rated 20 A, 120/277 VAC,
   7. Switch handle color: Ivory,
   8. Types as indicated on the Drawings:
      a) Single pole
      b) Double pole
      c) 3-way
   9. Standards: UL 20, 514A; NEMA WD-6

B. Wet Non-architecturally Finished Areas:
   1. Coverplate: Gasketed zinc plated malleable iron or aluminum with stainless steel screws utilizing rocker, front mounted toggle or pull type switch. Single or multiple gang as required.

2.4 RECEPTACLES

A. General requirements unless modified in specific requirements paragraph of receptacles per designated areas:

1. Straight blade, Standard Specification grade,
2. Brass triple wipe line contacts,
3. One piece grounding system with double wipe brass grounding contacts and self grounding strap,
4. Back and side wired,
5. Rated 20 A, 125 VAC,
6. High impact nylon body,
7. Receptacle body color:
   a) Normal power: Ivory
8. Types as indicated on the Drawings:
   a) Normal: Self grounding with grounding terminal
   b) Ground fault circuit interrupter: Feed-through type with test and reset buttons
9. Duplex or simplex as indicated on the Drawings,
10. Configuration: NEMA 5-20R,
11. Standards: UL 498, 514A, 943; NEMA WD-1, WD-6.

B. Wet Non-architecturally Finished Areas:
   1. Coverplate (general): Weather resistant zinc plated or aluminum, gasketed, self-closing cover using stainless steel spring.
   2. Coverplate (dedicated receptacles for auto-samplers and metering pumps): Weatherproof (NEMA 3R) while in use, gasketed, flame retardant, UV stabilized polycarbonate, 2.5 IN minimum cover depth.

C. Exterior Locations:
   1. Coverplate: Weatherproof (NEMA 3R) while in use, gasketed, copper-fire aluminum, 2.5 IN minimum cover depth.

PART 3 EXECUTION

3.1 INSTALLATION

A. Mount devices where indicated on the Drawings.

B. Surface mount receptacles and light switches in concrete construction.

C. In masonry and metal stud construction, recess mount receptacles and light switches unless device precludes recessed mounting or unless otherwise noted on the Drawings

D. Where more than one receptacle is installed in a room, they shall be symmetrically arranged.

E. Set switches and receptacles plumb and vertical to the floor.

3.2 IDENTIFICATION

A. Refer to Section 26 00 02 for wiring device identification requirements.

3.3 TESTING

A. Prior to energization, check for continuity of circuits, for short circuits and check grounding connections. After energization, check each and every wiring device to demonstrate proper operation and receptacle polarization.

END OF SECTION

SECTION 26 28 00
OVERCURRENT PROTECTIVE DEVICES

PART 1 GENERAL

1.1 SECTION INCLUDES

A. Material and installation requirements for:
   1. Fuses
   2. Circuit Breakers

1.2 DESCRIPTION OF WORK

A. This section covers furnishing and installing the furnishing and installation of all fuses and circuit breakers used in this project.

1.3 RELATED SECTIONS

A. Related Sections include but are not necessarily limited to:
   1. Section 26 00 00 – Electrical General Provisions
   2. Section 26 00 01 – Electrical Scope of Work
   3. Section 26 00 02 – Basic Materials and Methods
   4. Section 26 29 13 – Enclosed Controllers
   5. Section 26 90 21 – Control System
   6. Section 26 90 22 – Pump Control Panel

1.4 STANDARDS AND REFERENCES

A. All materials and equipment specified herein shall, within the scope of UL Examination Services, be approved by the Underwriter's Laboratories for the purpose for which they are used and shall bear the UL label.

B. Products shall be designed, manufactured, tested, and installed in compliance with the following standards:
   1. American National Standards Institute:
      a) ANSI/UL 198E Class R Fuses.
      b) ANSI/UL 198C High-interrupting-Capacity Fuses, Current-Limiting types, Class L.

C. All materials and equipment specified herein and their installation methods shall conform to the latest published version of the National Electrical Code, NEC.

1.5 SUBMITTALS

A. Shop Drawings
   1. See Section 26 00 00.

1.6 DELIVERY, STORAGE, AND HANDLING

A. See Section 26 00 00.

PART 2 PRODUCTS

2.1 FUSES

A. Fuses shall be of the type and amperage indicated on the drawings. The voltage rating shall be appropriate for the application indicated. The fuse types indicated on the drawings imply a certain set of fuse characteristics. No substitutions of fuse types will be allowed without written approval from the Engineer.

B. All fuses used on the project shall be provided with “blown fuse” indicators.

C. Where fuses in motor circuits are indicated but not sized, provide Manufacturer's recommended fuse size based on actual motor installed.

D. Provide in-line or integrally-mounted fuse clips on control power or low-voltage transformer.

E. Provide fuse puller or pullers for fuse sizes used.

F. Provide a minimum of two (2) spare fuses for each fuse used.

G. Acceptable Manufacturers:
   1. BUSSMAN
   2. GOULD SHAWMUT
   3. LITTLEFUSE
   4. RELIANCE

2.2 MOLDED CASE CIRCUIT BREAKERS

A. Molded case circuit breakers shall be quick-make and quick-break type. They shall have wiping type contacts. Each shall be provided with arc chutes and individual trip mechanisms on each pole consisting of both thermal and magnetic trip elements. Two and three pole breakers shall be common trip. Circuit breakers utilizing handle ties shall not be allowed. All breakers shall be calibrated for operation in an ambient temperature of 40°C. Molded case circuit breakers shall be trip-free. Each breaker shall have trip indication independent of the ON or OFF positions.

B. Breakers shall have lugs UL listed for both copper and aluminum.

C. Circuit breakers shall be capable of accepting the cable shown on the drawings. Circuit breakers not capable of accepting the cable shown shall not be acceptable.

D. Breakers shall have the interrupting rating and trip rating indicated on the drawings.

E. Circuit breakers 250-ampere frame and below shall be Cutler-Hammer type Westinghouse Series C with thermal-magnetic trip units and inverse time-current characteristics. A push-to-trip button on the front of the circuit breaker shall provide a local manual means to exercise the trip mechanism.

2.3 USES

A. Breakers covered under this specification may be installed in switchboards, panelboards, motor control centers, combination motor starters, and individual enclosures.

PART 3 EXECUTION

3.1 INSTALLATION

A. Fuses and circuit breakers shall be installed in their respective enclosures and locations in such a manner as to insure tight connections so as to preclude arcing and overheating.

B. Install fuses in fuse holders immediately prior to energization of the circuit in which the fuses are installed. Fuses shall not be installed and shipped with equipment.

C. Labels

1. Place fuse identification labels, showing fuse size and type installed, inside the cover of each switch or other location where fuses are installed.

END OF SECTION

SECTION 26 28 16
SAFETY AND DISCONNECT SWITCHES

PART 1 GENERAL

1.1 SECTION INCLUDES

A. Material and installation requirements for:
   1. Fused and unfused safety and disconnect switches.

1.2 DESCRIPTION OF WORK

A. Provide safety and disconnect switch work as shown, scheduled, indicated, and as specified. The types of safety and disconnect switches required for the project include, but are not limited to, equipment disconnects and motor-circuit disconnects.

1.3 RELATED SECTIONS

A. Related Sections include but are not necessarily limited to:
   1. Section 26 00 00 – Electrical General Provisions
   2. Section 26 00 02 – Basic Materials and Methods

1.4 STANDARDS AND REFERENCES

A. All materials and equipment specified herein shall, within the scope of UL Examination Services, be approved by the Underwriter's Laboratories for the purpose for which they are used and shall bear the UL label.

B. Products shall be designed, manufactured, tested, and installed in compliance with the following standards:
   1. National Electrical Manufacturers Association (NEMA):
      a) NEMA KS 1, Enclosed Switches.
   2. Federal Spec. W-S-865 Switch, Box (Enclosed), Surface-Mounted.

C. All materials and equipment specified herein and their installation methods shall conform to the latest published version of the National Electrical Code, NEC.

1.5 SUBMITTALS

A. Shop Drawings
   1. See Section 26 00 00.
   2. Cut sheets of the safety and disconnect switches with ratings, voltage, poles, capacity, horsepower, short circuit rating, and all associated accessories clearly indicated.

1.6 DELIVERY, STORAGE, AND HANDLING

A. See Section 26 00 00.

PART 2 PRODUCTS

2.1 DISCONNECTS

A. Provide products complying with these specifications and produced by one of the following:

1. Schneider Electric (Square-D)
2. Siemens
3. Eaton

B. Safety and disconnect switches must have Underwriters' Laboratories, Inc., approval and bear the UL label.

2.2 MATERIAL

A. Provide heavy-duty type, dead front, sheet steel-enclosed, surface-mounted safety switches of the type and size indicated. Safety switches shall be rated for the voltage of the circuit in which they are installed. Safety switches used as motor disconnects shall be horsepower rated for the motor served.

B. Safety switches shall be quick-make break type with permanently attached arc suppressors and constructed such that switchblades are visible in the "OFF" position with the door open. The operating handle shall be an integral part of the box, not of the cover. Switch shall have provision to padlock in the "OFF" position. Safety switches shall have a cover interlock to prevent unauthorized opening of the switch door when the switch mechanism is in the "ON" position or closing of the switch mechanism when the switch door is open.

C. Cover interlock shall have an override mechanism to permit switch inspection by authorized personnel. Lugs shall be copper-plated or aluminum, suitable for copper or aluminum cable and front removable.

2.3 FUSING

A. Provide fusible safety switches where indicated. Fuse clips shall be positive pressure rejection type fuse clips suitable for use with UL Class R fuses. Bussman LPN, RK, LPS.

2.4 NEUTRAL

A. Provide safety switches with number of switched poles as indicated. Where a neutral is present in the circuit, provide a solid neutral with the safety switch.

2.5 ENCLOSURES

A. Safety switches installed in indoor locations shall be NEMA 1 general-purpose enclosures unless otherwise shown or specified.

B. Safety switches installed in exterior locations or where exposed to outdoor conditions shall be NEMA 3R (water resistant) unless otherwise shown or specified.

C. Safety switches installed in wet or corrosive areas shall be NEMA 4X, aluminum or stainless steel, unless otherwise shown or specified.

PART 3 EXECUTION

3.1 INSPECTION

A. Installer shall examine the areas and conditions under which safety and disconnect switches are to be installed and notify the Contractor in writing of conditions detrimental to the proper and timely completion of the work. Do not proceed with the work until unsatisfactory conditions have been corrected.

3.2 INSTALLATION OF SAFETY AND DISCONNECT SWITCHES

A. Install safety and disconnect switches where shown, in accordance with the manufacturer's written instruction, the applicable requirements of the NEC, the NECAs "Standard of

Installation", and recognized industry practices to ensure that products serve the intended function.

B. Provide safety switches where shown and at each motor which is out-of-sight-of or greater than 50' from the source from which the motor circuit is fed, unless another NEC complying disconnecting method is utilized.

C. Provide all safety and disconnect switches with galvanized angle or other suitable supports where mounting on wall or other rigid surface is impractical. Switches shall not be supported by conduit alone. Where safety and disconnect switches are mounted on equipment served, the switch shall not inhibit removal of any service panels or interfere with any required access areas.

D. Fasten securely to supporting structure at walls and stands:
   1. Wood screws or lag screws to wood boards or timbers,
   2. Machine bolt to metal framing or plates,
   3. Expansion anchors to concrete walls,
   4. Expansion toggle wing bolts or sleeve anchors to hollow block,
   5. Provide 1 inch spacers to set panel out from concrete or block wall.

E. Stands and supports:
   1. Corrosion-resistant materials and finishes,
   2. Unistrut-type materials for fabrication,
   3. Expansion anchors for bolts in concrete floor,
   4. Machine bolt to metal framing or plates,
   5. Wood screws or lag screws to wood boards or timber,
   6. Backing plate for mounting units,
   7. Fasten stand securely to floor,
   8. Dimensions as required by equipment to be mounted.

F. Arrange for driven equipment use or function:
   1. Similar units adjacent.
   2. Adequate space for operation and servicing.

G. Mounting height:
   1. Single unit, 4 feet 6 inch center line above floor

H. Install disconnect switches used with motor-driven appliances, motors, and controllers within sight of the controller position unless otherwise indicated.

I. Coordinate safety and disconnect switch installation work with electrical raceway and cable work as necessary for proper interface.

3.3 TESTING

A. Prior to energization, check for continuity of circuits and for short circuits.

3.4 IDENTIFICATION

A. Refer to Section 26 00 02 for applicable painting, nameplates, and labeling requirements.

END OF SECTION

SECTION 26 29 13
ENCLOSED CONTROLLERS

PART 1 GENERAL

1.1 SECTION INCLUDES

A. Material and installation requirements for:
   1. Enclosed motor starters/controllers

1.2 DESCRIPTION OF WORK

A. This section covers the enclosed blower starters indicated on the drawings and specified herein. The control components shall be supplied and installed as an integrated system which includes all accessories necessary for operation.

B. Assemble the system to provide the control functions and sequences indicated by the drawings and these specifications. The work shall include, but not be limited to the following:
   1. Provide a complete blower control system consisting of main panel disconnect circuit breaker, motor controllers, blower status equipment, control power distribution circuit breakers and associated control equipment, relays, indicating lights, selector switches, and reset pushbutton.
   2. Provide control and monitoring equipment, wiring and terminal blocks for alarm and status interface the new facility control panel as indicated on the P&IDs and specified in Section 43 11 33.

C. The enclosed blower starters shall be designed and assembled to:
   1. Be an integrated system composed of components which are specifically designed and used for control and operation of blower equipment and which are standard, catalog listed products.
   2. Provide the capabilities indicated and implied by these specifications and such additional capabilities as may be necessary for proper operation of the blowers and blower equipment.

1.3 RELATED SECTIONS

A. Related Sections include but are not necessarily limited to:
   1. Section 26 00 00 – Electrical General Provisions
   2. Section 26 00 01 – Electrical Scope of Work
   3. Section 26 00 02 – Basic Materials and Methods
   4. Section 26 01 26 – Electrical Testing
   5. Section 26 05 19 – Wire and Cable
   6. Section 26 05 26 – Grounding
   7. Section 26 70 00 – Motors
   8. Section 43 11 33 – Rotary Lobe Blowers

1.4 STANDARDS AND REFERENCES

A. All materials and equipment specified herein shall within the scope of UL Examination Services, be approved by the Underwriter's Laboratories for the purpose for which they are used and shall bear the UL label.

B. All equipment and materials shall conform to the latest revised editions of applicable standards published by the following organizations:
   1. American National Standards Institute (ANSI).
   2. Institute of Electrical and Electronic Engineers (IEEE).
   3. National Electrical Manufacturers Association (NEMA).
   4. Underwriters' Laboratories (U/L).
   5. Instrument Society of America (ISA).

C. All materials and equipment specified herein and their installation methods shall conform to the latest published version of the National Electrical Code, NEC.

D. All enclosed starters shall bear a label by an approved testing authority for the completed assembled panel.

1.5 SUBMITTALS

A. Shop Drawings
   1. See Section 26 00 00.

1.6 DELIVERY, STORAGE, AND HANDLING

A. See Section 26 00 00.

1.7 RESPONSIBILITY OF CONTRACTOR AND BLOWER SYSTEM VENDOR

A. The Contractor shall be solely and completely responsible for coordination and integration of enclosed controllers with the existing panelboard, control system, blowers and other related equipment. The Contractor shall communicate directly with the manufacturer(s) and supplier(s) of all related equipment to determine all intended details of the equipment which may influence or affect the control system. The Contractor shall determine all requirements for and shall cause integration of the control system and all other control equipment into a unified operating system. The Contractor shall define all requirements for all interfacing equipment and shall supply all appurtenances, accessories and all such devices which may be required for proper interfacing as part of the control system.

B. The Contractor shall be responsible to obtain submittal information on equipment which may be supplied by other disciplines and to integrate them into the control system to form a complete working package as outlined by the contract documents. This includes but is not limited to the following list of major pieces of equipment:
   1. Blowers
   2. Facility Control Panel

1.8 WARRANTY

A. In accordance with the general requirements of these specifications, the Contractor shall guarantee the control system to be free of defects in design, materials and workmanship for a period of one (1) year following the date of acceptance, by formal action of the Owner, of all work under the contract.

PART 2 PRODUCTS

2.1 APPROVED STARTERS

A. Allen Bradley

B. Eaton

C. Siemens

D. General Electric

E. Schneider

2.2 MOTOR STARTERS

A. Motor starters shall be of the combination circuit breaker type. Thermal overload relays on starters shall be non ambient, compensated, bimetallic type with selector for either auto or door mounted manual reset pushbutton. All starters shall be provided with two field convertible auxiliary contacts. All motor starters shall be HAND-OFF-AUTO (HOA) selector switch type, with indicating lights for running, overload and individual system related faults. Auxiliary components such as indicating lights shall be mounted on the compartment door or cover. All control power leads in to and out of each unit shall pass through a ganged knife blade control power disconnect switch. The control power disconnect shall be identified as such.

B. All phase conductors shall be provided with an overload relay sized for equipment served. Verify size in field.

2.3 ENCLOSURES

A. Provide galvanized steel enclosures, NEMA Type 12 for indoor locations, NEMA 3R for outdoor locations, unless shown otherwise. Door and enclosure shall be painted with manufacturers standard gray enamel finish over a rust inhibitor.

2.4 CIRCUIT BREAKERS

A. Circuit breakers shall be molded case, instantaneous trip, magnetic type, listed for motor protection. They shall be capable of being padlocked in the open position. Circuit breakers shall be quick-make and quick-break type. They shall have wiping type contacts. Each shall be provided with arc chutes, individual trip mechanisms on each pole. Two and three pole breakers shall be common trip. All breakers shall be calibrated for operation in an ambient temperature of $40^{o}C$. Molded case circuit breakers shall be trip-free. Each breaker shall have trip indication independent of the ON or OFF positions.

2.5 ELAPSED TIME METERS

A. Elapsed Time Meters (ETM or run time (RTM)) on control panels shall be 1-1\2"X 3/4" nominal size, case type for flush panel mounting. The meter face shall be of the style that most closely resembles the indicating instruments and shall have black trim with white or aluminized face. The meters shall have a 6-digit non-reset register with the last digit indicating tenths of an hour. Veeder-Root or equal.

2.6 SELECTOR SWITCHES

A. Selector switches shall be NEMA 13, or NEMA 4X as required by mounting location. Selector switches shall be 2, 3, or 4 position as required by the application. Selector switches installed outdoors shall have knob lever operator handle. Selector switches installed indoors shall have standard knob operator. Units shall be heavy duty type, Allen-Bradley 800H or 800T, G.E. Series CR104P or equal.

2.7 PUSHBUTTONS AND INDICATING LIGHTS

A. Pushbuttons and indicating lights shall be NEMA 12 oiltight, dustight or NEMA 4X heavy duty type with detachable contact blocks. Indicating lights shall be LED press-to-test 24 VDC or 120VAC transformer type as required. Units shall be Allen-Bradley 800T or 800H or equivalent.

2.8 RELAYS

A. Relays for general purpose use shall have, 10 Amp contacts with the appropriate coil voltage for the application. All relays shall have an integral indicating light to show if there is coil voltage present. They shall have an 8-pin/blade base and matching socket. Units shall be Allen-Bradley 700 type HA, HB, Idec RH Series, or equal. Appropriate relay shall be selected based on application from the control wiring diagrams.

2.9 TERMINALS

A. Provide terminals for all wire connections to field wiring and internal power distribution. Connections shall have box type lugs capable of terminating 2 #14 AWG stranded wires. Terminals shall be strip mounted as manufactured by Phoenix Contact or equal.

B. Provide terminals on a 1-1/2” raised track in control cabinets. Track shall be aluminum and bonded to the cabinet.

C. Provide 1 spare, or 3% whichever is the greater amount, spare (noninstalled) replacement terminals for each type used.

2.10 NAMEPLATES

A. Nameplates - each motor starter shall have a nameplate designating the equipment it controls. Nameplates shall be made of 1/16" thick, machine engraved, laminated phenolic, having white letters not less than 3/16" high on a black background.

PART 3 EXECUTION

3.1 SUPPORTS

A. Secure solidly to wall or on approved mounting frame. Motor starters supported only by raceway or by equipment served are not acceptable.

B. Locate motor starter where shown on drawings, or on or near equipment being served. Coordinate location with other trades.

END OF SECTION

SECTION 26 70 00
MOTORS

PART 1 GENERAL

1.1 SECTION INCLUDES

A. Material and installation requirements for:
   1. Motors

1.2 DESCRIPTION OF WORK

A. This section covers motors which are supplied with and as part of connected equipment specified in other sections of this specification.

B. Special provisions, requirements and/or revisions to this Specification and/or Bid Item(s) may be included on the Drawings or Details.

1.3 RELATED SECTIONS

A. Related Sections include but are not necessarily limited to:
   1. Mechanical Equipment Specifications
   2. Section 26 00 00 – Electrical General Provisions
   3. Section 26 00 01 – Electrical Scope of Work
   4. Section 26 00 02 – Basic Materials and Methods
   5. Section 26 01 26 – Electrical Testing
   6. Section 26 05 19 – Wire and Cable
   7. Section 26 05 26 – Grounding
   8. Section 26 05 33 – Raceways
   9. Section 26 29 13 – Enclosed Controllers
   10. Section 26 90 22 – Pump Control Panel

1.4 STANDARDS AND REFERENCES

A. All materials and equipment specified herein shall within the scope of UL Examination Services, be approved by the Underwriter's Laboratories for the purpose for which they are used and shall bear the UL label.

B. All materials and equipment specified herein shall conform with all applicable NEMA, ANSI and IEEE Standards

C. All materials and equipment specified herein and their installation methods shall conform to the latest published version of the National Electrical Code, NEC.

1.5 SUBMITTALS

A. Shop Drawings
   1. See Section 26 00 00.
   2. Drawings and Data: Catalog information and complete name-plate and efficiency information.
   3. Motor wiring and connection diagrams for all provided external connections including power, overtemp contacts, space heaters, moisture sensors, etc.

4. Physical drawing showing electrical connection.
5. Motor terminal connection box size.
6. Refer to individual equipment specification requirements.
7. For motors provided with cords, provide complete information on the cord including:
   a) Length, number and size of conductors, overall diameter, materials, ratings, etc.
8. For motors with special requirements for protection such as overtemp, moisture, overtorque, etc. from electrical controls or components, submit detailed information on equipment, installation, and control wiring requirements.

1.6 DELIVERY, STORAGE, AND HANDLING

A. See Section 26 00 00.

PART 2 PRODUCTS

2.1 GENERAL

A. Unless specifically excepted, all motors shall be "premium efficiency" type which meet the minimum efficiencies required by the Washington State energy codes and the current Energy Policy Act. Normal efficiency motors shall not be supplied. In addition, all motors shall have a minimum power factor rating of .85 at full load, motors rated at a lower power factor shall not be supplied.

B. Provide motors in accordance with standard NEMA type classifications as specified. The use of industry standard sub classifications such as "Mill and Chemical" motors and similar "standard" heavy-duty designs are encouraged where they meet or exceed the specified minimum requirements.

C. All Motors shall be suitable both electrically and mechanically to drive the connected equipment under any and all modes of operation. The speed, horsepower, torque, base, bearing, shaft, insulation, and enclosure shall be closely coordinated with equipment requirements specified herein and in other portions of this specification so as to provide a satisfactory, efficient drive without overloading, overheating, abnormal noise or vibration.

D. All Motors shall be designed and built for long, trouble-free life in industrial service and shall be capable of operating successfully under the following application conditions:
   1. 40° C maximum ambient temperature to -20° C minimum ambient temperature,
   2. 3,300 ft. maximum altitude,
   3. Voltage variations to plus or minus 10% of nameplate rating,
   4. Frequency variations to plus or minus 5% of nameplate rating,
   5. .85 minimum full load power factor.

E. All motors shall be rated for full voltage starting, NEMA Design B, normal torque, normal starting current, unless otherwise required by the driven equipment or specified.

F. All motors shall be suitable for the environment in which they are to be installed.

2.2 ENCLOSURES

A. Totally enclosed fan cooled (TEFC) unless otherwise specified.

B. Cast iron stator frames and end shields, rigid construction.

C. Heavy fabricated steel, or cast iron for single phase motors.

2.3 MOTOR ACCESSORIES

A. Motor Leads: Provide motor leads compatible with motor insulation system, permanently identified.

B. Eyebolts: Provide drilling and tapping for eyebolts on all motors weighing more than 83 pounds.

C. Nameplates: Provide two engraved stainless steel stamped metal nameplates (one for the motor and one for mounting in the motor starter enclosure), with the information required by NEMA-MG1 and the following additional information:

1. Maximum ambient temperature for which motor is rated,
2. Class of insulation,
3. Service factor,
4. Bearing part number,
5. Motor connection diagram if more than three leads,
6. Power rating in kW if driven equipment ratings are given in metric units,

D. All single-phase motors shall be self-protected unless specified "for separate protection", and the self-protection characteristic shall be indicated on the motor nameplate. Protection shall be manual or automatic-reset type as specified or required by safety considerations of the equipment served.

E. Single phase motors shall be provided with start capacitors if necessary for proper operation of the motor. The start capacitors shall be located within the motor housing.

F. Enclosed Motors: Provide drain plugs for non-explosion proof motors and drain and breather for explosion proof motors.

G. Finish: Provide a prime and final finish of the manufacturer's standard colors.

2.4 MOTOR TERMINAL CONNECTION BOX

A. Provide a terminal connection box two sizes larger than normal to allow extra room for motor feeder splices.

1. Refer to Section 26 05 19 – Wire and Cable.
   a) Motor Terminal Splice Insulation

B. Conduit Entrance: Provide conduit entrance box on the right-hand side of all horizontal motors, when facing motor end opposite shaft extension unless otherwise detailed on the drawings or required by the unique characteristics of the equipment served. Provide conduit entrance box size and drilling to conform to the conduit or wiring requirements indicated on the electrical drawings. Include motor leads and all accessory leads in a common conduit entrance box.

2.5 INSULATION CLASS

A. Provide NEMA Class B insulation with additional nonhygroscopic moisture protection which will maintain a minimum resistance of 1.0 megohms after 168 hours of exposure at 100% humidity.

B. Class F insulation with additional nonhygroscopic moisture protection as specified above may be utilized at the Contractor's option, however, the temperature rise as measured by resistance when operating at rated service factor and load shall conform to the limiting observable temperatures in NEMA-MGI, for class B insulation.

C. Class A insulating materials shall not be utilized.

2.6 SERVICE FACTOR

A. The rated nameplate horsepower of the motor, when operating at a service factor of 1.0, shall be equal to or greater than the horsepower required to drive the connected equipment under any and all modes of operation.

B. Provide motors with a 1.15 service factor.

2.7 SUBMERSIBLE MOTORS

A. Definite purpose submersible motors shall conform to the following:

1. Motor shall be designed for service in a liquid temperature of 25° C. Set controls to permit operation only when fully submerged unless specifically rated for non submerged duty.
2. Motor shall have two mechanical seals; the lower one outside the motor and protecting the upper one which shall be in an oil filled chamber.
3. Provide embedded thermostats for thermal alarm or motor cut-out.
4. Provide water detector probes in seal oil chamber.
5. Provide one or more multiconductor cables of approved construction and suitable length to extend from the motor to the indicated receptacle or junction box. Provide strain relief for the cable.
6. Separate cables shall be provided for power and alarm conductors.
7. Provide control wiring connection diagram and all necessary components, relays, etc. for the required and proper control and shutdown of the motor. Provide descriptive information to the Engineer and/or System Integrator on the control of the equipment.

2.8 POWER RATINGS

A. Motor horsepower, if indicated in the detailed equipment specifications, are minimum size acceptable.

B. Ratings indicated on the electrical drawings are for guidance only and do not limit the equipment size.

C. Frame/hp relationships shall conform to the latest NEMA standards for "T" or "U" frames, and all dimensions shall meet NEMA standards.

2.9 SYNCHRONOUS SPEED

A. In general, the motor speed indicated is the rated synchronous speed. Provide motor rated full-load speeds which are compatible with the specified performance of the driven equipment.

2.10 STANDARD RATED VOLTAGE PHASE AND FREQUENCY

A. Provide motors nameplate-rated for 60 hertz power supply as follows unless otherwise specified or shown on the drawings:

1. Motors less than 1/6 hp, single-phase, 115V.
2. Motors 1/6 hp to 1/2 hp, single-phase, 115/230V.
3. Motors 1/2 hp through 100 hp, three-phase 230/460V.
4. Multi-speed and part winding start motors may have single voltage rating if manufacturer's standard.

B. Conform to the specified service conditions and the equipment specifications without reduction in the service factor.

2.11 BEARINGS & SHAFTS

A. All bearings shall be anti-friction-type AFBMA standard sizes. All motors shall provide a minimum bearing life of 20,000 hours. All motors shall have thrust ratings not less than the combined static and dynamic loads to be imposed.

B. Shafts shall be in accordance with NEMA "T" or "TS" dimensions. Long shafts shall be suitable for belt, chain or gear drive within limits established by good industrial practice and documented by NEMA. Short shafts shall be used for direct connection. Vertical motors shall be the solid-shaft type except where application requires a hollow-shaft design.

C. Balance and Vibration: Conform to NEMA standard, MG1, latest revision.

2.12 DUTY CYCLE

A. Provide motors rated for continuous duty unless otherwise specified.

2.13 LUBRICATION

A. Horizontal polyphase motors shall be grease lubricated. The bearing housing shall be large enough to hold sufficient lubricant to minimize the need for frequent re lubrication but facilities shall be provided for adding new grease and draining out old grease without major motor disassembly. Motors 180T frame and smaller may utilize grease release fitting in lieu of grease drain plug. The bearing housing shall have long, tight, running fits or rotating seals to protect against the entrance of foreign matter into the bearings or leakage of grease out of the bearing cavity.

B. Vertical polyphase motor lubrication shall conform to the motor manufacturer's recommendations. Except as otherwise recommended, guide bearings shall be ball bearings, grease lubricated; thrust bearings shall be grease lubricated through frame 280T, oil lubricated in larger frame sizes.

2.14 EFFICIENCY

A. Efficiency shall be determined by testing production motors with a dynamometer at rated output, voltage and frequency in accordance with IEEE Specification 112A, Paragraph B.

2.15 SHOP TESTS

A. Each polyphase motor shall be given a routine test to determine that it is free from electrical or mechanical defects and provide assurance that it meets the specifications. The routine test shall conform to applicable NEMA and IEEE Standards latest revision.

B. Copies of the test report will not be required unless actual operation and installation suggest the motors' performance should be verified, in which case certified copies of the test report shall be submitted upon the Engineer's request.

PART 3 EXECUTION

3.1 INSTALLATION

A. Motors shall be factory installed on common bases, stands, etc., with the driven equipment. Provide suitable couplings and guards between motor and driven equipment.

B. Align and connect to driven equipment.

C. Provide suitable personnel guards over all shafts, couplings, or other exposed moving parts.

D. Connect motors to power supply and controllers.

E. Verify correct rotation of equipment.

F. Connect motor leads with a splice kit specifically designed for motor lead connection.
   1. Refer to Section 26 05 19 – Wire and Cable.

3.2 INSTALLATION CHECK

A. Provide services of an experienced, competent, and authorized representative of manufacturer to visit site of work to inspect, check, adjust if necessary, and approve equipment installation for motors.

B. Assure that equipment manufacturer's representative is present when equipment is placed in operation.

C. Verify that equipment representative revisits job site as often as necessary until all trouble is corrected and equipment installation and operation are satisfactory, at discretion of Engineer.

D. Verify that motor overcurrent protection is in accordance with the NEC.

E. Verify the motor protection and control is in accordance with the equipment manufacturer’s requirements.

F. The Contractor shall open each motor terminal box for inspection by the Engineer.

3.3 TESTS

A. The Contractor shall simulate all motor alarm and shutdown conditions to test that the motor control is operating correctly. These tests shall be witnessed and verified by the Engineer.

B. The Contractor shall perform voltage, current and resistance tests as required to complete the Motor Test Report.
   1. Refer to Section 26 01 26 – Testing.
   2. The Contractor shall inform the Engineer a minimum of 3 days in advance of testing and shall only perform tests with the Engineer or Owner’s representative present.

C. If the test results indicate corrective measures are required, the Contractor shall undertake all such corrective measures until the electrical system is accepted by the Engineer. No additional compensation will be paid for corrective measures.

END OF SECTION

SECTION 26 90 21
CONTROL SYSTEM

PART 1 GENERAL

1.1 SECTION INCLUDES

A. Related Sections

B. References

C. Submittals

D. Intent

E. Delivery and Storage

F. Coordination

G. Products

H. Execution

1.2 DESCRIPTION OF WORK

A. This section covers furnishing and installing the system for control and monitoring of motor driven pumps, blowers and equipment and all component instruments and sensing devices, including the facility control panel.

1.3 DEFINITIONS

A. For the purposes of describing the control system and associated electrical work the following definitions shall be used.

1. "**Contractor**" is the party who furnishes and installs all tools, materials and equipment. This includes the Prime Contractor, the Electrical Contractor and all other Contractors and Sub Contractors.
2. "**Control System Integrator**" is the Party that furnishes all control components and designs the detailed control wiring diagrams plus the layout and assembly of the custom control panels.
3. "**Control System**" includes all equipment, instruments and wiring for control and monitoring of all operating pumps and equipment. This includes custom control panels, motor control centers, packaged control panels, and control equipment furnished with other systems and mechanical equipment. All sensing, transmitting, indicating, control and recording of all functions as specified and shown are also included in the control system.

1.4 RELATED SECTIONS

A. Related Sections include but are not necessarily limited to:

1. Section 26 00 00 – Electrical General Provisions
2. Section 26 00 01 – Electrical Scope of Work
3. Section 26 00 02 – Basic Materials and Methods
4. Section 26 01 26 – Electrical Testing
5. Section 26 05 19 – Wire and Cable
6. Section 26 05 26 – Grounding

7. Section 26 28 00 – Overcurrent Protective Devices
8. Section 26 29 13 – Enclosed Controllers
9. Section 26 70 00 – Motors
10. Section 26 90 21 – Control System
11. Section 26 90 22 – Pump Control Panel
12. Section 40 05 50 – Process Valves and Actuators
13. Section 40 70 00 – Process Instrumentation and Functions
14. Section 43 11 33 – Rotary Lobe Blowers

1.5 STANDARDS AND REFERENCES

A. All materials and equipment specified herein shall within the scope of UL Examination Services, be approved by the Underwriter's Laboratories for the purpose for which they are used and shall bear the UL label.

B. International Society for Measurement and Control (ISA):
   1. S5.1, Instrumentation Symbols and Identification.
   2. S5.2, Binary Logic Diagrams for Process Operations.
   3. S5.3, Graphic Symbols for Distributed Control/Shared Display Instrumentation, Logic and Computer Systems.
   4. S5.4, Standard Instrument Loop Diagrams.
   5. S20, Standard Specification Forms for Process Measurement and Control Instruments, Primary Elements and Control Valves.
   6. RP7.1-56, Pneumatic Control Circuit Pressure Test.

C. National Electrical Manufacturers Association (NEMA):
   1. ICS 2, Standards for Industrial Control Devices, Controllers and Assemblies.
   2. ICS 4, Terminal Blocks for Industrial Use.
   3. ICS 6, Enclosures for Industrial Controls and Systems.

D. National Fire Protection Association (NFPA):
   1. 70, National Electric Code (NEC).

E. Underwriters Laboratories Inc. (UL):
   1. 508, Industrial Control Equipment.

F. National Institute of Standards and Technology (NIST).

1.6 SUBMITTALS

A. Shop Drawings
   1. See Section 26 00 00, 40 05 50 and 40 70 00.

B. Equipment Submittals:
   1. Product Submittals are to be submitted to Engineer for review and approval prior to fabrication for all major system components including but not limited to:
      a) PLC System
      b) PLC Operator Interface Terminal
      c) Panel Enclosure
      d) Power Supplies
      e) Instrumentation and Control Components
   2. Provide reference numbering on all cut sheets to relate them to the bill of materials. Provide same reference numbering by the equipment shown on the shop drawings.

3. Submittals shall be original printed material or clear unblemished photocopies of original printed material. Facsimile information is not acceptable.

C. Product technical data including:
   1. Acknowledgement that products submitted meet requirements of standards referenced.
   2. Equipment catalog cut sheets.
   3. Instrument data sheets:
      a) ISA S20 or approved equal.
   4. Materials of construction.
   5. Size and weight.
   6. Electrical power requirements and wiring diagrams.
   7. NEMA rating of housings.
   8. Submittals shall be marked with arrows to show exact features to be provided.
   9. Loop diagrams per ISA S5.4.
      a) Each loop diagram on a separate sheet.
      b) Each sheet shall contain the following minimum information.
         i. All loop devices clearly identified.
         ii. Identification of the loop and each loop component, including connections to such things as recorders and computers. Numbering and tagging must agree with the P&ID.
         iii. All interconnections with identifying numbers for:
            a. Electrical cables.
            b. Conductor pairs.
         iv. Identification of connections including:
            a. Junction boxes.
            b. Terminals.
            c. PLC input/output connections.
            d. Operator Interface Terminal input/output connections.
            e. Grounding systems.
      c) Signal levels and ranges.
      d) Device location.
      e) Energy sources designating voltage, pressure, and other applicable requirements.
      f) Enough process lines and equipment to clearly show the process side of the loop and provide clarity of control action.
      g) Reference to supplementary records and drawings to show inter-relation to other control loops.
      h) Controller action.
      i) Control valve action upon electronic or hydraulic failure.
   10. Process connected instrument installation details containing the following minimum information:
      a) Bill of materials providing as a minimum the following information:
      b) Tube material and size.
      c) Connection size.
      d) Fitting size, material, and rating.
      e) Valve type and material.
      f) Instrument description.
      g) Pipe stand size and material.
      h) Required elevations and dimensions.

11. Comprehensive set of point-to-point wiring diagrams showing all interconnections between packaged systems or equipment control panels, motor control centers, instrumentation and all other electrical equipment as required to depict a complete and functional plant-wide electrical control system. Instrumentation wiring already shown on loop diagrams need not be included on point-to-point wiring diagrams.
    a) Diagrams shall provide the following minimum information:
        i. Terminal block identification (includes terminals on remote equipment furnished by Others).
        ii. Wire identification number.
        iii. Wire size.
        iv. Wire type.
        v. Wire color.
        vi. Wire shielding and insulation type.
        vii. Conductor quantities and associated conduit size.
        viii. Conduit identification.
        ix. Ground points.
        x. Interconnection requirements to existing systems or equipment furnished by Others.
    b) Diagrams shall be provided on Drawings of sufficient size so as to minimize the number of drawings.
        i. Maximum drawing size: 11 x 17 IN.
        ii. Minimum drawing size: 8 x 11 IN.
12. Electrical schematic control diagrams. Diagrams shall include:
    a) Terminal identification.
    b) Unique identification of all control devices and contacts.
    c) Utilize Owner's device identification numbers where applicable.
    d) Wire identification.
    e) Equipment identification.
    f) Indication of remote and local devices and wiring.
    g) Overcurrent protection indication.
    h) Voltage.
    i) All control logic.
13. Panel fabrication and wiring drawings.
14. PLC equipment drawings.
15. Graphic layouts of all operator interface screens.
16. Graphic component construction.
17. Nameplate layout drawings.
18. Drawings, systems, and other elements are represented schematically in accordance with ISA S5.1 and S5.3. The nomenclature, tag numbers, equipment numbers, panel numbers, and related series identification contained in the Contract Documents shall be employed exclusively throughout submittals.
19. Certifications:
    a) Documentation verifying that calibration equipment is certified with NIST traceability.
    b) Approvals from independent testing laboratories or approval agencies, such as UL, FM or CSA. Certification documentation is required for all equipment for which the specifications require independent agency approval.
20. Testing and quality control reports.

D. Programming technical data including:
    1. Annotated hard copies of PLC software programs.

a) Submit program for logic in ladder diagram format as used for the specific PLC system. Annotate program listing to include the following:
   i. Written description of each rung's function.
   ii. Reference to control loop number for each rung where applicable.
   iii. Reference to instrumentation tag number of I/O devices for each rung where applicable.
b) Provide written descriptions completely defining all function blocks and ladder logic used in program.
c) Provide list of all addresses referenced in logic diagram with description of data associated with each address.

2. Results of factory testing procedures.
3. Arrangement drawings for PLC system components.
4. Panel and enclosure plans, sections and details.
5. Access opening locations and required clearances for each panel and enclosure.
6. Enclosure internal wiring and terminal blocks.
7. Full size diagrams of all process control displays with identification of actual colors.
8. Index of all training offered by PLC system equipment manufacturers including operations and maintenance.
9. List of all recommended spares for maintenance purposes with each item separately priced.

E. Certifications.
1. Qualifications of installation supervisor.
2. Qualifications of programmer(s).

1.7 OPERATION AND MAINTENANCE MANUALS

A. See Section 26 00 00.

B. The Control System Integrator shall prepare and assemble detailed operation and maintenance manuals in accordance with the project general requirements. The manuals shall include, but not be limited to, the following:
1. Preventative maintenance procedures
2. Trouble-shooting
3. Calibration
4. Testing
5. Replacement of components
6. Automatic mode operation
7. Manual mode operation
8. Standard operator procedure (SOP) including detailed explanation of all OIT/HMI screens
9. Programming
10. System schematics / shop drawings
11. Electronic copy on disk of all shop drawings in AUTOCAD version 2021
12. As-built wiring diagrams of cabinet and enclosure contained assemblies
13. As-built wiring diagrams of overall system

C. Updated system schematics and wiring diagrams shall be included as described in the Shop Drawing and Submittal sections of this specification.
1. Catalog data and complete parts list for all equipment and control devices
2. Listing of recommended spare parts

3. Listing of recommended maintenance tools and equipment.

D. Program documentation printout with tag numbers and descriptive comments.

E. Electronic backup program flash drive.

1.8 DELIVERY, STORAGE, AND HANDLING

A. See Section 26 00 00.

PART 2 PRODUCTS

2.1 GENERAL

A. Design and Assembly

1. All equipment and materials utilized in the system shall be the products of reputable, experienced manufacturers with at least five (5) years experience in the manufacture of similar equipment. Similar items in the system shall be the products of the same manufacturer. All equipment shall be of industrial grade and of standard construction, shall be capable of long, reliable, trouble-free service, and shall be specifically intended for control and monitoring of operation of motor-driven pumps and equipment. All equipment shall be of modular design to facilitate interchangeability of parts and to assure ease of servicing. All equipment, where practical, shall be of solid state, integrated circuit design.
2. The system shall be completely assembled in the shop by the Control System Integrator. All components and equipment shall be prewired to the maximum extent possible.
3. All components, including both internally and face-mounted instruments and devices, shall be clearly identified with phenolic nameplates of white background with black letters. Nameplates on the interior of panels shall be White Polyester with printed thermal transfer lettering and permanent pressure sensitive acrylic; TYTON 822 or equal.

B. Interconnecting Wiring/terminals

1. See Section 26 05 19.
2. The Control System Integrator shall determine all requirements for field-installed interconnecting wiring between control system components, sensors, pumps and equipment. The Control System Integrator shall determine the number, size, and type of wires and the number, size, type, and location of conduits and wireways.
3. The wire and conduit shown on the plans shall be considered only as general guidelines for signal and control circuits. The Control System Integrator shall determine all specific requirements and shall confirm or modify the wiring and conduit shown on the plans to conform to such requirements.
4. All interconnecting wires installed by the manufacturer and installer shall be numbered at each end using custom pre-printed heat shrink sleeve markers. Terminations shall be made using solderless pressure connectors at all terminations. All conductors shall be stranded wire with thermoplastic insulation and shall be cabled to groups and supported so as to prevent breaking and to present an orderly arrangement and neat appearance. All outgoing wiring shall be terminated on a marked terminal strip capable of connection of at least 2 No. 14 wires and all terminal connections shall be numbered consecutively throughout the system.
5. Provide 5 spare terminals in each enclosure that has terminals or 10% whichever is the greater amount. In addition, provide extra DIN rail with enough space for 20% more terminals.
6. For all energized circuits (power and control) powered from the panel and extend outside of the panel provide an individual fused terminal with appropriate fast blow fuse. Provide

one fused terminal for each group of digital inputs associated with the control of a motor load.

7. (1/2 amp for PLC inputs) and “blown fuse” indicator light for each circuit.
8. For all signal circuits that extend outside of the panel provide an individual fused terminal with appropriate fusing and integral blown fuse indication. All 4 to 20 mA circuits shall be individually fused with a 1/16 amp fast blow fuse.
9. For all energized circuits powered outside of the panel which extend into the panel, provide a disconnecting terminal to isolate each individual circuit.
10. In general all control wiring shall be #14 AWG except PLC I/O wiring between the PLC cards and the terminal strips within the same cabinet shall be #18 AWG.
11. Provide wire ways as necessary in the enclosure to contain all internal wiring and all field wiring. Size wireways such that there is ample room for the wiring required by this contract. Wireways shall be filled to a maximum of 70% to allow 30% more future wire.
12. Low voltage DC control and signal conductors shall be bundled separately from alternating current circuits. Separate raceways and wire gutters shall be dedicated for AC and DC wiring, and labeled as such on the shop drawings. Wiring may cross at right angles if necessary. Special caution shall be used for PLC I/O card wiring and field terminations to accommodate the separation of AC and DC circuits. Intrinsically safe wiring shall be physically separated from non intrinsically safe wiring.
13. All wiring shall be neatly tied in position with nylon cable ties. Instruments with portable cord connections shall be fed through the instrument panel plug strip which shall be located near the top of the panel directly above the instruments. Instrument supply cords shall be the only panel wiring which is not continuously supported and tied.
14. All wiring and tubing crossing hinges shall be installed in a manner to prevent chafing. Bundles of similar conductors shall be clamped securely to the door and to the panel, and the bundles shall run parallel to the hinge for at least 12 inches. Spiral nylon cable wrap shall be provided in the hinge section of the bundle to fully protect the conductors or tubing against chafing.

2.2 PROGRAMMABLE CONTROL EQUIPMENT

A. Programmable Logic Controllers (PLC’s)

1. The controllers (PLC’s) shall be an industrial-grade, microprocessor-based unit capable of accepting inputs from discrete (single point), analog, high speed pulse, parallel BCD coded TTL and serial data sources. The controller shall execute user-entered logic instructions from memory and perform output functions as required by the logic instructions to discrete, analog, parallel and serial data outputs. The central processor unit (CPU) shall not require the use of external storage devices (i.e., disk drives) to execute logic instructions. All memory shall have retentive capability for a period of at least six months, through use of batteries. The controller shall be fully modular in design and have a slide-in card cage for easy field upgrades or card replacement.
2. The CPU shall plug directly into the I/O rack and require no additional wiring to the rack, power supply or the local I/O system. The unit will have indicators on the front that monitor the controller operation, the battery, the status and the CPU's mode of operation.
   a) Memory - The standard user program storage medium shall consist of battery-backed CMOS RAM (random access memory), with EEPROM and EPROM program storage offered as an option. Under normal operating conditions, the RAM shall retain a program for no less than six months in the event of power failure. Each scan cycle shall allocate time to update I/O, execute the program, communicate with special function I/O modules and execute specific task requests. Only the portion of memory utilized by the user program shall be scanned, while un-programmed memory will be skipped. through the instruction set, it shall be possible to skip portions of the user program that is not active every scan.

b) Relays and Registers - The processor shall be equipped with internal relays and shall be capable of employing Master Control Relays to perform program control functions. The processor shall contain memory registers capable of storing a hex, binary or decimal value (0-9999). It shall be possible to enter data into a storage register in either binary, decimal or hexadecimal form. It shall be possible to transfer large blocks of data from one storage register to another using a single programming instruction.

c) Math and Data Functions - A single programming instruction shall perform a Binary-to-BCD or BCD-to-Binary conversion. Math functions shall include addition, subtraction, multiplication, division and square root capable of generating an answer in the range of 9999 to +9999. In the event these limits are exceeded, an overflow bit will be set, indicating that numerical conditioning is necessary to generate an accurate result.

d) Timers and Counters - The controller shall have the capability of programming counters and/or timers. Each counter and timer shall be capable of storing a decimal value. Timers shall have a selectable time base of 1 millisecond or 1/10th (.10) second decrements. There shall be one instruction that counts (up or down) between zero and 9999.

e) Programming - There shall be a programming device available that allows on-and-off-line programming capability. The software provided with the device shall offer documentation in comment and label form.

f) High-level instructions shall provide Boolean word operations of AND, OR, exclusive OR and comparison. Instructions to perform bit manipulation of user memory (bit set, clear, pick, etc.) shall be available for user programming. I/O register, word and table instructions shall be provided which include: moves to and from tables, AND's, OR's, complement, compare and search.

g) Ladder logic documentation shall consist of one comment block for each output coil and a synonym for each contact or output coil. Each comment block shall allow up to 16 lines of text (60 characters/line). Synonyms shall consist of a minimum of 27 characters (3 nine-character lines). The I/O documentation shall display on a rack-by-rack basis what type module is in each slot and the synonym for each I/O point. All documentation shall be able to be printed out for reference variable memory documentation, program title.)

h) PID Capabilities - The CPU shall have the capability to perform up to 64 Proportional-Integral-Derivative (PID) loops. Programming shall be simple fill-in-the-blanks of a pre-defined menu. The menu shall be self-documenting, and the user shall be able to easily obtain a hard copy. PID shall be either a velocity or position algorithm in normal or cascade format. Clamp setpoint limits shall prevent unauthorized change of setpoint beyond specified limits. Derivation gain limiting shall help stabilize loops with run-away characteristics. Four levels of process variable alarms, broken transmitter, and PV rate-of-change alarms shall be provided. There shall exist the capability to ramp/soak setpoints in user-defined steps. Ability to freeze bias if output is out of range shall exist. User shall have ability to use special function programming in conjunction with PID control. The controller shall provide loop status words which describe the state of the loop and which can be monitored from an operator interface or host device.

i) Programming Tools - Integrated software packages shall be available to provide programming, troubleshooting and documentation capabilities. This software package shall support ladder logic, a high level language and pre-configured fill-in-the-blank menus for PID control capability. Programming tools shall support both off-line and on-line programming in addition to the ability to obtain a hard copy print of all programming and configuration.

j) Standards Regulatory Agency - The CPU and associated racks, power supplies and I/O modules shall have major approvals including UL and CSA Certification. Environmental and noise immunity ratings shall conform to IEC65/W66SA.

k) Inputs and Outputs - The system shall have the capacity to accommodate no less than 1024 inputs or outputs in increments of eight, sixteen and thirty-two. Modules and their rack assemblies shall contain all circuitry for interfacing inputs and outputs to the controller. The CPU shall allow user-configurable I/O mapping. I/O modules shall be able to be plugged into any location of any I/O base.

l) Provide 10 spare DI or 10%, and 10 spare DO or 10% whichever is the greater amount. Provide 1 spare AI and 1 spare AO or 10% whichever is the greater amount.

m) Racks shall be available in a variety of sizes. I/O bases shall be capable of handling four, eight or sixteen modules (128, 256 or 512 I/O points). The I/O rack assemblies will provide mounting slots for the processor, power supply and I/O modules.

n) Provide 2 spare open slots or 20% whichever is the greater amount.

o) Communications - There shall be special function/intelligent I/O modules that provide network, peer-to-peer communications and able to provide BASIC programming module.

p) Provide spare open slots as shown on the drawings.

q) PLC shall be Allen-Bradley CompactLogix (5000 series) system complete, or equal.

B. Programming of Programmable Controller

1. Programming software shall be provided as part of the control system to enable modification of existing programs and creation of new programs for the programmable controller through a microprocessor-based computer. All ladder-diagram logic shall be displayable on the computer monitor and the program shall enable on-screen editing of the logic. The program shall allow either on-line or off-line programming of logic as desired by the operator. The program shall allow ladder-diagram logic to be down-loaded from the programmable controller to the computer and up-loaded from the computer to the programmable controller and shall provide documentation of logic, including labels, through the computer printer. All timer and setpoint values in the ladder-diagram logic shall be accessible and adjustable through the computer monitor and keyboard.

C. Support Equipment and Software

a) PLC programming software provided by PLC manufacturer (or other approved programming package). PLC programming software shall be the latest released version of Windows based software.

D. Equipment Enclosures

1. Sizes of enclosures shown on the drawings are minimum – Integrator shall upsize the enclosures for the installed components as necessary If approved by the Engineer and the larger enclosure will fit within the space dedicated to the enclosure.

E. Control Cabinets

1. Control cabinets installed in indoors in dry areas, non-corrosive areas shall be NEMA 4 – steel construction.
2. Cabinets shall be hinged with stainless steel pins.
3. Provide all control cabinets with a data pocket and insert the cabinet drawings in the pocket when shipped to the site.
4. Provide all control cabinets which house PLC equipment with a 12”x12” folding shelf HOFFMAN A-CSHELF12 or equal
5. Provide corrosion inhibitors in all control cabinets prior to shipping. Amount of inhibitor shall be provided for the volume of the enclosure for one year. HOFFMAN AHC series or equal.

6. Enclosure shall be manufactured by Hoffman Products, Inc. or equal.

F. Enclosures, Boxes And Hand Stations
   1. All terminal, pull, & junction boxes and control stations:
      a) Installed indoor in dry areas shall be NEMA 12 non-metallic.
      b) installed in damp, or corrosive or outdoor areas shall be NEMA 4X non-metallic construction with.
         - Aluminum or stainless steel construction may be used for enclosures that are too large for non-metallic.
         - Screws, bolts, and other hardware shall be stainless steel
         - The hinges shall have stainless steel pins
      c) Provide with hinges when available. All enclosures with covers more than 1sq foot total area shall be hinged.
      d) Enclosure shall be manufactured by Hoffman, Inc. or equal.

G. Enclosure Door Latches
   1. Door latches shall be fast operating type 3-point latch door handle; or where a 3-point latch will not meet rating requirements use fast operating clamp assembles. Hoffman Bulletin A-80. The latch handle shall operate toward the center of the panel to open the door, and be pointing down when closed. All enclosures shall have a maximum of (2) two latches. Enclosures with more than 2 latches are not acceptable.
   2. Small boxes and control stations shall have 2 screw driver or hand operated latches.

H. Folding Shelf / Door Stop
   1. Provide a 12”x12” folding shelf on the inside of the door to all cabinets with remote I/O or PLC’s for supporting a laptop computer. Hoffman A-CSHELF12 or equal.
      a) Mount the shelf so that when the cabinet is installed, the shelf will be 42”–46” above the floor.
   2. On all cabinet doors with a folding shelf, provide a doorstop mounted at the top of the cabinet. Hoffman A-DSTOPK.

I. Wireways
   1. Provide molded plastic wireways, slotted for wire connections for all wiring in the panels. They shall be complete with covers. Wireways shall be manufactured by Panduit or Taylor.

J. Terminals
   1. Provide terminals for all wire connections to field wiring and internal power distribution. Analog loops that are 24 VDC powered shall have a knife switch to disable the loop if necessary. Connections shall have box type lugs capable of terminating 2 #14 AWG stranded wires. Terminals shall be strip mounted as manufactured by Phoenix Contact or equal.
   2. Provide terminals on a 1-1/2” raised track in control cabinets. Track shall be aluminum and bonded to the cabinet.
   3. Fuse terminal blocks shall be hinged disconnect level type with “blown fuse” indicators. PHOENIX CONTACT UK 5 series or equal.
   4. Disconnecting terminal blocks shall be knife type with light indicator PHOENIX CONTACT type MTK or equal.
   5. Provide 1 spare, or 3% whichever is the greater amount, spare (noninstalled) replacement terminals for each type used.

K. Forced Air Heater
   1. Provide a fan-driven resistance heater with 120 VAC line thermostat in each control enclosure which houses instruments, relays, PLC’s, starters, or other solid state devices;

located outdoors or in moist environments. The thermostat shall be adjustable between 40°F. and 80°F. Provide correct wattage and voltage for the required application. Heater shall be Hoffman bulletin D-85 D-AH series or equal.

L. Panel Light, Switch and Convenience Outlet

1. Provide a light with automatic “door activated” switch in control panels that contain a PLC rack, relays, or other equipment that would require troubleshooting or operator access for normal operation. Provide a duplex outlet, 120VAC 15A, in all panels that require a computer or other maintenance tools that may need a power source. These shall be on a separate dedicated circuit.

2.3 PANEL POWER DISTRIBUTION

A. Control Panel Circuit Breakers

1. Control panel circuit breakers shall be thermal-magnetic type, supplementary overcurrent devices. Circuit breakers shall be snap mountable on five different types of mounting rails. Circuit breakers shall be sized for actual circuit load. or as shown on the drawings. Provide 1 spare circuit breaker of each size used, or the number of spares shown on the drawings, whichever is greater.
2. Control panel circuit breakers shall be Allen-Bradley 1492-CB or 1492-GH, or equal.

B. Fuses

1. Provide fuses, spares, fuse pullers, and etc. in accordance to Section 26 28 00.
2. Provide blown fuse indicators on all fuses.

C. Power Supplies

1. Power supplies for 24 VDC and 12 VDC power shall be linear type, sized to be able to supply the demand. The power supply for the current loops shall be separate from the other DC loads. Units shall be open frame type and have overvoltage and overcurrent protection. Acceptable manufacturers are Allen-Bradley, SOLA, Schneider Electric or approved equal.

D. Transient Voltage Surge Suppresser

1. Provide a surge suppressor, with indicator, in the control panel(s) to protect against overvoltage transients. Unit shall have a 120 VAC service voltage rating, a 500V peak maximum voltage protection level, a maximum surge current rating of 10,000 Amps and a response time of less than 5 nanoseconds. Unit shall be provided with electrically isolated contact closure for remote status monitoring of suppressor. Surge suppressor shall be Transtector I2R IEP, or equal.

E. Uninterruptible Power Supply (UPS)

1. The uninterruptible power supply (UPS) to be installed shall be a continuously on-line type or have a transfer time of less than 1 millisecond. Unit shall be sized to operate on a 30 Amp 120 VAC 60 Hz. feeder and maintain 120 VAC load on battery backup for 10 minutes. Unit shall be shelf mounted and cord and plug wired to control system power. The UPS size shall be chosen by the Hardware System Integrator for the connected load shown on the drawings plus 30%.
2. UPS shall include built in transient voltage surge suppresser (UL 1449) with a THD less than 5% at full load, for clean power to the PLC, power supplies and other power sensitive equipment. UPS shall include user interface with indication of battery condition, capacity and programmable operating parameters. Provide battery replacement warning. Acceptable manufacturers are Schneider or equal.

2.4 OPERATOR INTERFACE DEVICES

A. All operator interface devices mounted on the panel front shall be rated for the environment in which they will be located. In general, devices mounted on indoor panels shall be NEMA 13

rated. Operator devices mounted outdoors, or in wet or corrosive environments shall be NEMA 4X rated.

B. Panel Mounted HMI:
   1. 10” color touchscreen.
   2. Provide manufacturer’s recommended programming software.
   3. Allen-Bradley PanelView Plus 7, performance terminal, or equal.

2.5 RELAYS

A. Relays For General Purpose
   1. Relays for general purpose use shall have, 10 Amp contacts with the appropriate coil voltage for the application. All relays shall have an integral indicating light to show if there is coil voltage present. They shall have an 8-pin/blade base and matching socket. Units shall be Allen-Bradley 700 type HA, HB, Idec RH Series, or equal. Appropriate relay shall be selected based on application from the control wiring diagrams.

B. Time Delay Relays
   1. Time delay relays shall be multi-function, multi-range with plug-in base, pin style terminations timing and timed out LED indicators, and calibrated scales. Relays shall have minimum 0.5 seconds to 60 minutes, 8 selectable timing ranges, 5 amp contacts. Select coil voltage for the application. Minimum accuracy requirements (plus or minus) shall be as follows: 1) Repeat accuracy 1/2% 2) Timing change over full voltage range 1/2% change over full temperature range 2% 3) Scale tolerance 5%. Allen-Bradley Bulletin 700 type HR series; IDEC, GT3A or approved equal. Appropriate relay shall be selected based on application from the control wiring diagrams.

2.6 SIGNAL CONDITIONERS

A. Current to Current Converters
   1. The current to current (I/I) converters shall provide an isolated DC output proportional to the DC input while providing complete electrical isolation between the output and input. The device shall plug into a standard 8-pin relay socket which is capable of being mounted either on a flat surface or track. Provide appropriate scaling as required. Units shall be as manufactured by Wilkerson Instruments, or Action Instruments.

2.7 SPARE PARTS

A. In addition to spare parts mentioned elsewhere in this section, the Contractor shall supply the following spare parts for use by the Owner:
   1. Qty 1 16 pt Digital input module
   2. Qty 1 16 pt Digital output module
   3. Qty 1 8 pt Analog input module
   4. Qty 1 8 pt Analog output module
   5. Install new batteries in all PLCs at startup.
   6. Qty 1 Relay of each type used or 10 % whichever is the greater amount
   7. Qty 10 lamps of each type used or 100% whichever is the greater amount.
   8. Qty 200% spare fuses (two spare fuses for each fuse supplied)
   9. Provide 10 spare nameplates 3” square or less with 20 letters 1/2” or less to be specified by the Owner.

B. Spare parts shall be shipped with the control panels.

PART 3 EXECUTION

3.1 OPERATING DEVICE LOCATION

A. Operating devices shall be mounted no higher than 6' - 4" and no lower than 4' - 0" above finished floor when panel is installed unless otherwise approved by the Engineer. Operating devices with displays (such as PLC interface and power monitoring devices) shall be mounted so that the display is between 5’-3” and 5’-8” above finished floor unless otherwise approved by the Engineer.

B. All pipe mounted pressure monitoring devices shall be installed along with air bleed valves consistent with control device manufacturer recommendations in order to remove unwanted air from the system that may interfere with proper device operation.

3.2 PLC SYSTEM APPLICATION SPECIFIC PROGRAMMING

A. Application specific programming software shall be provided as part of the control system to enable modification of existing programs and creation of new programs for the PLC through a microprocessor-based computer. All timer and setpoint values in the control logic shall be accessible and adjustable through the PLC operator interface.

B. The application specific PLC program shall be written in a functional “subprogram” format that divides the program into logical process control sections. As an example, the program shall contain control sections for

1. Communications handling
2. Analog input monitoring
3. Discrete input monitoring
4. Pump control and monitoring
5. Valve control and monitoring
6. Blower control and monitoring
7. System calculations (pump starts and runtimes, flow totals, etc)
8. Data logging
9. System alarming

C. Refer to Section 40 70 00 for additional information.

3.2.1 ELAPSED TIME METERS

A. Elapsed run timers shall be provided for all pumps, blowers and motors that are controlled or monitored by the PLC. These timers shall reside in the PLC, and their values shall be displayed on the PLC operator interface.

3.2.2 START COUNTERS

A. Start counters shall be provided for all pumps, blowers and motors that are controlled or monitored by the PLC. These counters shall reside in the PLC, and their values shall be displayed on the PLC operator interface.

3.2.3 EQUIPMENT STATUS

A. All facility equipment and process sequences that are controlled from, or monitored by the PLC shall have their associated status displayed on the PLC operator interface.

3.2.4 EQUIPMENT AUTO MODE FEEDBACK

A. All equipment and sequences with automatic control modes shall report to the PLC when their respective control switch is in the AUTO position. The AUTO status shall be displayed on the PLC operator interface.

3.2.5 EQUIPMENT FAILURE DETECTION

A. All process equipment and sequences controlled through the PLC shall be monitored for failure. The failure routine shall be based on a command/report back sequence. This sequence shall activate a failure alarm if the process equipment ON status signal is not received by the PLC within a timeout period after the PLC issues the RUN command. All failure alarms shall be displayed on the PLC operator interface.

3.2.6 PROCESS STATUS

A. All facility process values that are monitored by the PLC shall have their associated status displayed on the PLC operator interface.

3.2.7 PROCESS VARIABLE ALARMS

A. All facility process signals monitored by the PLC shall be monitored for high or low level and loss of signal alarms. The high or low level alarms shall have an adjustable deadband to prevent nuisance alarming. All process signal alarms shall be displayed on the PLC operator interface.

3.2.8 FLOW TOTALIZERS

A. All process flow variable data shall be totalized in the PLC and displayed on the PLC operator interface.

3.3 FACTORY TESTING

A. The Control System Integrator shall perform operational testing of the complete control system in their shop prior to the system being delivered to the project site. Testing shall be conducted in two phases. The initial testing of the control system shall include verification of the PLC system configuration followed by energizing and testing each digital input and output and simulating each analog input and output using a loop simulator and calibrator. Circuits not energized shall be tested for continuity. Energized circuits shall be tested through all components from the terminal blocks in the control panel to the hardware I/O memory locations in the PLC. Initial testing of the control system shall be considered completed only after the control system has operated continuously, 24 hours per day, for at least 2 days.

B. After completion of initial testing, the Control System Integrator shall conduct subsequent testing for witness and inspection by the Engineer. All control functions and all status and alarm monitoring and indication shall be demonstrated under simulated operating conditions. Simulating equipment shall be provided and wired into the control system for this testing. The Control System Integrator shall revise, modify, and adjust the system as required by the Engineer during the testing period. Testing shall be continued for the time period required by the Engineer to observe and verify proper operation of the control system and any necessary revisions required as a result of the witness testing.

C. The Control System integrator shall provide an I/O checklist for all points in the control panel. The list shall include for each point, the tag name of the points, a description of the point, comments, date and time of the test, and a signature line for the person performing the test. Show that each Digital point was set and reset. Show verification of all analog points at 0%, 25%, 50%, and 100% of range. The I/O checklist format shall be submitted Engineer for review and approval 1 week prior to the scheduled witness testing.

3.4 INSTALLATION

A. The control system panels and control equipment shall not be shipped to the site until a suitable environment is available for installation of the equipment. A suitable environment for the purposes of this contract for the control panels and motor control center shall be dry, covered and heated to maintain a minimum ambient temperature of 60°F. Prior to shipment

of control equipment, the Contractor shall contact the Engineer for field verification of a suitable environment.

B. The control system shall be installed in accordance with the installation drawings and instructions prepared by the Control System Integrator. Installation shall be performed by workers who are skilled and experienced in the installation of electrical instrumentation and control systems.

C. Installation shall include all elements and components of control system and all conduit and interconnecting wiring between all elements, components, sensors and valve operators. All wiring between control cabinets, sensors, pumps and equipment shall be multiple color coded for ease of servicing. All terminations shall be made with solderless pressure connectors. All wiring shall be in accordance with the requirements of Section 26 05 19. Intrinsically safe wiring shall be separated with barriers per NEC requirements.

3.5 FIELD TESTING OF THE CONTROL SYSTEM

A. The Control System Integrator and Electrical Contractor shall perform operational testing of the complete control system in the field. Testing shall be conducted in two phases. The initial testing shall include, but not be limited to, operation of all input and output (I/O) points, control devices and motor controls. Subsequent startup testing of the system shall include, but not be limited to, testing of the PLC and PLC operator interface programs.

B. The initial testing of the control system shall include testing of PLC system and its communications equipment, energizing each digital input and output and simulating each analog input and output using a loop simulator and calibrator. The I/O shall be tested in conjunction with the Electrical Contractor who is installing the instrumentation and control wiring. Circuits not energized shall be tested for continuity. Energized circuits shall be tested through all components from the field instrument to the hardware I/O memory locations in the PLC. If a point cannot be verified within 5 minutes of starting the check that point shall be noted as a punch list item to be corrected and re-tested at a later time.

C. The Control System integrator shall provide an I/O checklist for all points in the control panel. The list shall include for each point, the tag name of the points, a description of the point, comments, date and time of the test, and a signature line for the person performing the test. Show that each Digital point was set and reset. Show verification of all Analog points at 0%, 25%, 50%, and 100% of range. The Checklist shall be submitted to the Engineer 1 week prior to the startup of the control system. The Control System Integrator and the Electrical Contractor shall both be present for the verification of the I/O system by the Engineer.

D. The Control System Integrator shall coordinate with the contractor to ensure that control panels have been installed correctly prior to the commencement of the system startup. Startup testing shall not begin until the control panel installation has been completed and verified by the Engineer.

3.6 CALIBRATION AND START-UP

A. All components of the control system shall be calibrated by the Control System Integrator after completion of installation. Each component shall be adjusted to be within the manufacturer's required range and for the specific application.

B. Components that cannot be properly calibrated or that are found to exceed the manufacturer's specified range or accuracy shall be removed and replaced at no additional cost to the Owner.

C. The control system shall be placed into operation by the Control System Integrator.

D. All components shall be recorded on loop check-off forms and shall be witnessed tested by the Engineer or Owner’s representative.

3.7 SYSTEM VALIDATION

A. When the installation is substantially complete, the Contractor shall commence integration testing of the control system. This shall determine that all system components connect up correctly to each other so that the system works as designed.

B. The Control System Integrator shall calibrate all instruments, indicators, recorders, loops, etc. and fill out appropriate test forms provided at the end of this section. Test forms shall be received by the Engineer prior to validation testing.

C. After the integration testing is complete, validation testing shall be by the Control System Integrator and Contractor, with the Owner and Engineer present. Validation testing shall include operation and verification of all control components and features of the entire control system. The Contractor shall inform the Engineer of the testing schedule at least one week prior to the commencement of testing. Validation testing shall be considered complete when the Owner and Engineer have determined that all of the original system requirements have been met.

D. The manufacturer shall revise, modify, adjust and reprogram the system as required during and following start-up to provide the operation required by the Engineer.

E. Note: the Engineer shall not be called out by the Contractor for validation testing on equipment until all components are installed, all wiring points have been checked, and operation **has been** tested **and verified** by the Contractor.

3.8 SYSTEM MAINTENANCE

A. The Control System Integrator shall be solely and completely responsible for all maintenance of the hardware system from time of start-up to the date of acceptance, by formal action of the Owner, of all work under the contract. The Control System Integrator shall correct all deficiencies and defects and make any and all repairs, replacements, modifications, and adjustments as malfunctions or failures occur. The Control System Integrator shall perform all such work required or considered to be required by the Owner to cause and maintain proper operation of the system and to properly maintain the system.

B. The Contractor and the Control System Integrator shall anticipate that the Owner may delay acceptance of all work under the contract if, in the judgment of the Owner, malfunctions or failures in operation of the control system repeatedly occur after start-up. Both the Contractor and the Control System Integrator shall not be entitled to an extension of time or to any claim for damages because of hindrances, delays or complications caused by or resulting from delay by the Owner in accepting the work because of malfunctions or failures in operation of the control system.

3.9 OPERATION AND MAINTENANCE TRAINING

A. The Control System Integrator shall conduct specifically organized training sessions in operation and maintenance of the control system for personnel employed by the Owner. The training sessions shall be conducted to educate and train the personnel in maintenance and operation of all components of the control system. Training shall include, but not be limited to, the following:

1. Preventative maintenance procedures
2. Trouble-shooting
3. Calibration
4. Testing
5. Replacement of components
6. Automatic mode operation
7. Manual mode operation

B. At least 3 separate training sessions, each at least 4 hours in duration, shall be conducted at the facility after start-up of the system. The Control System Integrator shall prepare and assemble specific instruction materials for each training session and shall supply such materials to the Owner at least (2) weeks prior to the time of the training.

END OF SECTION

SECTION 26 90 22
PUMP CONTROL PANEL

PART 1 GENERAL

1.1 SECTION INCLUDES

A. Submittal, installation and testing requirements for:
   1. Packaged Simplex Pump Control Panels
   2. Packaged Duplex Pump Control Panels

1.2 DESCRIPTION OF WORK

A. This section covers the packaged pump control panels indicated on the drawings and specified herein. The control components shall be supplied and installed as an integrated system which includes all accessories necessary for operation.

B. The pump control panel shall be designed and assembled to:
   1. Be an integrated system composed of components which are specifically designed and used for control and operation of pumping equipment and which are standard, catalog listed products.
   2. Provide the capabilities indicated and implied by the specifications and such additional capabilities as may be necessary for proper operation of the pumps and pump station equipment.

C. Refer to Packaged System Equipment Specifications for product specification.
   1. Any specified equipment that is redundant to Packaged System specification is for evaluating compliance of submitted equals.

1.3 RELATED SECTIONS

A. Related Sections include but are not necessarily limited to:
   1. Section 06000 – Effluent Sewer Equipment Specifications
   2. Section 26 60 00 – Electrical General Provisions
   3. Section 26 00 01 – Electrical Scope of Work
   4. Section 26 60 02 – Basic Materials and Methods
   5. Section 26 05 19 – Wire and Cable
   6. Section 26 70 00 – Motors
   7. Section 26 01 26 – Electrical testing

1.4 STANDARDS AND REFERENCES

A. All materials and equipment specified herein shall within the scope of UL Examination Services, be approved by the Underwriter's Laboratories for the purpose for which they are used and shall bear the UL label.

B. All equipment and materials shall conform to the latest revised editions of applicable standards published by the following organizations:
   1. American National Standards Institute (ANSI).
   2. Institute of Electrical and Electronic Engineers (IEEE).
   3. National Electrical Manufacturers Association (NEMA).

4. Underwriters' Laboratories (U/L).
5. Instrument Society of America (ISA).

C. All materials and equipment specified herein and their installation methods shall conform to the latest published version of the National Electrical Code, NEC.

D. All control panels shall bear a label by an approved testing authority for the completed assembled panel.

1.5 SUBMITTALS

A. Shop Drawings
   1. See Section 26 00 00.

B. The pump control panel manufacturer shall develop all shop drawings required for design, fabrication, assembly and installation of the control system. Shop drawings shall include all drawings required in manufacture of specialized components and for assembly and installation of them. Shop drawings shall be CAD drawn and include the following:
   1. System schematic diagrams for the entire pump control panel including, but not limited to: all sensors, control panels components, and motor control equipment; with all components and their locations indicated. Wire and terminal numbers shall be included on the schematic diagrams.
   2. Technical data sheets for all components with the complete part number of the component clearly designated with all required options.
   3. Arrangement drawings of all panel front and internal-mounted instruments, switches, devices, and equipment indicated. Show all panel mounting details required. Include outer dimensions of all panels on the drawing. Deviations from approved arrangements require re-submittal and approval prior to installation.
   4. Arrangement drawings shall be drawn to scale using standard Architectural or Engineering scales.
   5. Detailed dimensional drawings of the installation of all sensors (level, etc.) and of mounting brackets and other devices required for installation of sensors.
   6. Shop drawings shall be provided on sheets no larger that 11” X 17”. Shop drawings shall include specific product detail such as rating, size, and number of contacts, etc. Wiring diagrams shall be included for all components in the system including control equipment supplied with mechanical devices.
   7. Installation details shall include the size, number, type and location of interconnecting wiring and conduit, installation of cabinets and enclosures, installation of sensors, instruments, limit switches, and other installation requirements. Shop drawings shall be submitted to the Contractor for review and approval. After approval by the Contractor, copies of all shop drawings shall be submitted to the Engineer.

C. Descriptive text on wire markers to be used.

D. Cut sheets for all products with a bill of materials showing quantity, manufacturer, catalog number, and the supplier name and phone number. Relate the bill of materials to the submitted product index.

E. Explanatory text which describes in detail the operation of the entire control system and all components.

1.6 OPERATION AND MAINTENANCE DATA

A. The manufacturer of the pump control panel shall prepare and assemble detailed operation and maintenance manuals in accordance with the requirements of Section 26 60 00. The manuals shall include, but not limited to the following:
   1. Preventative maintenance procedures

2. Trouble-shooting
3. Calibration
4. Testing
5. Replacement of components
6. Automatic mode operation
7. Manual mode operation
8. System schematics
9. As-built wiring diagrams
10. Catalog data and complete parts list for all equipment and control devices
11. Listing of recommended spare parts
12. Listing of recommended maintenance tools and equipment

1.7 DELIVERY, STORAGE, AND HANDLING

A. See Section 26 00 00.

1.8 RESPONSIBILITY OF CONTRACTOR & PUMP CONTROL SYSTEM VENDOR

A. The manufacturer of the pump control panel shall be fully and completely responsible for the design and assembly of the system as specified herein. The assignment of specific responsibilities herein to the manufacturer shall not, in any way and under any conditions, diminish or usurp the Contractor's full and complete responsibility for all work performed and all materials installed under the contract. The system shall be designed to provide the control capabilities and functions indicated and implied by these specifications and to provide trouble-free operation with minimum maintenance. The system shall readily enable manual operation of any and all functions in the event of failure of any one component.

B. The Contractor shall be solely and completely responsible for coordination and integration of pump control panel with the control system and other related equipment. The Contractor shall communicate directly with the manufacturer(s) and supplier(s) of all related equipment to determine all intended details of the equipment which may influence or affect the control system. The Contractor shall determine all requirements for and shall cause integration of the control system and all other control equipment into a unified operating system. The Contractor shall define all requirements for all interfacing equipment and shall supply all appurtenances, accessories and all such devices which may be required for proper interfacing as part of the control system.

C. The Contractor shall be responsible to obtain submittal information on equipment which may be supplied by other disciplines and to integrate them into the control system to form a complete working package as outlined by the contract documents. This includes but is not limited to the following list of major pieces of equipment:
   1. Pumps
   2. Power distribution panels and equipment

1.9 WARRANTY

A. In accordance with the general requirements of these specifications, the Contractor shall guarantee the control system to be free of defects in design, materials and workmanship for a period of one (1) year following the date of acceptance, by formal action of the Owner, of all work under the contract.

B. As part of the guarantee, the Contractor and the manufacturer of the pump control panel shall indemnify and hold harmless the Owner, the consultant and their officers, agents and employees against and from all claims and liability arising from all damage and injury due to defects in the control system.

C. The Contractor shall cause the manufacturer of the pump control panel to make any and all repairs, replacements, modifications and adjustments within thirty-six (36) hours of notification. Should the manufacturer fail to begin the work within twelve (12) hours or complete the work within thirty-six (36) hours, the Owner may proceed to undertake or complete the work. In such event, the Contractor and his surety shall be liable for all costs incurred by the Owner.

PART 2 PRODUCTS

2.1 NOT USED

PART 3 EXECUTION

3.1 FACTORY TESTING

A. Operation of the pump control panel shall be tested at the factory by the Manufacturer. Testing shall be conducted in two phases. The initial testing shall include, but not be limited to, operation of all input and output sensor and control equipment. The subsequent testing shall include, but not be limited to, powering motor controllers with rated incoming voltage.

B. All control functions and all status and alarm monitoring and indication shall be demonstrated under simulated operating conditions. Simulating equipment shall be provided and wired into the control system for this testing. Testing shall be continued for the time period required to observe and verify proper operation.

3.2 INSTALLATION

A. The pump control panel shall be installed by the Contractor or, at the option of the Contractor, by the manufacturer of the pump control panel in accordance with the installation drawings and instructions prepared by the manufacturer. Installation shall be performed by workers who are skilled and experienced in the installation of electrical instrumentation and control systems.

B. Installation shall include all elements and components of the panel and all interconnecting wiring between all equipment, components, and sensors. All wiring between panels, sensors and equipment shall be labeled at both ends for ease of servicing. All terminations shall be made with solderless pressure connectors. All wiring shall be in accordance with the requirements of Section 26 05 19.

3.3 INSPECTION AND VERIFICATION OF INSTALLATION

A. After completion of the installation of the panel, the Owner (and/or Engineer) shall inspect the installation and verify that all components and wiring are correctly installed. The Owner (and/or Engineer) shall determine the exact scope and nature of work required to correct deficiencies and errors in the work and shall supervise the performance of such work.

3.4 CALIBRATION AND START-UP

A. All components of the panel shall be calibrated by the Contractor after completion of installation. Each component shall be adjusted to be within the required range and for the specific application. Components that cannot be properly calibrated or that are found to exceed the specified range or accuracy shall be removed and replaced.

B. After completion of construction of the pump station, the panel shall be placed into operation by the Contractor.

C. The Contractor shall be required to demonstrate the complete operation electrically and mechanically of the duplex alternating pump system including removal of the pumps, reinstallation of the pumps, and operation with the Owner's portable generator.

D. The Contractor shall be solely and completely responsible for all maintenance of the system from time of start-up to the date of acceptance, by formal action of the Owner, of all work under the contract. The Contractor shall correct all deficiencies and defects and make any and all repairs, replacements, modifications, and adjustments as malfunctions or failures occur. The Contractor shall perform all such work required or considered to be required by the Owner to cause and maintain proper operation of the system and to properly maintain the systems.

E. The Contractor and the manufacturer of the power control panel shall anticipate that the Owner may delay acceptance of all work under the contract if, in the judgment of the Owner, malfunctions or failures in operation of the panel occur after start-up. Both the Contractor and the manufacturer shall not be entitled to an extension of time or to any claim for damages because of hindrances, delays or complications caused by or resulting from delay by the Owner in accepting the work because of malfunctions or failures in operation of the panel.

3.5 OPERATION AND MAINTENANCE TRAINING AND DOCUMENTATION

A. The Contractor shall conduct specifically organized training sessions in operation and maintenance of the panel for personnel employed by the Owner. The training sessions shall be conducted to educate and train the personnel in maintenance and operation of all components of the panel. Training shall include, but not be limited to, the following:

1. Preventative maintenance procedures
2. Trouble-shooting
3. Calibration
4. Testing
5. Replacement of components
6. Automatic mode operation
7. Manual mode operation

B. One (1) separate training session at least four (4) hours in duration, shall be conducted at the individual types pump station (after start-up of the system) concerning instruction and operation of the pump control panels, and all associated electrical equipment and devices. The manufacturer shall prepare and assemble specific instruction materials for each training session and shall supply such materials to the Owner at least two (2) weeks prior to the time of the training.

END OF SECTION

SECTION 26 90 25
CONTROL COMPONENTS

PART 1 GENERAL

1.1 SECTION INCLUDES

A. Installation requirements for:
   1. Instrumentation

1.2 DESCRIPTION OF WORK

A. This section covers installing equipment used for monitoring, control and operation of motor-driven pumps, blowers and equipment.

B. The control system shall include the control devices, sensors, interfacing devices, cabinets, enclosures and other components indicated and implied by the Plans and these Specifications, and to provide trouble-free operation with minimum maintenance.

C. The Contractor shall supply all interfacing equipment, appurtenances and accessories and all such devices that may be required for proper interfacing as part of the control system.

1.3 RELATED SECTIONS

A. Related Sections include but are not necessarily limited to:
   1. Section 06000 – Effluent Sewer Equipment Specifications
   2. Section 26 00 00 – Electrical General Provisions
   3. Section 26 00 01 – Electrical Scope of Work
   4. Section 26 01 26 – Electrical Testing
   5. Section 26 29 13 – Enclosed Controllers
   6. Section 26 90 21 – Control System
   7. Section 26 90 22 – Pump Control Panel
   8. Section 40 05 50 – Process Valves and Actuators
   9. Section 40 70 00 – Process Instrumentation and Functions

1.4 STANDARDS AND REFERENCES

A. All materials and equipment specified herein shall within the scope of UL Examination Services, be approved by the Underwriter's Laboratories for the purpose for which they are used and shall bear the UL label.

B. All materials and equipment specified herein shall conform with all applicable NEMA, ANSI and IEEE Standards

C. All materials and equipment specified herein and their installation methods shall conform to the latest published version of the National Electrical Code, NEC.

1.5 SUBMITTALS

A. Shop Drawings
   1. See Section 26 00 00.

1.6 DELIVERY, STORAGE, AND HANDLING

A. See Section 26 00 00.

1.7 COORDINATION WITH MOTOR CONTROLS AND OTHER EQUIPMENT

A. The Contractor shall be solely and completely responsible for coordination and integration of control system with the motor control and other related equipment. The Contractor shall communicate directly with the Manufacturer(s) and supplier(s) of all related control equipment to determine all intended details of the equipment, which may influence or affect the control system. The Contractor shall determine all requirements for and shall cause integration of the control system and all other control equipment into a unified operating system. The Contractor shall define all requirements for all interfacing equipment and shall supply all appurtenances, accessories and all such devices, which may be required for proper interfacing as part of the control system.

PART 2 PRODUCTS

2.1 NOT USED

PART 3 EXECUTION

3.1 OPERATING DEVICE LOCATION

A. Operating devices shall be mounted no higher than 6'-6" and no lower than 4'-0" above finished floor when panel is installed unless otherwise approved by the Engineer. Operating devices with displays shall be mounted so that the display is between 5’-3” and 6’-0” above finished floor unless otherwise approved by the Engineer.

3.2 INSTALLATION

A. The control system shall be installed in accordance with the installation drawings and instructions prepared by the Contractor. Installation shall be performed by workers who are skilled and experienced in the installation of electrical instrumentation and control systems.

B. Installation shall include all elements and components of control system and all conduit and interconnecting wiring between all elements, components, sensors and valve operators. All wiring between cabinets, sensors, pumps, blowers and equipment shall be multiple color coded for ease of servicing. All terminations shall be made with solderless pressure connectors.

3.3 CALIBRATION AND START-UP

A. All components of the control system shall be calibrated by the Contractor after completion of installation. Each component shall be adjusted to be within the Manufacturer's required range and for the specific application.

B. Components that cannot be properly calibrated or that are found to exceed the Manufacturer's specified range or accuracy shall be removed and replaced at no additional cost to the Owner.

3.4 SYSTEM MAINTENANCE

A. The Contractor shall be solely and completely responsible for all maintenance of the system from time of start-up to the date of acceptance, by formal action of the Owner, of all work under the contract. The Contractor shall correct all deficiencies and defects and make any

and all repairs, replacements, modifications, and adjustments as malfunctions or failures occur. The Contractor shall perform all such work required or considered to be required by the Owner to cause and maintain proper operation of the system and to properly maintain the system.

B. The Contractor shall anticipate that the Owner may delay acceptance of all work under the contract if, in the judgment of the Owner, malfunctions or failures in operation of the control system repeatedly occur after start-up. The Contractor shall not be entitled to an extension of time or to any claim for damages because of hindrances, delays or complications caused by or resulting from delay by the Owner in accepting the work because of malfunctions or failures in operation of the control system.

3.5 OPERATION AND MAINTENANCE TRAINING

A. See Section 26 00 00.

END OF SECTION

SECTION 33 32 19
SEPTIC TANK EFFLUENT PUMP SYSTEM

PART 1 GENERAL

1.1 DESCRIPTION OF WORK

The effluent sewer pumping package shall be a complete, factory-built and tested effluent sewer package each consisting of a access riser, pump enclosure sleeve, access lid, pump vault with effluent filter, float switches, pump, discharge assembly, wiring connection system, and control panel. All approved effluent sewer packages must be sourced from a single manufacturer and sold as a complete assembly. In addition, the onsite tank must be deemed by the manufacturer in writing as being compatible with the approved effluent sewer package. All existing septic tanks shall be pumped empty and flushed and cleaned. Tanks shall be filled with clean water for system testing. Prior to testing water shall be tested for chlorine levels and the number and timing of system tests will be coordinated with the Engineer to avoid impacts to the MBR treatment plant.

1.2 RELATED WORK

A. Division 26

1.3 REFERENCE STANDARDS

UL – Underwriters Laboratory
ASTM – American Society for Testing and Materials
AASHTO – American Association of State Highway and Transportation Officials

1.4 SUBMITTALS

Manufacturer shall submit an electronic set of shop drawings and technical data sheets. The submittals shall clearly specify the materials of construction and equipment compatibility, along with drawings for each unique package being supplied.

This system has been designed around an Orenco pumping system. Any manufacture other than Orenco that plans on submitting a bid on this project must provide a submittal to the Engineer of all materials and equipment necessary to evaluate the system as an "Approved Equal" 10 days prior to bid opening for approval. Engineer shall evaluate submitted alternatives and either accept or reject the submittal as an approved equal within 5 working days. Engineer's acceptance does not relieve the Contractor of the responsibility to provide a complete package station that fully complies with these specifications. Failure to provide the necessary submittal and receiving approval to bid as an approved equal may result in the system being rejected.

"OR APPROVED EQUAL" EVALUATIONS

A. Throughout the equipment specifications, you will find the term "or approved equal." For this project, "or approved equal" shall mean equal in the judgment of Engineer. Should Bidder seek approval of a product other than the brand or brands named in the specifications, Bidder shall furnish written evidence that such product conforms in all respects to the specified requirements, and that it has been used successfully elsewhere

under similar conditions. It will not be the responsibility of Engineer to research, review, or determine equality.

B. Where the specified requirements involve conformance to recognized codes or standards, Contractor shall furnish evidence of such conformance in the form of test or inspection reports, prepared by a recognized agency, and bearing an authorized signature. A manufacturer's standard data and catalog cut sheets will not be considered sufficient in themselves, and Engineer will not be responsible for seeking further data from the manufacturer, or for otherwise researching the product. Failure to provide complete data will be cause for rejection of the product. Bidder seeking approval of "or approved equal" products or systems shall provide, at minimum, the following information:

1. Product submittals and system submittals, including, but not limited to, the number of years
   Manufacturer has been in business of manufacturing relevant products/systems.
2. Product specifications and a detailed description of how each product, system, and component is "equal" to the specified access riser, access lid, pump enclosure sleeve with effluent filter (including flow and surface area), float switches, pump motor, pump liquid end, discharge assembly, wiring connection system, or control panel.
3. Warranties for each product, system, and component, along with any and all limitations and exclusions.
4. Evidence of successfully obtaining approval for a system with similar permit requirements with the regulating authority.
5. Summary of product/system track record and history, including, but not limited to:
   a. Number of similarly sized systems
   b. Detailed summary of, at minimum, ten (10) similarly sized systems, at least five (5) years old, including, but not limited to:
      - Project name, location, and application
      - Years in operation
      - Current average daily flows and design flows
      - Operator name and contact information

1.5 WARRANTY

Manufacturer of the effluent sewer package shall provide a warranty of five (5) years to include, without being limited to, effluent filter, float switches, discharge assembly, wiring connection system, and control panel, with a separate warranty of ten (10) years from the date of manufacture for the liquid end of the effluent pump. Warranty term shall ensue after Owner's acceptance and system start-up procedures are complete. Manufacturer shall submit detailed limitations and exclusions from the warranty. The warranty shall be documented in product literature.

1.6 OPERATION AND MAINTENANCE DATA

OPERATION AND MAINTENANCE MANUAL
Manufacturer shall provide five (5) operation and maintenance manuals, four (4) to be sent to Owner, and one to be sent to Engineer.

1.7 QUALIFICATION

The equipment furnished shall be manufactured and supplied by a company experienced in the design and manufacture of effluent sewer systems. Manufacturer shall have a minimum ten (10) years' experience in the design and manufacture of effluent sewer systems of similar size and equipment specified. Manufacturer shall have a minimum of twenty-five (25) successful installations of effluent sewer systems, five of which shall have more than 100 connections or at least the size of the system being bid, whichever is smaller.

1.8 MAINTENANCE MATERIAL

A. SPARE PARTS

Manufacturer shall provide one (1) spare simplex pump of same model supplied, six (6) spare floats, anti-siphon valve, circuit breakers and motor contactors sufficient to repair one station.

B. OPERATION AND MAINTENANCE TOOLS

A. Scum Measuring Device: Manufacturer shall provide a minimum of one (1) scum measuring utility gauge. The gauge shall consist of a minimum 3/8-inch diameter stainless steel rod with an incremental scale for measuring scum levels. The rod shall be bent at a 90-degree angle at the base to aid in identifying the scum "by feeling."

Sludge Measuring Device: Manufacturer shall provide a minimum of one (1) Sludge Judge Ultra or approved equal. Unit shall be constructed of polycarbonate treated with an ultraviolet stabilizer, durable in cold temperatures, and able to withstand heat up to 280° F. The measuring device shall be ¾-inch diameter and marked with tape to designate 1-foot increments.

Cartridge Cleaning Cradle: Manufacturer shall include a minimum of one (1) cartridge cleaning cradle. Cradle shall be for housing the pump enclosure sleeve filter cartridges for cleaning and maintenance.

Cartridge Cleaning Brush: Manufacturer shall include a minimum of one (1) cartridge cleaning brush. Brush shall be for cleaning pump enclosure sleeve filter cartridges.

PART 2 PRODUCTS

Manufacturer shall furnish a complete, factory- built effluent sewer package(s), consisting of a access riser, access lid, pump enclosure sleeve with effluent filter, float switches, pump, discharge assembly, wiring connection system, and control panel. Manufacturer shall supply detailed installation and O&M (operation and maintenance) instructions. Manufacturer shall be Orenco Systems®, Inc., or approved equal.

Individual residents or other type of facility with existing septic tanks (i.e. material and location to be confirmed) to be retrofitted with new effluent pumping systems are shown on the plans and include the following addresses: Youth Center, Smoke House, Natural Resources, Facilities, Makum Housing (#38, #40, #42 and #43) and Tahown Housing (#1 and #2).

Pumping System shall be an integrated package designed for use and retrofitting existing concrete, fiberglass, or polyethylene tanks. Manufacturer of the complete integrated system

shall provide the following integrated components as part of the system.

A. A universal pump enclosure sleeve, installed in conformance with the plans. The filter shall have a minimum effective screen area of no less than 14.5 square feet. The pump enclosure sleeve shall consist of a 12-inch diameter polyethylene sleeve with eight (8) 2-inch diameter holes evenly spaced around the perimeter, located appropriately to allow for maximum sludge and scum accumulation before requiring pumping (approximately 70% of minimum liquid level). The assembly, consisting of 1/8- inch mesh polypropylene tubes, shall be housed inside the polyethylene vault. Attached to the vault is a flow inducer to accept one or two high-head effluent pumps. Pump enclosure sleeve shall be an Orenco Model PVU series or approved equal.

B. The effluent pump shall be a submersible, high-head effluent pump. Pump motor shall be a 1/2 hp, 115 VAC, single phase, 60 Hz, two-wire motor, with 10-foot-long, extra-heavy-duty (SOOW) electrical cord with ground. The pump lead quick-connector shall be a glass-filled thermoplastic with a silicone gasket, 3-pole, and a max load of 13 amps at 240 volts. Pump shall include an internal check valve and shall be capable of delivering 18 gpm at a pressure of 14 feet of total dynamic head, 10 gpm at 171 ft of total dynamic head, and have a shut off head of 250 feet of total dynamic head. When used in conjunction with a flow controller, the pump shall be capable of providing 5 gpm against a total dynamic head of 190 feet. The pump shall be UL- and CSA-listed for use with effluent. The pump must have a minimum 24-hour run-dry capability without water lubrication while submerged in water. The pump shall have a 1/8-inch bypass orifice to ensure flow circulation for motor cooling and to prevent air bind. The pump shall have a floating impeller design to protect against up thrust and to increase pump life. The pump's liquid ends must be repairable (by replacing impellers and/or diffusers) for better long-term cost of ownership. The motor must be rated for continuous use and frequent cycling, at least 100 cycles per day. The motor cable must be suitable for Class 1 and Division 1 and 2 applications. The pump shall be lightweight for easy removal and maintenance. The pump intake screen must be 1/8-inch mesh polypropylene. The pump shall have internal thermal overload protection and internal lightning protection. All pumps shall undergo 3-point (Dead Head, Design Flow, and Design Flow + 30%) wet testing at the factory to confirm performance. Pumps shall be an Orenco Model PF100511CV or approved equal.

C. The discharge piping system shall be a hanging style allowing for quick removal without unions. The discharge assembly shall be 1¼ inch diameter and include an anti-siphon mechanism, flow control disk, and high-pressure reinforced EPDM flex hose with working pressure rating of 250 psi, 1¼ inch EZ pull quick-disconnect, line check valve, and Schedule 80 PVC pipe. The high-pressure external flex hose. Hose shall be reinforced EPDM and constructed of a special elastomer compound with a working pressure of 250 psi. Discharge assembly shall be an Orenco Model HDAS24125FCASLC or approved equal. Flex hose shall be an Orenco Model HVX125PR series or approved equal.

D. Float switch shall be mercury-free, with two mechanical float switches mounted on a PVC stem and attached to the filter cartridge. The floats must be adjustable and must be removable without removing the pump vault. The float lead quick-connector shall be a glass-filled thermoplastic with a silicone gasket, 2-pole, and a max load of 1 amp at 120 volts. The high-level alarms and on/off function shall be preset as shown on the plans. Each float lead shall be secured with a nylon strain relief bushing at the splice box. The on/off float shall be rated for a minimum of 5.0A @ 120 VAC. Float switches shall be Orenco Model MF2P or approved equal.

E. The wiring connection system shall pre-wired with 62 feet of direct-burial PVC/nylon cable with 14 AWG wire for the pump and 18 AWG wire for the floats. The housing shall be ABS,

UL-listed for wet locations, and have four female connectors capable of accepting active connections to three (3) float switches and one (1) pump. The wiring connection system shall be an Orenco Model CLK3-60-NA or approved equal.

F. Controls and alarms shall be listed per UL 508. Panels shall be repairable in the field without the use of soldering irons or substantial disassembly. For single-family home applications, control panel shall be an Orenco Model S1 series or approved equal control panel that includes the following.

1. Motor-Start Contactor: 120 VAC, 1hp, 17 FLA, 60 Hz, 2.5 million cycles at FLA (10 million at 50% of FLA)
2. Toggle Switch: Single-pole, double-throw HOA switch, 20 amps, 1 hp
3. Controls Circuit Breaker: 10 amps, OFF/ON switch, single-pole 120 VAC, DIN rail mounting with thermal magnetic tripping characteristics
4. Pump Circuit Breaker: 20 amps, OFF/ON switch, single-pole 120 VAC, DIN rail mounting with thermal magnetic tripping characteristics
5. Audio Alarm: 95 dB at 24 inches, warble-tone sound
6. Visual Alarm: 7/8-inch diameter red lens, “push-to-silence,” UL Type 4X, 1-watt LED bulb, 120 VAC
7. Panel Enclosure: Measures 11.5 inches high x 9.3 inches wide x 5.4 inches deep, UL Type 4X rated or Type 3R when using a generator receptacle, constructed of UV-resistant fiberglass, stainless steel hinges and latch
8. S1 Panel Ratings: 120 VAC, 1 hp, 14 amps, single phase, 60 Hz

The effluent sewer package(s) shall be completely serviceable, with easy access to the pump(s), filter, and float switches. The pump(s) shall be designed for removal without removing the filter and float switches. The pumps must consist of a motor, a liquid end, and an electrical cable and must be repairable (by replacing impellers and/or diffusers), serviceable, and cleanable. The pump shall be lightweight for easy removal and maintenance without removing the filter or float switches.

G. Access Risers:

The riser material shall be PVC as per ASTM D1784 and tested in accordance with AASHTO M304M-89. The risers shall be constructed of non-corrosive material and designed to be buried in soil. Risers shall have a minimum stiffness of 10 psi when tested according to ASTM D2412. Risers shall be capable of withstanding a truck wheel load (54 square inches) of 2,500 pounds for 60 minutes with a maximum vertical deflection of ½-inch. (Note: This does not imply that PVC risers are intended for traffic areas.) Risers shall extend 3 inches above the ground surface to allow for settlement. Risers shall be Orenco Systems, Inc., Model Ultra-Rib, KOR FLO or approved equal.

All attachment components shall be constructed of waterproof, non-corrosive materials, such as PVC, ABS, fiberglass, or stainless steel. Adhesives and sealants shall be waterproof, corrosion resistant, and approved for the intended application. The riser-to-tank connection shall be watertight and structurally sound. Contractor shall verify material of existing septic tank and confirm appropriate attachment system is provided. The riser-to-tank connection shall be capable of withstanding a vertical uplift of 5,000 lbs to prevent riser separation due to tank settlement, frost heave, or accidental vehicle traffic over the

tank. Risers attached to concrete tanks shall use the following attachment system, or approved equal:

1. Model PRTA24 tank adapter bolted to lid using Model PRTA24BDKIT bolt-down kit and a two-component methacrylate structural adhesive by Orenco Systems or approved equal
2. One lid shall be furnished with each access riser. Lids shall be fiberglass with green non-skid finish, and provided with stainless steel bolts, and wrench. Lids shall be waterproof, corrosion resistant, and UV resistant. Lids shall be flat, with no noticeable upward dome; a crown or dome of no more than 1/8-inch is allowable. Lids shall not allow water to pond on them. Lids shall have a green non-skid finish. Self-lubricating plastics, such as polyethylene, shall not be considered non-skid without addition of a non-skid coating. Lids shall be designed to form a watertight seal with the top of riser. Lids shall be capable of withstanding a truck wheel load (81 square inches) of 2,500 pounds for 60 minutes with a maximum vertical deflection of ¾-inch. Lids shall be provided with tamper-resistant stainless-steel fasteners and a tool for fastener removal. Tamper-resistant fasteners include recessed drives, such as hex, Torx, and square. Fasteners that can be removed with common screwdrivers, such as slotted and Phillips, or fasteners that can be removed with standard tools, such as pliers or crescent wrenches, are not considered tamper-resistant. To prevent a tripping hazard, fasteners shall not extend above the surface of the lid. Lids shall be Orenco Systems, Inc., DuraFiber Model FLD30G, FLD24G, as appropriate for the riser or approved equal

PART 3 EXECUTION

3.1 INSTALLATION

Existing Tank Preparation

Prior to installation of pumping system the Contractor shall have the existing septic tank pumped and cleaned of all solids and debris.

Risers

Riser installation shall be accomplished according to Manufacturer's instructions. All risers shall be constructed to be watertight. The risers shall be attached to the tanks such that a watertight seal is provided. Risers shall extend 2 inches above original grade to allow for settlement and to ensure positive drainage away from the access. Contractor should assume new risers will be necessary for these septic tanks.

Pumping System Components

Following installation of new riser component on each existing septic tank identified in the plans install the new pumping system components in accordance with Manufacturer's recommendations, Engineer's plans and all state and local regulations.

Pump Control Panel

The pump control panel shall be mounted on a post and not on the existing building wall. The control panel shall be located within 50 feet of, and in sight of, the pump motor or shall be

provided with a lockable disconnect switch. When possible, the panel should be mounted in the shade and protected from the weather. The panel should be located at a convenient height (usually about five feet above the ground) and where it will be accessible for maintenance. Contractor shall be responsible for bringing power from the existing electrical meter that is shown in its approximate location on the drawings. This will require working inside each residential or non-residential system. Repair any damage caused by this effort to the satisfaction of the Owner. Refer to Division 26 for further electrical information.

Service Connections

Service connection will include a swing-check valve, factory-connected to a ball valve. All components will be PVC Schedule 40 and rated for 150 psi.

A. Service connection shall be enclosed in PVC access riser Risers shall extend to 2 inches above the ground surface to allow for settlement and shall have a minimum nominal diameter of 8 inches.

B. One lid shall be furnished with each access riser. Lids shall be fiberglass with green non-skid finish.

3.2 FIELD TESTING

A. Manufacturer shall provide the services of a trained representative to instruct the installing Contractor's crew regarding the proper installation and field testing of each effluent sewer unit per Manufacturer's recommendations and requirements. Manufacturer shall have a trained representative provide installation and training services for a minimum of one (1) visit of a minimum of one (1) eight-hour day at the beginning of construction. Engineer shall be present during this training session.

B. As part of Manufacturer's installation training and to help ensure that subsequent installations are installed in accordance with Manufacturer's installation and field testing instructions, Manufacturer, or an approved representative, shall inspect and submit an inspection checklist report for the first (complete) installation.

C. Each pumping system shall be field tested per the Manufactures written recommendation.

PART 4 MEASUREMENT AND PAYMENT

4.1 METHODS OF MEASUREMENT

Each Septic Tank Effluent Pump System installed as a complete and operation system shall be measured per each.

4.2 PAYMENT

Payment for all work, materials, labor, equipment, tools, and incidentals including all electrical work, pumping and cleaning the existing septic tanks, and system testing necessary to provide a complete and operational septic tank effluent pumping system shall be included in the Bid Item; "Simplex Pump Station".

SECTION 33 32 20
DUPLEX SEPTIC TANK EFFLUENT PUMP SYSTEM

PART 1 GENERAL

DESCRIPTION OF WORK

The Tahown duplex package pump station shall be an integrated package designed for use in Concrete, Fiberglass, or Polyethylene tanks. Manufacturer of the complete, integrated system shall provide all system components to provide a complete operational system. All applicable requirements of Section 33 32 19 apply.

The existing concrete vault housing the current pumps shall be pumped empty, flushed and cleaned. Tank shall be filled with clean water for system testing. Prior to testing, water shall be tested for chlorine levels and the timing of the system test will be coordinated with the Engineer to avoid impacts to the MBR treatment plant.

1.1 RELATED WORK

A. Division 26
B. Section 33 32 19

1.2 REFERENCE STANDARDS

UL – Underwriters Laboratory
ASTM – American Society for Testing and Materials
AASHTO – American Association of State Highway and Transportation Officials

1.4 SUBMITTALS

Manufacturer shall submit an electronic set of shop drawings and technical data sheets. The submittals shall clearly specify the materials of construction and equipment compatibility, along with drawings for each unique package being supplied.

This system has been designed around an Orenco pumping system. Any manufacture other than Orenco that plans on submitting a bid on this project must provide a submittal to the Engineer of all materials and equipment necessary to evaluate the system as an "Approved Equal" 10 days prior to bid opening for approval. Engineer shall evaluate submitted alternatives and either accept or reject the submittal as an approved equal within 5 working days. Engineer's acceptance does not relieve the Contractor of the responsibility to provide a complete package station that fully complies with these specifications. Failure to provide the necessary submittal and receiving approval to bid as an approved equal may result in the system being rejected.

"OR APPROVED EQUAL" EVALUATIONS

A. Throughout the equipment specifications, you will find the term "or approved equal." For this project, "or approved equal" shall mean equal in the judgment of Engineer. Should Bidder seek approval of a product other than the brand or brands named in the specifications, Bidder shall furnish written evidence that such product conforms

in all respects to the specified requirements, and that it has been used successfully elsewhere under similar conditions. It will not be the responsibility of Engineer to research, review, or determine equality.

B. Where the specified requirements involve conformance to recognized codes or standards, Contractor shall furnish evidence of such conformance in the form of test or inspection reports, prepared by a recognized agency, and bearing an authorized signature. A manufacturer's standard data and catalog cut sheets will not be considered sufficient in themselves, and Engineer will not be responsible for seeking further data from the manufacturer, or for otherwise researching the product. Failure to provide complete data will be cause for rejection of the product. Bidder seeking approval of "or approved equal" products or systems shall provide, at minimum, the following information:

1. Product submittals and system submittals, including, but not limited to, the number of years
   Manufacturer has been in business of manufacturing relevant products/systems.
2. Product specifications and a detailed description of how each product, system, and component is "equal" to the specified access riser, access lid, pump enclosure sleeve with effluent filter (including flow and surface area), float switches, pump motor, pump liquid end, discharge assembly, wiring connection system, or control panel.
3. Warranties for each product, system, and component, along with any and all limitations and exclusions.
4. Evidence of successfully obtaining approval for a system with similar permit requirements with the regulating authority.
5. Summary of product/system track record and history, including, but not limited to:
   a. Number of similarly sized systems
   b. Detailed summary of, at minimum, ten (10) similarly sized systems, at least five (5) years old, including, but not limited to:
      - Project name, location, and application
      - Years in operation
      - Current average daily flows and design flows
      - Operator name and contact information

1.5 WARRANTY

Manufacturer of the effluent sewer package shall provide a warranty of five (5) years to include, without being limited to, effluent filter, float switches, discharge assembly, wiring connection system, and control panel, with a separate warranty of ten (10) years from the date of manufacture for the liquid end of the effluent pump. Warranty term shall ensue after Owner's acceptance and system start-up procedures are complete. Manufacturer shall submit detailed limitations and exclusions from the warranty. The warranty shall be documented in product literature.

1.6 OPERATION AND MAINTENANCE DATA

OPERATION AND MAINTENANCE MANUAL
Manufacturer shall provide five (5) operation and maintenance manuals, four (4) to be sent to Owner, and one to be sent to Engineer.

PART 2 PRODUCTS

The Pumping System shall be installed in conformance with the plans. The pump filter shall have a minimum effective screen area of no less than 14.5 square feet. The pump enclosure sleeve shall consist of a 12-inch diameter polyethylene vault with eight (8) 2-inch diameter holes evenly spaced around the perimeter, located appropriately to allow for maximum sludge and scum accumulation before requiring pumping (approximately 70% of minimum liquid level). The pump enclosure sleeve assembly, consisting of 1/8-inch mesh polypropylene tubes, shall be housed inside the polyethylene vault. Attached to the vault is a flow inducer to accept one or two high-head effluent pumps. The pump enclosure sleeve shall be a Universal Biotube Pump Vault, Model PVU series by Orenco or approved equal.

A. This system shall use a duplex (2-pump) pumping system for redundancy. Pump shall be high-head pump, 0.5 Hp, 120 VAC, single phase, 60 Hz, two-wire motor, with 10-foot- long, extra-heavy-duty (SOOW) electrical cord with ground. Pump shall be capable of delivering 0 gpm at a total dynamic head of 112 ft, 30 gpm at a total dynamic head of 56 ft, and 40 gpm at a total dynamic head of 16 ft. Pump shall be UL- and CSA-listed for use with effluent. Pump must have a minimum 24-hour run-dry capability without water lubrication while submerged in water. Pump shall have a 1/8-inch bypass orifice to ensure flow circulation for motor cooling and to prevent air bind. Pump shall have a floating impeller design to protect against upthrust and to increase pump life. Pump's liquid ends must be repairable (by replacing impellers and/or diffusers) for better long-term cost of ownership. Pump motor must be rated for continuous use and frequent cycling, at least 100 cycles per day. Pump motor cable must be suitable for Class 1 and Division 1 and 2 applications. Pump shall be lightweight for easy removal and maintenance. Pump intake screen must be 1/8-inch mesh polypropylene. Pump shall have internal thermal overload protection and internal lightning protection. All pumps shall undergo 3-point (Dead Head, Design Flow, and Design Flow + 30%) wet testing at the factory to confirm performance. Pumps shall be Orenco Systems, Inc., Model PF300511 or approved equal.

B. Discharge assembly shall be hanging-style discharge assembly or Engineer-approved equal. Discharge assembly shall be 1¼ inch diameter and include a bronze check valve, anti-siphon mechanism, and high-pressure reinforced EPDM flex hose with working pressure rating of 250 psi, 1¼ inch EZ pull quick disconnect, line check valve, and Schedule 80 PVC pipe. Hose shall be reinforced EPDM and constructed of a special elastomer compound with a working pressure of 250 psi. Discharge assembly shall be Orenco Systems, Inc., Model HDAD30125CASLC or approved equal. External flex hose shall be Orenco Systems, Inc., Model HVX125PR series or approved equal.

C. Float switches shall be mercury-free with four float switches mounted on a PVC stem, and attached to the filter cartridge. The float switches must be adjustable and must be removable without removing the pump vault. The high/lag, pump on, pump off, and low-level alarms shall be preset as shown on the plans. Each float lead shall be secured with a nylon strain relief bushing at the splice box. The floats shall be UL- or CSA-listed. Floats shall be Orenco Systems, Inc., Model MF4P or approved equal.

D. CONTROLS AND ALARMS

Control panel shall be a duplex control panel. Controls and alarms shall be listed per UL 508. Panels shall be repairable in the field without the use of soldering irons or substantial disassembly. Panel shall include the following:

1. Programmable Logic Unit: 120/240 VAC programmable logic unit with built-in LCD screen and programming keys, providing control functions and timing for panel operation
2. Motor-Start Contactor: 120 VAC 17 FLA, 1 hp, 60 Hz, 2.5 million cycles at FLA (10 million at 50% FLA). 240 VAC 17 FLA, 3 hp, 60 Hz, 2.5 million cycles at FLA (10 million at 50% FLA)
3. Toggle Switch: Single-pole, double-throw HOA switch, 20 amps, 1 hp
4. Controls Circuit Breaker: 10 amps, OFF/ON switch, single-pole 120 VAC, DIN rail mounting with thermal magnetic tripping characteristics
5. Pump Circuit Breaker: 20 amps, OFF/ON switch, single-pole 120 VAC, double-pole 240 VAC, DIN rail mounting with thermal magnetic tripping characteristics; power supplied by a 30-amp breaker
6. Audio Alarm: 95 dB at 24 inches, warble-tone sound
7. Visual Alarm: 7/8-inch diameter red lens, “push-to-silence,” UL Type 4X, 1-watt LED bulb, 120 VAC
8. Panel Enclosure: UL Type 4X rated or Type 3R when using generator receptacles with stainless steel hinges, latch, and conduit couplings provided.
9. MVP Panel: Ratings of 120 VAC, 1 hp, 16 amps, single phase, 60 Hz and 240 VAC, 3 hp, 16 amps, single phase, 60 Hz
10. Pump Run Light: 7/8-inch green lens, UL Type 4X, 1-watt LED bulb, 120 VAC
11. 3-Way (main, auto, off) Manual Power Transfer/Disconnect Switch
12. Current Sensor: 120 VAC, go/no-go operation, pump fail indicator light on panel, manual reset switch

Control Panel shall be Orenco Systems, Inc., MVP DAX series or approved equal.

PART 3 EXECUTION

3.1 INSTALLATION

Remove all existing pumps and equipment from the concrete tank shown on the plans and install the new pumping system components in accordance with Manufacturer’s recommendations, Engineer’s plans and all state and local regulations.

Protect the existing upstream effluent pumping system while all work is being completed until the existing effluent can transfer to this downstream vault. Temporarily plug inlet pipe connecting both tanks in order to install the new system.

Contractor shall locate the pump control panel on the nearby pump station building wall. The control panel shall be located within 50 feet and in sight of the pump motor or shall be provided with a lockable disconnect switch.

PART 4 MEASUREMENT AND PAYMENT

4.1 METHODS OF MEASUREMENT

No separate measurement will be made for the Duplex Septic Tank Effluent Pump System.

4.2 PAYMENT

Payment for all work, materials, labor, equipment, tools, and incidentals including all electrical work, pumping and cleaning the existing concrete vault, and system testing necessary to provide a complete and operational duplex septic tank effluent pumping system shall be included in the lump sum Bid Item; “Tahown Pump Station”.

SECTION 40 05 50
PROCESS VALVES AND ACTUATORS

PART 1 GENERAL

1.1 DESCRIPTION OF WORK

A. The work included in this section consists of furnishing and installing a plug valve and motorized actuator as indicated on the Drawings.

1.2 RELATED WORK

A. Division 26

1.3 SUBMITTALS

A. Product data sheets for valves and actuators.

B. Assembly drawings showing dimensions.

C. Power and control wiring and plumbing diagrams.

D. Design calculations for the valve actuator demonstrating the required valve operator output torque and motor sizing.

E. Operation and maintenance manuals.

F. Warranty.

1.4 PAYMENT

A. The cost for the work and materials specified herein shall be included in the lump sum cost of the wastewater treatment plant.

1.5 WARRANTY

A. Valve manufacturer shall warrant the equipment specified herein to be free of defects in materials and workmanship for a period of two (2) years from commissioning.

PART 2 PRODUCTS

2.1 PLUG VALVES

A. Manufacturer

1. DeZurik, Sartell, MN
2. Henry Pratt Company, Aurora IL
3. Milliken Millcentric, Aurora, IL
4. Engineer-approved equal.

B. Description

1. American Water Works Association (AWWA) Standard C517 Resilient-Seated Cast-Iron Eccentric Plug Valves
2. Non-lubricated, eccentric-type
3. 100% Port
4. Joints: Flanged
5. Size: 6”

C. Construction

1. Body and bonnet: Ductile or cast iron with raised seats
2. Seats: Welded-in overlay of high nickel content surfaces contacting the plug
3. Bearings: Permanently lubricated, Type 316 stainless steel
4. Design: Bolted bonnet
5. Packing: 4" and larger valves can be repacked without removing the bonnet, packing is adjustable.
6. Flanges: ANSI/ASME B16.1 125-pound
7. Plug: Resilient faced plug, neoprene or Buna-N

8. Gearing shall be enclosed in a semi-steel housing and be suitable for running in a lubricant with seals provided on all shafts to prevent entry of dirt and water into the actuator.
9. Actuator shaft and the quadrant shall be supported on permanently lubricated bronze bearings.
10. Interior and Exterior Coatings: Fusion-bonded epoxy coating minimum 8 mils DFT per AWWA C550 Protective Interior Coatings for Valves and Hydrants
11. Hardware and fasteners: 304 stainless steel
12. Indicators: Valves shall be furnished with a position indicator and a direction of flow indicator.

2.2 MOTORIZED ACTUATORS

A. Manufacturer
1. Auma SA07.2, Canonsburg, PA
2. Limitorque QX, Lynchburg, VA
3. Rotork IQT, Rochester, NY

B. Description
1. Plug valve shall be furnished with a motorized actuator furnished by the valve manufacturer.
2. Actuator sizing and operation shall be the responsibility of the valve manufacturer, who shall select the rating of the actuator, the rate of operation, and the sizing of the motor and output torque.
3. Motorized actuators and controls shall comply with all requirements for area classification per the National Electric Code.
4. Actuators shall comply with latest version of AWWA C542 Electric Motor Actuators for Valves and Slide Gates.
5. Actuators shall be sized to 1-1/2 times the required operating torque and 1-1/2 times the maximum operating pressure of the piping system.
6. Actuators shall incorporate electric motor, reduction gearing, reversing starter with local controls, mechanical overload torque switches, automatic declutchable chainwheel, position switches, terminals for remote control and indication connections, and water-tight enclosure.
7. Actuators shall be suitable for full 90-degree rotation of quarter-turn valves or for use on multiturn valves, as applicable, and for modulating service.
8. Actuators shall be provided with manual override handwheel which allows manual operation during electrical power interruption.

C. Actuator Power Supply: 120 VAC, 1 phase, 60 Hz

D. Enclosure: NEMA 4/6/7 IP68, NEC Class I, Group D, Division 1 located in a below grade vault with closed piping system

E. Operating Temperature: -30 to 70 deg C

F. Motor
1. Integral reversing motor starter with built-in overload protection
2. Suitable for 60 starts per hour
3. Class F insulation

G. Controls:
1. Local-Stop-Remote selector switch, pad-lockable
2. Open-Close selector switch to control valve in Local position
3. Open and Close indicating lights and digital position indication on local display

4. Remote control dry contact inputs:
   a. Open-Stop-Close inputs. Valve travel stops when remote Stop contact opens.
   b. Emergency shut down
   c. Open interlock and closed interlock.
5. Remote dry contact outputs:
   a. Valve selector switch in Remote
   b. Valve open limit
   c. Valve close limit
   d. Common valve motor fault (over temperature, phase lost, etc.)
   e. Common actuator fault
6. Modulating controller to control valve position in proportion to a 4-20 mA analog input signal.
7. Position transmitter to provide a 4-20 mA analog signal output in proportion to valve position.
8. Valve shall remain in last position on loss of operator power.

H. Limit Switches:
1. Single-pole, double-throw (SPDT) type, field adjustable, with contacts rated for 5 amps at 120 VAC.
2. Each valve actuator to have a minimum of two auxiliary transfer contacts at end position, one for valve Open Limit and one for valve Close Limit.
3. Housed in actuator control enclosure.

PART 3 EXECUTION

3.1 INSTALLATION

A. Contractor shall install the valves specified herein in accordance with the Manufacturer's installation instructions and drawings, and in accordance with AWWA M44 Distribution Valves: Selection, Installation, Field Testing, and Maintenance.

B. Valves shall be installed with the seat on the upstream side.

C. Valves and actuators shall be adequately supported to prevent their load from being imposed on adjacent piping.

3.2 TESTING

A. Valves shall be hydrostatically pressure tested to 1-1/2 times the maximum operating pressure of the piping system.

B. Valves and actuators shall be tested under all required operating modes. All inputs and output signals between valve controller and plant control system shall be tested.

*** END OF SECTION ***

THIS PAGE WAS INTENTIONALLY LEFT BLANK

SECTION 40 70 00
PROCESS INSTRUMENTATION AND FUNCTIONS

PART 1 GENERAL

1.0 DESCRIPTION OF WORK

A. The work included in this section consists of furnishing, installing, calibrating, and on-site functional testing of process instrumentation, and the programming of the plant control system.

B. Contractor shall provide the instrumentation and control system through a single subcontractor, referred to as a Control System Integrator (CSI).

C. CSI subcontractor shall be responsible for the functional operation of the entire instrumentation and control system specified herein and in Division 26.

1.1 RELATED WORK

A. Division 26 - Electrical

1.2 SUBMITTALS

A. Submittals shall include:

1. CSI Company experience resume demonstrating that it complies with the qualification criteria specified herein, and its contact information.

2. Wiring diagrams: Comprehensive set of point-to-point wiring diagrams showing all interconnections between equipment, field instruments, and control panels.

3. Instrument List: A detailed instrument list for all field instruments that includes tag number, service, manufacturer, type, range, NEMA classification, connection type, factory calibration requirement, and UL approval.

4. Refer to Division 26 for submittal requirements for control panels, programmable logic controllers (PLCs), Human Machine Interface (HMI) operator interface terminals, and panel-mounted hardware.

5. Control System Programming Documentation:

a. Narrative description for all control systems, list of control and monitoring functions, list of alarms, control and alarm set-points, graphic interface screen layouts.

b. Program documentation printout with tag numbers, ladder logic, program and function listing, descriptive comments, list of tags available to plant supervisory system.

6. Product Data: Field-instrument catalog cut sheets. Product data shall be marked with tag numbers on all sheets to relate them to the instrument list. Product Data shall be marked with arrows to show exact features to be provided.

7. Manufacturer's warranties.

8. Process connected instruments:

a. Installation instructions and details including: tube material and size, connection size, fitting size, material, and rating, isolation or other valve type and material as applicable, pipe stand size and material, required elevations and dimensions.

b. List of spare parts and calibration standards as applicable.

B. Operation and Maintenance Manuals shall include the following:

1. All approved submittals
2. As-built wiring diagrams of overall system
3. Start-up procedures
4. Operating procedures including manual and automatic mode operation
5. Calibration procedures
6. Testing procedures
7. Troubleshooting procedures
8. Preventative maintenance procedures
9. Procedures for replacement of components
10. List of recommended spare parts
11. Listing of recommended maintenance tools and equipment
12. Program documentation printout with tag numbers and descriptive comments
13. Electronic backup of all programs.

1.3 QUALIFICATIONS

A. Experience:

1. The CSI company must have specialized in the design, assembly, programming, testing, installation, and service of water and wastewater treatment plant control systems for at least ten (10) years and located within 120 miles of the project site.
2. The CSI company must employ a minimum of two (2) full-time field service engineers capable of programming and troubleshooting the HMI and PLC Software proposed for the project.

B. Qualified CSIs

1. Systems Interface Inc., 10802 47th Avenue, Mukilteo, WA 98275, Phone: 425-481-1225
2. Advanced Industrial Automation, 617 Northwest 44th Street, Seattle, Washington 98107, Phone: 206-789-1373
3. Owner-approved equal.

1.4 PAYMENT

A. The cost for the equipment and labor specified herein shall be included in the lump sum cost of the wastewater treatment plant.

1.5 WARRANTY

A. Contractor and CSI shall warrant the equipment specified herein for a period of two (2) years from commissioning.

B. Contractor shall require the CSI to make all repairs, replacements, modifications, and adjustments required to eliminate any defects in design, materials and workmanship which are disclosed within the warranty period.

PART 2 PRODUCTS

2.0 MAGENTIC FLOW SENSORS

A. Manufacturer:

1. The electromagnetic flow sensors shall be:

a. Siemens Sitrans F M MAG 3100 Series

b. Endress + Hauser Proline Promag 53H or 53P

c. Engineer-approved equal.

2. All electromagnetic flow sensors and transmitters shall be furnished by a single vendor and shall be product of the same manufacturer.

B. Measuring Principle:

1. Electromagnetic induction

C. Process Connection:

1. Mating flanges: ANSI B 16.5 Class 150 (290 psi)

D. Rated operating conditions:

1. Ambient temperature: -40 … +70 °C (-40 … +158 °F)

2. Temperature of medium:

a. PFA Liner: -30 … +130 °C (-22 … +266 °F)

b. Ebonite: -10 ... +70 °C (14 ... 158 °F)

3. Operating pressure range: -0.3 to 290 psi

4. Mechanical load (vibration): 3.17 grms

E. Enclosure Rating:

a. IP67/NEMA 4X

F. Materials:

1. Housing:

a. Stainless steel AISI 316L/1.4404

b. Carbon steel ASTM A 105, with corrosion resistant two-component epoxy coating (min. 150 µm).

2. Electrode

a. Platinum

b. Tantalum

c. Hastelloy C276 or C22

3. Grounding electrodes
    a. Platinum
    b. Tantalum
    c. Hastelloy C22
    d. Stainless Steel AISI 316/1.4436
4. Terminal box: Fiberglass reinforced polyamide
5. Fixing studs: Stainless Steel AISI 304/1.4301
6. Gaskets:
    a. Ethylene Propylene Diene Monomer (EPDM) (max. 150 °C, PN 40 (max. 302 °F, 600 psi))
    b. Polytetrafluoroethylene (PTFE) (max. 130 °C, PN 25 (max. 266 °F, 300 psi))
7. Pipe connection adapters:
    a. Stainless Steel (SS) AISI 316/1.4436
    b. Hastelloy C22/2.4602
    c. Polytetrafluoroethylene (PVDF)
8. Liner:
    a. Perfluoroalkoxy Copolymer Resin (PFA)
    b. Ebonite

G. Cable Entries:
1. Remote installation 2 x M20 or 2 x ½" NPT

H. Certificates and Approvals:
1. Standard production calibration, calibration report shipped with sensor: Zero-point, 2 x 25 %, 2 x 90 %

I. Flow Meter Schedule

Tag No.	**Specified Flow Range (GPD)**	**Nominal Pipe Diameter**	**Transmitter Mounting**
FE/FIT-012	0 – 300,000	6”	Local
FE/FIT-021	0 – 150,000	2”	Local
FE/FIT-022	0 – 150,000	2”	Local

2.1 MAGNETIC FLOW TRANSMITTERS

A. Manufacturer:
1. The transmitters shall be:
    a. Siemens Sitrans F M MAG 6000 Series, or

b. Engineer-approved equal.

2. Transmitters shall be compatible with the sensors furnished. Each flow meter shall be furnished with a transmitter.

3. All electromagnetic flow sensors and transmitters shall be furnished by a single vendor and shall be products of the same manufacturer.

B. Mode of operation and design:

1. Measuring principle: Electromagnetic with pulsed constant field

2. Detection of empty pipe feature with cable for remote mounted installations

C. Current output signal range: 4 to 20 mA

D. Features and Performance:

1. Low flow cut off: 0 ... 9.9 % of maximum flow

2. Galvanic isolation: All inputs and outputs are galvanically isolated.

3. Max. measuring error (incl. sensor and zero point): 0.2 % ±1 mm/s.

E. Rated operation conditions:

1. Ambient temperature for Operation: -20 ... +60 °C (-4 ... +140 °F)

2. Mechanical load (vibration): 3.17 grms

F. Enclosure Rating:

1. IP67/NEMA 4X

2. NEC Class 1, Div 2 Rating

G. Display and keypad:

1. Totalizer: Two eight-digit counters for forward, net or reverse flow

2. Display: Background illumination with alphanumeric text, 3 x 20 characters to indicate flow rate, totalized values, settings and faults; Reverse flow indicated by negative sign.

3. Time constant: Time constant as current output time constant.

H. Transmitter Enclosure material: Fiber glass reinforced polyamide.

I. Power Supply: 115 ... 230 V AC +10 % -15 %, 60 Hz.

J. Certificates and approvals: UL general purpose, FM Class I, Div 2

K. Special Tools and Spare Parts

1. Coil cable, length as required for installation.

2. Electrode cable, length as required for installation.

2.2 TURBIDITY ANALYZER

A. Manufacturer:

1. Hach TU5300sc Low Range Laser Turbidimeter, or

2. Engineer-approved equal.

B. Performance Requirements

1. Measuring Range: 0 to 700 NTU/FNU/TE/F/ FTU USEPA with Hach Method 10258 Sensor
2. Detection Limit: 0.002 NTU/NTU/FNU/TE/F/FTU
3. Accuracy:
    a. ±2% of reading ±0.01 NTU from 0 to 40 NTU based on formazin primary standard at 25°C
    b. ±10% of reading from 40 to 1000 NTU based on formazin primary standard at 25°C
4. Repeatability: ±1% of reading or 0.002 NTU, whichever is greater based on formazin primary standard at 25°C
5. Resolution: 0.0001 NTU/FNU/TE/F/ FTU/EBC
6. Response Time: T90 <45s at 100 mL/min
7. Sample Flow: 100 to 1000 mL/min; optimal flow rate 200 to 500mL/min
8. Sample Pressure:
    a. Max. 6 bar (87 psi) compared to air at sample temperature range of 0 to 40 °C (32 to 104 °F)
    b. Max. 3 bar (43 psi) compared to air at temperature range of 40 °C to 60°C (104 °F to 140 °F)
9. Sample Temperature
    a. 2 to 60 °C (36 to 140 °F)

C. Certifications
1. CE Compliant
2. US FDA accession number: 1420493-001 EPA version, 1420492-001 ISO version.

D. Environmental Requirements
1. Operational Criteria
2. Storage Temperature: -40 to 60 °C (-40 to 140 °F)
3. Operating Temperature: 0 to 50 °C (32 to 122 °F)

E. Relative Humidity: 5 to 95 %, non-condensing

F. Enclosure Rating: Electronic compartment IP55; all other functional units IP65 with process head/ACM attached.

G. Maintenance Service: Cleaning the measurement vial and replacing desiccant cartridge.

H. Sensor:
1. Class 1 650nm (EPA) or 850 nm (ISO) laser light source
2. 360° x 90° detection system

I. Online turbidimeter:
1. Utilizes a laser-based 360° x 90° optical system that measures turbidity from multiple different angles.

2. Continuous particle removal using a vortex created by the fluid path.

3. Includes capability to actively monitor all internal components and present diagnostics on the overall health of the turbidimeter and time to next required maintenance.

4. Provided with predictive diagnostics controller designed to continuously monitor turbidity in a sample stream and flow measurement and to initiate automatic cleaning.

5. The overall status of instrument performance is displayed as a percentage value via a measurement indicator.

6. The overall time remaining until maintenance tasks are due is displayed in days.

7. Built in-help screens are included.

J. Components:

1. Turbidimeter

2. Mounting bracket

3. Desiccant cartridge

4. User Manual

K. Weight: 5 lbs (2.3 kg)

L. Instrument Options:

1. System Check Module

M. Instrument Accessories:

1. Flow sensor

2. Automatic Cleaning Module

3. Bubble trap

4. Turbidimeter maintenance kit

5. Glass calibration/verification rod

6. StablCal® Sealed Vial Calibration Standards

2.3 TURBIDITY ANALYZER TRANSMITTER

A. Manufacturer

1. Hach Company, Loveland, CO Model sc200 Controller, or

2. Engineer-approved equal.

3. Transmitters shall be compatible with the analyzers furnished. Each analyzer shall be furnished with a transmitter.

B. Measurement Procedures

1. Microprocessor-based sensor controller.

2. Digital sensors connected to the controller can be changed by unplugging and plugging in sensors as necessary.

3. Analog sensor modules connected to the controller can be changed by unplugging and plugging analog sensor modules as necessary.

C. The controller accepts 4 different analog sensors.

D. Operational Criteria

1. Temperature: -4.0 to 140.0 °F (-20.0 to 60.0 °C)

2. Relative humidity: 0 to 95%, non-condensing

E. Features:

1. Menu-driven operation system.

2. Display is graphic dot matrix LCD with LED backlighting.

3. Real-time clock.

4. Two security levels.

5. Data logger with RS-232 capability.

6. Worded operation menus.

7. SD card reader for data download and controller software upload.

8. All user settings of the controller are retained for 10 years in flash memory.

9. The controller is equipped with a system check for:

a. Power up test (monitoring and shutdown)

b. Total power draw

c. Memory devices

d. Temperature mother board

F. Power Supply: 100 to 240 Vac ±10%, 50/60 Hz; 15 W with 7 W sensor/network card load, 37 W with 25 W sensor/network card load.

G. Outputs:

1. Four electromechanical, UL rated, SPDT relays (Form C) are provided for user-configurable contacts rated 100 to 230 Vac, 5 Amp at 30 VDC resistive maximum.

2. Two analog 0/4-20 mA outputs are provided with a maximum impedance of 500 ohms.

3. The controller can be equipped with three additional 4-20 mA outputs with a maximum impedance of 500 ohms.

H. Materials

1. Housing: polycarbonate, aluminum (powder coated), and stainless steel

2. Rating: NEMA 4X enclosure, rated IP66

I. Conduit openings: 0.5 in. NPT

J. Standard equipment

1. Controller

2. Mounting hardware for wall, pipe, and panel mounting, as required for installation.

2.4 AUTOMATIC SAMPLER

A. Manufacturer

1. Hach Model AS950 All Weather Refrigerated
2. Engineer-approved equal.

B. Measurement Procedures

1. The method of sample collection shall be via high-speed peristaltic pump for collection of the sample liquid.
2. The method of sample detection shall be ultrasonic.

C. Performance Requirements

1. Sample cooling: maintains sample liquid at 4°C (39°F) in ambient temperature to 50°C (122°F) maximum; accurate to ±0.8°C (±1.5°F).
2. Sample volume: programmable in 10 mL increments from 10 to 10,000 mL.
3. Sample volume repeatability ±5% of 200 mL sample volume with: 4.6 m (15 ft.) vertical lift, 4.9 m (16 ft.) of 3/8- in vinyl intake tube, single bottle, full bottle shut-off at room temperature and 1524 m (5000 ft.) elevation.
4. Pacing intervals: selectable in single increments from 1 to 9,999 flow pulses or 1 to 999 hours in 1-minute increments. Accepts 4-20mA input from an external device to pace the sampler.
5. Vertical lift: 8.5 m (28 ft.) using 8.8m (29 ft.) maximum of 3/8-in. vinyl intake tube at sea level at 20 to 25°C (68 to 77°F).
6. Sample volume accuracy: ±5% of 200 mL sample volume with: 4.6 m (15 ft.) vertical lift, 4.9 m (16 ft.) of 3/8- in. vinyl intake tube, single bottle, full bottle shut-off at room temperature and 1524 m (5000 ft.) elevation.
7. Sample transport velocity: 0.9 m/s (2.9 ft./s) at 4.6 m (15 ft.) vertical lift (16 ft. of 3/8-in. vinyl intake tubing at 70°F at 5000 ft. elevation).
8. Pump flow rate: 4.8 L/min (1.25 gpm) at 1 m (3 ft.) vertical lift with 3/8-in intake tube typical.

D. Certifications

1. Controller: CE
2. Cabinet: UL/CSA/CE

E. Operating Criteria

1. Operating temperature: 0 to 50°C (32 to 122°F)
2. Operating temperature with controller compartment heater: -40 to 50ºC (-40 to 122ºF)
3. Storage temperature: -30 to 60°C (-22 to 140°F)

F. Materials

1. Controller: high impact injection-molded ABS/PC plastic

2. All weather cabinet: linear low-density polyethylene with UV-inhibitors

3. Pump enclosure: corrosion-resistant polycarbonate door, high impact-resistant plastic, polyphenylene sulfide track

4. Weighted intake strainers in standard size, high velocity, or low profile for shallow depth applications: Teflon and/or 316 stainless steel

5. Tubing:

   a. Pump tube: 0.95 ID x 0.16 OD cm (3/8 ID x 5/8 in. OD)

   b. Intake tube: 9.5 mm (3/8 in.) ID vinyl or Teflon® lined polyethylene in 25-foot length

G. Exterior dimensions: 51” H x 30” W x 32” D

H. Design and Operation

1. The controller housing of the AS950 sampler is submersible, watertight, dust-tight, corrosion- and ice-resistant to NEMA 4X, 6, IP68 standards.

2. The Graphics Display is 1/4 VGA, Color; self-prompting/ menu-driven program.

3. The desiccant cartridge, which prevents moisture from accumulating inside the controller electronics area, shall be visual and accessible externally from the side of the controller; the replacement of the desiccant shall not require tools or disassembly of controller from base.

4. The high-speed peristaltic sample pump shall use four spring-loaded rollers and shall be accessible by a clear hinged cover with single thumbscrew.

5. Refrigerated cabinet is insulated with 3-inch rigid foam insulation on the walls, 6 inches on the bottom and 5 inches on top. The cover for the controller compartment shall also be insulated.

6. The cabinet shall have a heavy-duty compressible gasket on controller compartment lid, compressor compartment lid and refrigeration compartment door.

7. The refrigeration components and copper plumbing shall be corrosion protected with conformal coating.

8. The thermal control system is digital microprocessor-based and responds to a system of temperature sensors that continually monitor the evaporator plate, controller compartment air temperature, and refrigerated compartment air temperature.

9. An air sensing thermostat is capable of maintaining sample liquid within specified limits.

10. The power requirement is 115 Vac, 60 Hz.

11. Communication:

    a. USB and optional RS485 (Modbus) permits embedded software upgrades in the field.

    b. FSData data management software linked directly to computer via USB cable.

12. The membrane switch keypad user interface is self-prompting/menu driven program with 2 multiple function soft keys.

13. Sampling pacing modes shall include Time Weighted, Flow Weighted, Time Table, Flow Table, and Event.

14. Internal software shall be protected by a 7 amp fuse.

15. Diagnostics: View event and alarm logs.

16. A program lock shall be provided for access code protection to prevent tampering of program and system settings.

17. The sampler is convertible to composite operation by installing a composite container and full bottle shut off.

18. Sample container: 5.5-gallon polyethylene bottle with lid

19. Sample programming features:

    a. Dual programming: Up to 2 sample programs can be run sequentially, in parallel, or according to the day of week scheduling; enabling a single sampler to function like multiple samplers.

    b. Status Screen: Communicates what program is running, if there are any missed samples, when the next sample will be taken, how many samples remain, number of logged channels, time of last measurement, memory available, number of active channels, if alarms were triggered, when alarms were triggered, active sensors and cabinet temperature.

20. Datalogging

    a. Sample History: Stores up to 4000 entries for sample time stamp, bottle number and sample status (success, bottle full, rinse error, user abort, distributor error, pump fault, purge fail, sample timeout, power fail and low main battery).

    b. Measurements: Stores up to 325,000 entries for selected measurement channels in accordance with the selected logging interval.

    c. Event Log: Stores up to 2000 entries. Records Power On, Power Fail, Firmware Updated, Pump Fault, Distributor Arm Error, Low Memory Battery, Low Main Battery, User On, User Off, Program Started, Program Resumed, Program Halted, Program Completed, Grab Sample, Tube Change Required, sensor communication errors, cooling failed, heating failed, thermal error corrected.

21. Automatic shutdown modes:

    a. Multiple bottle mode: after complete revolution of distributor arm (unless continuous mode is selected).

    b. Composite mode: after preset number of samples have been delivered to composite container, from one to 999 samples, or upon full container.

22. Sample Collection:

a. Sample distribution modes include single bottle composite, multi-bottle composite, multi-bottle discrete, bottles per sample, samples per bottle or a combination of bottles per sample and samples per bottle.

b. Manual grab sample can be made with the sampler to deliver a grab sample to a specific bottle location.

c. The intake air purge is made automatically before and after each sample. The duration automatically compensates for varying intake line lengths.

d. The intake line is optionally rinsed with source liquid prior to each sample from one to three times.

e. The sample collection cycle is optionally repeated from one to three times if a sample is not obtained on the initial attempt.

I. Accessories and Spare Parts

1. Manufacturer shall furnish one (1) set of standard accessories and spare parts:

a. Controller compartment heater

b. Bottle kits

c. Peristaltic pump tubing (50-feet)

d. Vinyl intake tubing (100-feet)

e. Strainer

f. AC battery back up

g. Cables and interfaces

h. Anchor brackets

i. FSData software

j. IO9000 Input/Output Module.

2.5 CONTROL SYSTEM PROGRAMMING

A. The CSI shall program the PLCs and HMI to incorporate the inputs and outputs (I/O) and provide the control system functions listed in Table 40 70 00-1.

B. The hardware for the PLC and HMI are specified in Division 26. The HMI software shall be FactoryTalk View Machine Edition.

C. The CSI shall program the HMI to display system operating information in both custom color graphics and text format. The information shall be continuously updated.

D. The CSI shall program the HMI to display the status and alarm conditions of operating equipment and processes, to enable operating setpoints to be entered into the program, and to allow the selection of manual or automatic operating modes of equipment.

E. The CSI shall program the HMI to display data measured by process instrumentation in trending charts.

F. The CSI shall program the HMI to display alarms and tabulate alarm history.

PART 3 EXECUTION

3.0 FACTORY TESTING

A. Factory testing for PLCs, HMIs, and control panels is specified in Division 26.

3.1 INSTALLATION

A. Contractor shall install the equipment specified herein, in accordance with the Manufacturer's recommendations, as shown on the Drawings, and/or as directed by the Engineer.

B. Installation for PLCs, HMIs, and control panels is specified in Division 26.

3.2 FIELD INSTRUMENT CALIBRATION

A. The CSI shall inspect, calibrate, and complete a Field Instrument Calibration Form for all field-mounted process instruments specified herein and furnished or relocated in this Contract.

3.3 ON-SITE FUNCTIONAL TESTING

A. The CSI and Electrical Contractor shall perform functional testing of the complete control system in the field and shall verify that the system operates in accordance with the specifications including all operating, monitoring, shutdown, and alarm functions.

*** * * END OF SECTION * * ***

Table 40 70 00-1. Instrument List and Functional Requirement				
Tag No.	**Instrument Code (1)**	**Location (2)**	**Description and Function**	**PLC I/O (3)**
010	FE FIT	Existing Site Vault	Flow Element. Magnetic Flow Meter. Flow Indicator/Transmitter.	
	FIR FIQ	MCP/PLC-WWTP/HMI	Flow Indicator/Recorder. Trendline graphical display. Flow Indicator/Totalizer. Totalizes flow on a 24-hour basis and displays total.	AI
011	ZCV	New Site Vault	Position Control Valve. Modulating with Remote-Off-Local Switch.	
	ZCC ZI ZIO ZIC YA	MCP/PLC-WWTP/HMI	Position Controller. Opens modulating valve when flow from FE012 is greater than 150,000 Gallons Per Day (GPD) and closes valve when flow is less than 150,000 GPD. Position Indication. Percent open. Position Indication. Fully Open. Position Indication. Fully Closed. Status Alarm. Motorized valve controller fault.	AO AI DI DI DI
012	FE FIT	Inlet to WWTP	Flow Element. Magnetic Flow Meter. Flow Indicator/Transmitter.	
	FIR FIQ	MCP/PLC-WWTP/HMI	Flow Indicator/Recorder. Trendline graphical display. Flow Indicator/Totalizer. Totalizes flow on a 24-hour basis and displays total in GPD.	AI
013	S1	Inlet to WWTP	Sampler. In auto mode, sample frequency controlled in proportion to flow or on a timed basis.	
	FQC	MCP/PLC-WWTP/HMI	Flow Proportional Controller for Sampler. Transmits FE012 signal to sampler.	AO
021	FE FIT	Outlet from WWTP	Flow Element. Magnetic Flow Meter. Flow Indicator/Transmitter.	
	FIR FIQ	MCP/PLC-WWTP/HMI	Flow Indicator/Recorder. Trendline graphical display. Flow Indicator/Totalizer. Totalizes flow on a 24-hour basis and displays total in GPD.	AI
022	FE FIT	Outlet from WWTP	Flow Element. Magnetic Flow Meter. Flow Indicator/Transmitter.	
	FIR FIQ	MCP/PLC-WWTP/HMI	Flow Indicator/Recorder. Trendline graphical display. Flow Indicator/Totalizer. Totalizes flow on a 24-hour basis and displays total in GPD. Also displays the sum of FIQ 021 and 022 in GPD.	AI
023	AE AIT	Outlet from WWTP	Turbidity Analyzer. Turbidity Indicator/Transmitter.	
	AIR	MCP/PLC-WWTP/HMI	Turbidity Indicator/Recorder. Trendline graphical display.	AI

Table 40 70 00-1. Instrument List and Functional Requirement				
Tag No.	**Instrument Code (1)**	**Location (2)**	**Description and Function**	**PLC I/O (3)**
024	S2	Outlet from WWTP	Sampler. In auto mode, sample frequency controlled in proportion to flow or on a timed basis.	
	FQC	MCP/PLC-WWTP/HMI	Flow Proportional Controller for Sampler. Transmits the sum of FIR 021 and FIR 022 signal to sampler.	AO
041 042	TS/A TS PS	Blowers	Temperature Switch (thermal overload) for motor. Temperature Switch for blower discharge. Pressure Switch for blower discharge.	
	HOA RL YA TA PA	LCP-BLR	Hand-Off-Auto Switch. Auto control by PLC. Run Light. Status Alarm for motor thermal overload. High Discharge Temperature Alarm. High Discharge Pressure Alarm.	
	RI RC RQI YA TAH PAH	MCP/PLC-WWTP/HMI	Run Indication. Run Command for blower. Blowers can be turned On or Off remotely from HMI. Run Time Indicator. Totalizes and displays run time in hours for each blower separately. Manually reset. Status Alarm for motor thermal overload. High Discharge Temperature Alarm. High Discharge Pressure Alarm.	DI DO DI DI DI

Notes for this Table:

1) Refer to Process Instrumentation Legend and Codes drawing for instrument letter codes.
2) Location Abbreviations:
    a. Local Control Panel (LCP)
    b. Main Control Panel (MCP)
    c. Human Machine Interface (HMI) (Operator Interface)
    d. Programmable Logic Controller (PLC)
    e. Sampler (S#)
3) PLC Input/Output Codes:
    a. Analog Input (AI)
    b. Analog Output (AO)
    c. Discrete Input (DI)
4) Discrete Output (DO)

SECTION 43 11 33
ROTARY LOBE BLOWERS

PART 1 GENERAL

1.1 DESCRIPTION OF WORK

A. Contractor shall furnish two (2) positive displacement rotary lobe blower packages, complete.

B. The work shall include fabrication, factory-testing, delivery, installation, installation inspection, and field testing.

1.2 RELATED WORK

A. Division 26 – Electrical

1.3 REFERENCE STANDARDS

A. American Society of Mechanical Engineers (ASME):

1. ASME B40.100 - Pressure Gauges and Gauge Attachments

B. ASTM International (American Society for Testing and Materials):

1. ASTM A48 / A48M-03 - Standard Specification for Gray Iron Castings

C. International Standards Organization (ISO)

1. ISO 2151-2004 (E) - Noise Test Code for Compressors and Vacuum Pumps

D. National Electrical Manufacturers Association (NEMA):

1. NEMA 250 - Enclosures for Electrical Equipment (1000 Volts Maximum)
2. NEMA MG1 - Motors and Generators

E. Occupational Safety and Health Administration (OSHA)

1. Title 29, Part 1910 - Occupational Safety and Health Standards, Code of Federal Regulations

F. UL Underwriters Laboratories (U.L.)

1. All equipment and devices shall be listed by and bear the Underwriters Laboratories (U.L.) Inc U.L. label or the CSA-C/US label.
2. UL94 Standards for Flammability

1.4 SUBMITTALS

A. Shop Drawings:

1. Drawings shall show the general dimensions of the equipment and shall confirm the size of the unit.
2. Drawings shall include size and location of required piping and utility connections, structural supports, construction details, weights of major components, materials of construction of all components.

B. Product Data:

1. Manufacturer’s catalog information.
2. Manufacturer’s specifications for materials and manufacturing.
3. Detailed information for all ancillary items such as hardware, mounting frames, enclosures, valves, gauges, filters, instrumentation, and all accessories.
4. Information on equipment field erection requirements including total weight of assembled components and weight of each subassembly.
5. Installation and storage instructions.
6. Performance curves showing capacity in cubic feet per minute, discharge pressure and blower horsepower from 0 percent to 130 percent of design capacity, dB(A) noise pressure level.
7. Performance curves of silencers and filters showing capacity in cfm and pressure drop from 0 percent to 130 percent of design capacity. If performance curves are not available, then other such data or guarantee that demonstrates that the silencers are properly sized.
8. Complete noise attenuation data.
9. Motor nameplate data. Refer also to Division 26 for submittal requirements.
10. Technical data sheets on the factory applied coating systems.
11. Manufacturer's warranty as specified.
12. Information and location of nearest parts, service crews, and repair facilities to the Owner.
13. Bill of materials.

C. Certified Factory Test Reports as specified herein.

D. Operation and Maintenance Manuals:

1. Equipment summary sheet with contact information for Manufacturer and Manufacturer’s Representative, equipment model and serial numbers
2. Performance and nameplate data
3. Lubrication information
4. Control wiring diagrams
5. Startup procedures
6. Operating procedures
7. Preventive maintenance procedures
8. Overhaul instructions
9. Parts list
10. Spare parts list
11. Installation and storage instructions

12. Warranty

13. Approved shop drawings and product data

1.5 QUALIFICATIONS

A. The manufacturer of the products specified in the Section shall be fully experienced, qualified, and reputable in the manufacture of such equipment.

B. Manufacturer shall have a qualified factory-trained representative and service center qualified in the repair of the blowers permanently located within a 25-mile radius of the project site.

C. Qualified Manufacturer

1. ROOTS EASYAIR® package with URAI 22 blowers represented by Rogers Machinery Company, Inc., 3509 Galvin Road, Centralia, WA, 98531, Phone 360-736-9356.

2. Engineer-approved equal.

1.6 PAYMENT

A. The cost for the work and materials specified herein shall be included in the lump sum cost of the wastewater treatment plant.

1.7 WARRANTY

A. Manufacturer shall warrant the materials and equipment specified herein to be free of defects in materials and workmanship for a period of two (2) years from the commissioning.

PART 2 PRODUCTS

2.1 ROTARY LOBE BLOWERS

A. Type:

1. Positive displacement rotary lobe blower: 2 or 3-lobe, rotary, constant volume, variable pressure type, positive displacement

B. Performance criteria and operating conditions:

1. Maximum blower speed: 5,000 RPM

2. Air flow capacity, maximum, Standard Cubic Feet per Minute (SCFM) (at 14.7 PSIA, 68 deg F, 36% RH): 60 SCFM at 7 psi differential pressure

3. Inlet air temperature, maximum: 90°F

4. Site elevation: 120 ft MSL

5. Inlet relative humidity (RH), maximum: 85%

6. Maximum Free Field Noise Pressure @ 3Ft: 85 dB(A)

C. Casing

1. The blower casing shall be of one-piece construction, with separate side plates or head plates that are bolted and pinned to the housing.

2. Materials shall be cast iron ASTM A48 suitably ribbed to prevent distortion under the specified operating conditions.

D. Rotors

1. The rotors shall be 2-lobe or 3-lobe type and shall operate without rubbing or liquid seals or lubrication.

2. The shafts shall be cast integrally with the impellers.

3. The rotors shall be statically and dynamically balanced.

E. Bearings

1. Each rotor-shaft shall be supported by anti-friction bearings and fixed to control the axial location of the rotor-shaft in the unit.

F. Timing Gears

1. The impellers shall be timed by a pair of carburized and ground alloy steel timing gears.

2. Gears shall be secured to the shafts with a tapered interference fit and secured by a locknut.

G. Seals

1. Seals shall be designed to prevent lubricant from leaking into the air stream as well as to prevent oil from leaking out of the machine.

H. Lubrication

1. Timing gears shall be splash-oil lubricated.

2. Each blower shall receive its initial synthetic oil filling at the factory.

2.2 INLET FILTER AND SILENCER

A. Each package shall be supplied with an inlet filter housed in a coated carbon steel housing with a top access cover and paper filter element.

B. Filter pressure losses shall be included in the blower performance calculation.

2.3 INLET AND DISCHARGE SILENCERS

A. Each package shall be supplied with an inlet and discharge silencer.

B. The silencers shall be chamber type designed for maximum sound attenuation and shall not use fibrous or absorption materials of any kind.

C. Each silencer shall be fabricated of a single shell of pressure vessel quality steel with continuous welds.

D. Inlet and discharge silencer pressure losses shall be included in the blower performance calculation.

E. The silencers shall have a connection for a drain.

2.4 BASE FRAME

A. The base frame shall be constructed from welded carbon steel or cast iron that shall be designed to maintain alignment of the blower internal components and the drive during operation.

B. The base frame shall be designed to resist distortion while being installed on vibration isolating mounts.

C. The blower manufacturer shall supply a stainless steel grounding lug fully welded to the base.

2.5 DISCHARGE FLEXIBLE CONNECTORS

A. Each package shall be connected to the plant piping via a flexible connector located downstream of the discharge silencer.

B. Flexible connectors shall be a silicone reinforced sleeve secured with stainless steel sleeve clamps rated for the maximum discharge temperature and pressure.

2.6 ELECTRIC MOTOR

A. Manufacturer: US Motors Nidec

B. Type: Premium Efficiency, Hostile Duty

C. Enclosure: Totally Enclosed Fan Cooled (TEFC)

D. Frame type/size: NEMA standard suitable for overhung belt drive

E. Torque rating: NEMA B

F. Duty cycle: continuous

G. Service factor: 1.15 on sine wave power

H. Speed, maximum: 1,800 RPM

I. Electrical service: 208-230 Volts, 1-Phase, 60 Hertz

J. Motor Size, minimum: 5 HP

K. Blower manufacturer shall be responsible for coordinating the starting torque requirement of the blower and the motor.

L. Motor shall comply with Division 26.

2.7 V-BELT DRIVE

A. Each package shall be supplied with a v-belt drive that shall be of the high capacity type, oil and heat resistant.

B. Drive shall be designed for a minimum service factor of 1.4 times the maximum operating BHP, or 1.15 times the motor nameplate HP, whichever is larger.

C. Sheaves shall be dynamically balanced regardless of the operating speed. Sheaves shall be interchangeable for speed adjustment.

D. The belt tension device shall be designed to allow the maintenance personnel to replace the belts without exerting or lifting over 40 pounds and without the use of lifting, jacking or pulling tools.

E. V-belts shall be banded.

2.8 V-BELT GUARD

A. The belt drive shall be guarded in compliance with OSHA regulations.

B. Portions of the guard shall be easily removable allowing for belt inspection and replacement.

C. Guard material shall be perforated carbon steel.

2.9 VIBRATION ISOLATION

A. Each package shall be supplied with heavy duty vibration pads with leveling screws.

B. Blower manufacture shall be responsible for attenuating noise and vibration in the blower package such that no special installation base is required, nor shall any additional measures be required to reduce vibrations being transmitted from the blower package to the base or the piping.

2.10 PRESSURE RELIEF VALVE

A. Each package shall be supplied with a single pressure safety relief valve on the discharge side of the blower mounted downstream of the discharge silencer and upstream of the check valve.

B. The safety valve shall be set by the blower Manufacturer to protect the blower from exceeding its maximum pressure rating and shall be sized to pass 100% of the design flow.

C. The safety valve shall be field-adjustable and spring-loaded.

D. The pressure relief valve shall be housed by the sound enclosure and shall relieve into a segmented section of the sound enclosure.

E. Valve shall be steel and suitable for the maximum discharge temperature of the blower.

2.11 CHECK VALVE

A. Each package shall be supplied with one check valve to be installed on-site by the installation Contractor.

B. The check valve shall be of the full-bore, low pressure-drop, flapper type design with a steel body, and steel flap embedded in silicone with full-contact seal.

C. The check valve shall be removable without disturbing the piping.

D. Pressure losses produced by the check valve shall be included in the blower performance calculation.

E. Check valve shall be rated for the maximum discharge temperature and pressure of the blower.

2.12 PRESSURE MEASUREMENT DEVICES

A. Inlet Vacuum Gauge

1. A vacuum pressure gauge shall be installed on the inlet of each blower.

2. Gauge shall function as a filter maintenance indicator.

3. Manufacturer and Model: Dwyer Minihelic 2-5040 or Engineer-approved equal

4. Accuracy: ≤5% full scale

5. Range: -40 to 0 inches water column
6. Dial size: 2.5 inch
7. Pressure limit: 30 psig
8. Temperature range: 20 to 120 deg F
9. Case: Open front
10. Case material: Glass-filled nylon with acrylic lens

B. Discharge Pressure Gauge

1. A pressure gauge shall be installed on the discharge of each blower.
2. Manufacturer and Model: Ashcroft Type 1009 SW or Engineer-approved equal.
3. Per ASME B40.100, the full scale pressure range shall be approximately twice the normal operating pressure. The maximum operating pressure should not exceed approximately 75% of the full scale range.
4. Accuracy: 1% full scale (Grade A, ASME B40.100)
5. Range: 0 – 15 psi
6. Dial size: 2.5 inch
7. Case: Open front
8. Case material: 316 Stainless steel
9. Weather protection: Dry Case IP54
10. Window: Polycarbonate
11. Dial: White background, black figures and graduations
12. Pointer: Black aluminum
13. Movement: Stainless steel
14. Bourdon tube and process connection: 316 Stainless steel
15. Process temperature range: -20 to 250 deg F or the maximum discharge temperature of the blower whichever is greater
16. Ambient temperature range: -40 to 200 deg F

C. Discharge High Pressure Switch

1. A high discharge pressure switch shall be installed on the discharge of each blower to protect the blower from excessive operating pressure.
2. Manufacturer and Model: Ashcroft B-Series or G-Series, Type 400, or Engineer-approved equal.
3. Operating range, discharge: 0 to 15 psig
4. Pressure setting range: between 15 and 100% of operating range
5. Enclosure: NEMA 4X
6. Housing: Epoxy coated aluminum

7. Actuator Seal: Viton
8. Process temperature range: 20 to 300 deg F
9. Ambient temperature range: -20 to 150 deg F
10. Influence of ambient temperature: ± 1% of full scale/50 deg F temperature change
11. Output signal: Two (2) (dual) SPDT 15A, 125/250/480 Vac
12. Switch is mounted inside the enclosure and includes silicone tubing and fittings. Switch wiring to be furnished by installation Contractor.

2.13 TEMPERATURE MEASUREMENT DEVICES

A. Discharge Temperature Gauge

1. A discharge temperature gauge shall be installed on the discharge of each blower.
2. Manufacturer and Model: Weiss 3VBM25 or Engineer-approved equal
3. Process temperature range: 50 to 300 deg F
4. Display case material: Stainless steel
5. Dial size: 2.5-inch
6. Window: Shatterproof glass
7. Display: Aluminum, white background, black figures and graduations
8. Stem material: 316 stainless steel
9. Accuracy: ± 1.0% of full scale
10. Accessories: 316 stainless steel thermowell

B. Discharge High Temperature Switch

1. A high discharge temperature switch shall be installed on the discharge of each blower.
2. Manufacturer and Model: Ashcroft B-Series or G-Series, Type 400, or Engineer-approved equal
3. Process temperature range: 50 to 300 deg F
4. Accuracy: ± 1.0% of full scale
5. Protection/enclosure: NEMA 4X
6. Housing: Epoxy coated aluminum
7. Output signal: Two (2) (dual) SPDT 15A, 125/250/480 Vac
8. Switch is mounted inside the enclosure and includes thermowell, capillary, and fittings. Switch wiring to be furnished by installation Contractor.
9. Accessories: 316 stainless steel thermowell

2.14 ACOUSTICAL SOUND ENCLOSURE

A. Each blower package shall be supplied with a sound attenuation enclosure covering the entire blower package.

B. The enclosure shall be furnished with a weatherproof aluminum structural frame, enclosed with removable hinged panels to allow 360-degree access. Panels shall be minimum 18-gauge steel sheet powder coated with textured matte finish.

C. The enclosure shall be suitable for outdoor installation suitable for the wind speed and snow loads per the applicable site building code.

D. The enclosure shall be insulated, with 2-inch-thick polyurethane foam. Foam facing shall be protected with a micro-perforated aluminized film meeting UL 94 HF- 2 flammability rating.

E. Enclosure ventilation intake and exhaust ducts shall be furnished with sound attenuation lining.

F. The enclosure shall be furnished with an electric ventilation fan, low profile and quiet type, 120 VAC, sized for 10 degrees C temperature rise, includes adjustable thermostat and branch protected termination enclosure. Contractor shall provide a separate 120 VAC power to the fan termination enclosure.

G. A grounding strap shall be installed between the blower base and the package skid to bypass any vibration isolating mounts.

H. Blower system, including silencers and sound attenuating housing, shall be designed for operation at noise level not to exceed 65 dB(A) at 3 ft from the blower assembly in any direction in free-field conditions. If special equipment for cooling and/or noise attenuation is required, it shall be provided by the blower manufacturer.

2.15 COATINGS

A. Coatings shall be per supplier's standard complying with the following criteria.

B. Excepted for machined sealing and machined mounting surfaces, the package shall be painted.

C. Aluminum, stainless steel, and brass shall not be painted unless otherwise specified.

D. Galvanized components may only be painted with appropriate surface preparation.

E. The supplied motor shall not be over sprayed and will be supplied with the motor manufacturer's standard protection and paint color.

F. Cast iron and carbon steel shall be coated with a minimum total dry film thickness of 70 µm.

G. Sound enclosure shall be powder-coated with a minimum total dry film thickness 70 µm with a process proven to pass a 500-hour salt spray test with no rust evidence.

H. Equipment shall be touched up in the field as required.

2.16 SPECIAL TOOLS AND SPARE PARTS

A. Furnish the following spare parts and supplies:

1. Three (3) spare filter elements
2. Two (2) gallons manufacturer's standard synthetic oil. Each blower shall receive it initial oil filling at the factory.

PART 3 EXECUTION

3.1 FACTORY TESTS

A. A package mechanical run test at the specified maximum speed and pressure shall be performed on each blower to document that the blower has achieved the specified performance.

B. A noise test shall be performed in accordance with ISO 2151-2004, sound pressure level only, with +/-3 dB(a) tolerance. The measurements shall be calculated to a free field environment.

C. Motor shall be factory tested in accordance with Division 26.

D. Manufacturer shall submit certified copies of the factory test reports to the Engineer prior to shipment.

3.2 INSTALLATION

A. Installing Contractor shall install the equipment specified herein in accordance with the Manufacturer's recommendations and as shown on the Drawings. Contractor shall:

1. Check that the concrete foundation is even and that the base alignment has been checked and leveled with alignment plates.
2. Properly anchor and grout the base.
3. Properly ground the enclosure and base frame.
4. Check and align blower and motor.
5. Properly support and secure discharge piping.
6. Install the flexible connector and check valve on the discharge of each blower.
7. Apply lubricants as required.
8. Verify that blower and motor rotation direction are correct.
9. Check that v-belt tension is within the recommended range, or adjust as required, and check that v-belt guard is installed.
10. Wire the enclosure fan to power and check that fan moves freely.
11. Install, secure, and wire discharge pressure and temperature switches to control system. Install pulsation dampeners, thermowells, and capillary tubing where required.
12. Install and wire motor in accordance with Division 26 and motor manufacturer's instructions.

B. Manufacturer's representative shall inspect the installation and certify the commissioning of the equipment.

3.3 FIELD TESTING

A. On-site field testing shall include:

1. Testing the discharge high pressure switch for automatic shutdown.
2. Testing the discharge high temperature switch contacts.
3. Testing the motor thermostat contacts.
4. Testing the motor current overload setting for automatic shutdown.
5. Testing the discharge pressure relief valve for the proper setting.
6. Measuring the inlet vacuum, discharge pressure and temperature, motor current, and voltage at the specified operating conditions.

B. Motor field testing shall comply with Division 26.

*** END OF SECTION ***

SECTION 44 42 00
Submersible Pumps and Pre-packaged Pump Stations

EQUIPMENT
Plant Drain Pump Station – (Located at the WWTF)
Wellness Center Pump Station

PART 1 GENERAL

1.1 DESCRIPTION OF WORK

Work covered by this section consists of Plant Drain and Wellness Center duplex pre-packaged effluent vertical rail mounted submersible pumping stations. The pre-package pump stations shall be UL QCZJ listed, and include a fiberglass wet well with integral, valve vault, pumps, piping, check and plug valves, controls, and all other appurtenances for complete and operational pumping station.

The Contractor will provide the pre-packaged pump stations as well as such work as excavation, imported backfill and compaction and installation of anti-floatation concrete pad.

1.2 RELATED SECTIONS

Invitation to Bid, Instructors to Bidders and General Conditions of the Contract.

Division 01 – General Requirements.

WSDOT Divisions.

Amendments to the WSDOT Standard Specifications (Special Provisions).

Section 33 32 19 – Septic Tank Effluent Pump (STEP) System.

Section 33 32 20 – Duplex STEP System.

Division 26 – Electrical.

1.3 REFERENCE STANDARDS

The following is a list of standards that may be referenced in this section:

American Society for Testing and Materials (ASTM):
A48 – Standard Specification for Gray Iron Castings.
A126 – Standard Specification for Gray Iron Castings for Valves, Flanges and Pipe Fittings.
A536 – Standard Specification for Ductile Iron Castings.
D3753-99 – Standard Specification for Glass Fiber Reinforced Polyster Manholes and Wet Wells.

American Water Works Association (AWWA):
C504 – AWWA Standard for Rubber Seated Butterfly Valves
C507 - AWWA Standard for Ball Valves, Shaft or Trunnion Mounted -6 in through 48-in for water pressures up to 300 psi.

Hydraulic Institute Standards (HIS):
11.6 – Submersible Pump Test.
14.6 – Rotodynamic Pumps for Hydraulic Performance Acceptance Tests.

National Electrical Manufacturer's Association (NEMA).

National Fire Protection Association (NFPA):

70 – National Electrical Code (NEC)
497 – Recommended Practice for the Classification of Flammable Liquids, Gases, or Vapors and of Hazardous (Classified) Locations for Electrical Installations in Chemical Process Areas.

Underwriters Laboratory (UL).

1.4 PERFORMANANCE AND DESIGN REQUIREMENTS

General

Stable and free of cavitation and noise throughout the specified operating head range.
The suction elbow and check valve shall be considered a part of the pump.
Design based on running clearance between the impeller and suction cover of at least 0.02 inch.
Performance requirements based on a water temp of 68 degrees F.
Fluid nonabrasive.
Pump capable of passing ¾-inch maximum solids.

Environmental Conditions

Temperature range: 40 degrees to 68 degrees F.
Setting elevation: 100 ft above sea level.

Plant Drain Pumps:

Number of Units: 2.
Pumped liquid: Treated effluent from WWTF and lagoons.
Constant speed drive.
Suction nozzle diameter: 2 inch.
Discharge nozzle diameter: 2 inch.

Rotation as viewed from coupling end: Clockwise.
Minimum pump efficiency at rated head and capacity: 50 +/- 2 percent.
Shutoff Head: 78 ft.
Two Duty Point Conditions:
Minimum Wet Well Level: One pump in operation: 79 gpm at 38 ft of head at duty point.
Maximum Wet Well Level: One pump in operation: 85 gpm at 33 ft of head at duty point.

Wellness Center Pumps:

Number of Units: 2.
Pumped liquid: Treated wastewater from STEP systems.
Constant speed drive.
Suction nozzle diameter: 2 inch
Discharge nozzle diameter: 2 inch
Rotation as viewed from coupling end: Clockwise.
Minimum pump efficiency at rated head and capacity: 55 percent.
Two Duty Point Conditions:
Minimum Wet Well Level: One pump in operation: 45 gpm at 41 ft of head at duty point
Maximum Wet Well Level: One pump in operation: 50 gpm at 39 ft of head at duty point.

1.5 SUBMITTALS

Shop Drawings: Submit complete fabrication, assembly foundation, and installation drawing for all pumps, motors, and accessories to illustrate construction and assembly of components.

Product data: Submit sufficient data to verify compliance with specifications to include materials, parts, devices, and accessories:

Pump: Manufacturer name, model, horsepower, complete performance data curves over the entire operating range of the pumps, from shutoff to maximum capacity. Indicate separately capacity, head, operating speeds, pump efficiency and brake horsepower (bhp) and minimum submergence required at guarantee point for each equipment assembly. Include details on size of suction and discharge nozzles, type of bearings, type and construction of seals, type of couplings, data on shop coating, net weight of components, and total assembly including motors.
Motor: Manufacturer name, model, rated size hp, type of shaft and bearings, efficiency, full load current, power voltage, phase, frequency, and any provisions under Division 26 – Electrical.

Manufacturer’s installation instructions:

Provide connection requirements and start up instructions for pumps.

Manufacturer’s field start up report:

Indicate personnel present and actual tests and start up procedures that were performed by the manufacturer’s representatives.

Manufacturer’s Certificate:

Certify that products meet or exceed specified requirements and are suitable for the use intended.

1.6 OPERATION AND MAINTENANCE DATA

Operation data: Include manufacturer's instructions, description of system operation, start-up data, trouble-shooting check lists, and repair data for pumps and motors.

Maintenance data: Include manufacture's literature, cleaning procedures, replacement parts lists, wiring diagrams for pumps and motors.

1.7 DELIVERY, STORAGE AND HANDLING

Deliver, store, protect, and handle products to site.

Accept pumps and components on site in factory packing. Inspect for damage. Comply with manufacturer's installation instructions.

1.8 SPARE PARTS MAINTENANCE MATERIAL

Contractor to provide one spare pump on shelf.

For each pump furnish:

Complete set of gaskets and O ring seals,
Two pump impellers.

1.9 WARRANTY

Warranty shall be valid for one (1) year beginning on the date of Substantial Completion.

PART 2 PRODUCTS

2.1 Basis of Design

The specifications provided for the Plant Drain and Wellness Center packaged pump stations were developed based on packaged units assembled and provided by PumpTech, Inc. Other assembled units may be submitted 10 days prior to bid opening for consideration and approval. This specification will be used to evaluate the submitted packaged station(s) based on each component of the station being equal in quality and performance than the individual component specified. Engineer shall evaluate submitted alternatives and either accept or reject the submittal as an approved equal within 5 working days. Engineer's acceptance does not relieve the Contractor of the responsibility to provide a complete package station that fully complies with these specifications. Failure to submit alternative package pump stations 10 days prior to bid opening may result in the alternative being rejected. Bidding alternatives without prior approval will be at the sole risk of the bidder.

2.2 MATERIALS:

Fiberglass Wet Well and Valve Vaults:

The basin shall be manufactured from fiberglass reinforced polyester resin, using grades of resin and fiberglass considered acceptable for use in water and wastewater environments. Resin fillers shall not be used. The reinforcing materials shall be commercial grade of E-type glass fibers in the form of mat, continuous roving, chopped roving, or roving fabric, having a coupling agent that will provide a suitable bond between the glass reinforcement and the resin.

Vertical shell walls shall be manufactured using a helical winding process. The interior surface shall be a resin rich layer of fiberglass or organic surface veil. The surface shall be free of crazing, delamination, blisters larger in diameter than ½-inch (12.7-mm), and wrinkles of 1/8-inch (3.18- mm) or greater in depth. The exterior surface shall be free of blisters larger in diameter than ½-inch (12.7-mm) and any delamination. To provide the required strength, the shell wall thickness shall vary with the basin height.

The inner surface shall be free of cracks and crazing with a smooth finish and with an average of not over two pits per square foot, providing the pits are less than 1/8" in diameter with not over 1/32" deep and are covered with sufficient resin to avoid exposure of inner surface fabric. Some waviness shall be permissible as long as the surface is smooth and free of pits. A White Gelcoat shall be the finishing surface for the interior of the Wet Well / Valve Vault. Other coatings or colors are not acceptable.

The exterior layer of body of laminate shall be of construction suitable for the service intended and contain sufficient glass by weight to provide the aggregate strength necessary to meet the tensile and flexural requirements. The exterior surface shall be relatively smooth with no exposed fibers or sharp projections. Handwork finish is

acceptable, but enough resin shall be present to prevent fiber pop. The Wet Well / Valve Vault shall have a Torque Tan Exterior Gel Coat.

The Wet Well / Valve Vault must be designed to withstand wall collapse based on the assumption of hydrostatic type loading by backfill with a density of 120 lb./ft.3. The tank wall laminate must be constructed to withstand or exceed two times the actual imposed loading on any depth of basin.

Incorporate an integral Hopper Bottom in the wet well that directs solids into the center of the wet well and into the suction of the pumps.

The wet well bottom shall be constructed by vacuum infusing 3-inch, 2 lb/ft3 polyurethane or polyisocyanurate foam board that is precision cut to the proper diameter of the wet well diameter. The foam board will be bagged and injected with resin to complete the vacuum infusing process. A composite stud plate will then be infused to the base to insure a leak proof installation of the discharge elbow studs. A 3-inch exterior anti-floatation ring will be part of the vacuum infused base. This will also allow anchor blots to secure the tank to the contractor supplied concrete pad.

The Valve Vault bottom shall have a 2 deg slope toward the wet well. A PVC drain from the valve vault back to the wet well shall be installed complete with a “P” trap and check valve that allows water to flow from the valve vault to the wet well but not back into the valve vault.

The width of the first layer of joint overlay shall be 12 inch minimum. Successive layers shall uniformly increase in width to form a smooth contour laminate that is centered on the joint + ½ inch. A highly filled resin paste may be placed in the crevices between joined pieces leaving a smooth surface for lay-up. The cured resin surface of the parts to be joined shall be roughened to expose glass fiber. This roughened area shall extend beyond the lay-up areas so that no reinforcement is applied to an unprepared surface. Surfaces shall be clean and dry before lay-up. The entire roughened area shall be coated with resin after joint overlay is made.

The finished laminate shall be as commercially practicable from visual defects such as foreign inclusions, dry spots, air bubbles, pinhole, dimples, and delamination. The surfaces shall be relatively smooth; hand finish is acceptable, with no exposed fibers or sharp projections.

The top flange shall be molded using RTM, Vacuum Bagging or other closed molded process. The top flange shall be bonded to the basin with a suitable structural adhesive or with polyester resin and glass fiber reinforcement. The top flange shall be a minimum of 3 inches wide.

All penetrations shall be watertight and not jeopardize the structural integrity of the basin. Fastener penetrations below the waterline shall be permanently sealed using resin and fiberglass, structural adhesive, or other approved method. Fastener penetrations below the normal liquid level shall not rely on mastic, silicone, or similar sealant. Piping penetrations shall use one or more of the following sealing methods:

Elastomeric joint seal designed for the application (e.g., Link-Seal, flexible entry boot, or similar).

Flanged fiberglass coupling bonded with structural adhesive or resin/glass fiber.

PVC or ABS fitting bonded with structural adhesive.

Or other approved equal penetration method.

Field installed inverts shall be provided for installation by the contactor. See drawings. The invert pipe shall be made of PVC, Fiberglass or other approved material suitable for below ground sewage or storm water applications. The invert pipe shall have a fiberglass flange that is radiused to the same diameter as the wet well. Field installed inverts are provided to ensure proper alignment with field piping. Field verify these invert elevations shown on the drawings.

Cover:

Minimum of .25-inch Aluminum Diamond Plate with an outside diameter of 1 in minimum over the diameter of the top flange of the fiberglass wet well / valve vault.

Cover shall be secured to the basin with stainless steel bolts, flat washers, lock washers and nuts. Two rows of ¼" x ½" Butyl Tape shall be applied, one on each side of the cover bolts and between the basin and aluminum cover to prevent foreign materials from entering the wet well / valve vault.

Access Hatches:

Provide easy entrance into the wet well and valve vault.

Access hatches sized appropriately to safely and easily remove pumps from the wet well and allow access into the valve vault. Safety Grating is only required on the Wet Well Hatch.

The hatches shall have aluminum diamond plate tops, 316 SS hardware and pad lock pin, lockable hinged safety grating panel and 300 psf load rating.

Safety Grating panel shall be powder coated the color "safety orange" and only required on the wet well access hatch.

2.3 PUMPS, MOTORS, GUIDE RAILS AND OTHER ACCESSORIES

Pumps:

Goulds Pump or approved equal.

Casing and frame: Cast iron, ASTM A48— minimum Class 30.

Impeller: Cast iron, ASTM A48—Class 30.

Shaft: Stainless steel, Series 400.

Mechanical seal: Single seal arrangement:

Seal face material: Silicon Carbide faces. Series 300 SST tension spring. BUNA – N elastomers.

Motors

The integral motor shall be completely sealed from the environment by use of circular cross section O-rings accurately fitted into machined grooves which shall provide designed compression of metal-to-metal fits. Designs which require a specific torque on the casing bolts or which require rectangular gaskets or sealing rings shall not be allowed.

The motor shall be rated for continuous duty under full nameplate load while at full submergence in the wet well.

The motor shall be provided at the specific site conditions of 115, 208 or 230 V, single phase or 200, 230, 460 or 575 V, three phase as required, all shall be at 60 Hz.

Single phase motors shall be capacitor-start. All single-phase motors shall be provided with thermal protection. Single phase motors shall have an on winding sensor with automatic reset.

Three phase motors shall be protected by ambient compensated quick-trip heaters, or, adjustable motor circuit protectors provided in control.

The stator winding shall be open type with class B insulation suitable for operation in clean dielectric oil for efficient heat transfer and lubrication of the ball bearings. The stator shall be a register fit into the bearing housing to ensure positive alignment, and bolted for ease of serviceability.

The motor shall be provided with ball type anti-friction bearings which shall support the heavy-duty rotor shaft and to handle all radial and axial loads imposed by the impeller while limiting shaft deflection at the mechanical seal faces. Sleeve type bearings shall not be considered equal and, therefore, shall not be allowed.

The ball bearings shall be designed for a B-10 life of 30,000 hours minimum. The motor shall be designed and tested to withstand an 18-day locked-rotor operation without damage.

Power Cable:

Power cable shall be sealed at the motor end as it enters the motor casing by a two-part barrier to moisture intrusion.

The oil and chemical resistant grommet shall seal the outer jacket of the power chord.

The isolated conductors with the jacket shall be epoxy poured.

The insulation shall be removed from the individual conductors and the epoxy shall be allowed to form a leak-proof seal against wicking of the power cable between the outer jacket and the insulation of the individual conductors.

The outer jacket of the power cord shall be oil resistant and water resistant. The power cable shall be rated for NEC severe service “S”, type “SJTOW” or “STOW.

Guide Rail System:

Discharge base elbow designed to mount directly on the sump floor shall be supplied for each pump. It shall have a standard 2” NPT connection. The design shall be such that the pump to discharge connection is made without the need for any nuts, bolts or gaskets. The base elbow shall also anchor and align the two (2) one (1)-inch guide rails.

The lift out system shall include an integral check valve in the pull-out-flange. This allows the removal of the check valve with the pump. The body is of Ductile Iron construction that is powder coated for corrosion resistances. Connections and slides will be stainless steel.

The upper guide bracket shall align and support the two guide rails at the top of the sump. It shall bolt directly to the hatch frame and incorporate an expandable rubber grommet for secure rail installation.

The dual rail guide design keeps the pump in proper alignment with the stationary discharge piping. These rails shall be one (1)-inch 304 stainless steel pipe that will attach directly to the base elbow and to the access frame at the top of the wet well by an upper guide rail bracket.

The submersible pump station shall be provided with a Chain Grabber Lifting System. Each pump shall be equipped with a 4 ft. section of 5/16-inch 300 series SST chain and a ¼-inch SST guide cable.

A Chain Grabber link shall be included for use with the pump hoisting system. The Chain Grabber link shall be made of alloy steel and sized to fit the lifting chain.

The lifting chain and the Chain Grabber shall be rated for a minimum working load limit of 500 lbs.

Piping and Valves:

Piping: All pipe and fittings shall be either cast or ductile iron pipe meeting ASTM A48 material specifications. Each pump discharge pipe shall be the same diameter as the discharge of the pump and shall remain that diameter until it exits the tank. A common flanged discharge line shall leave the valve box at an elevation specified by on the engineered drawings. All piping within the package pump stations shall be coated with Tenemec Series system found in 09 96 00. Interior of pipe shall be coated with Protecto 401 or approved equal.

Plug Valves:

Valves shall be of the non-lubricated eccentric type with an elastomer covering all seating surfaces. The elastomer shall be suitable for the service intended. Flanged valves shall be manufactured in accordance with ANSI B16.1 including facing, drilling and flange thickness.

Valve bodies shall be ASTM A-126 Class B cast iron. Valves 2" and larger shall be furnished with a welded-in overlay seat of not less than 90% nickel in accordance with AWWA C507-73. Sprayed, plated or screwed-in seats are not acceptable.

Plugs shall be of ASTM A-536 Grade 65-45-12 in compliance with AWWA C-504 Section 2.2. The plugs shall be of one-piece construction with PTFE thrust bearings on the upper and lower bearing journals to reduce torque and prevent dirt and grit from entering the bearing and seal area.

Check Valves:

Check valves shall be a Ball Check Valve that is part of the pumps guide rail lift out system. It shall be accessible when the pump is removed from the wet well via the guide rail system.

Control Panel:

See Division 26.

Wiring and Conduit:

See Division 26.

Anchor Bolts, Nuts, and Washers:

All nuts, washers, bolts and fasteners of any type shall be constructed of 304 Stainless Steel, all inclusive of the entire station. Never Seize shall be applied to the threads of all nuts and bolts to prevent galling and aid in the removal process.

Level Sensors:

Four (4) Mechanical floats switches will be provided as the primary level control for this station. The mechanical float switches shall incorporate a EZ Connex 4 port quick disconnect system.

Accessories:

Gauges:

Three (3) - 2.5-inch glycerin filled discharge Gauges, 1 common and 1 for each pump. Gauges will be installed at a 45 deg angle on the discharge piping so they are visible from outside the valve vault.

Each gauge shall have an isolation valve and screen to prevent clogging.

Cord Hangers and SST hooks:

Hangers shall be SST mounted under the cover but within arms reach from the wet well access hatch.

Locate cord hangers as far from the invert as possible.

SST hooks shall be welded to the back side of the cord cage to provide a place to hang the cord stain relief.

2.4 FABRICATION

Casing:

The casing shall be cast from ASTM A48 class 30 gray cast iron of sufficient thickness to withstand 1.5 times the shut off pressure generated by the largest impeller available for this model in accordance with current revision of the HIS. The discharge connection shall be a standard 2-inch NPT suitable for direct connection to the station piping, without the use of any external fittings or adapters for vertical orientation of the discharge direction. Integral feet of cast iron shall be made a part of the casing for accurately positioning the pump suction opening at the correct elevation off the sump floor for good pump down capability.

Impeller:

Accurately machined and shall be semi-open with ejector (pump out) vanes on the top of the impeller for protection of the mechanical seal and dynamically and hydraulically balanced.

Free of abrupt transition, projections, or cavities.

Single plane spin balancing shall be required for smooth operation. The impeller shall be threaded to the solid series 400 SST shaft.

Impellers shall be secured by a thread locking feature to prevent the impeller from loosening during short periods of reverse rotation as might occur when rotation direction is being verified outside the installation.

Casting Materials:

The impeller, casing, bearing/seal housing and motor cover shall be of ASTM A48 Class 30 high quality cast iron for strength and long life.

Shaft and Seals:

Motor shall be protected by a mechanical shaft seal mounted on the pump shaft. The mechanical seal shall be constructed of silicon carbide vs. silicon carbide sealing faces. The mechanical seal shall be tensioned by a spring constructed of series 300 stainless steel metal components and BUNA-N elastomers.

Corrosion Protection:

The pump/motor shaft wet-end shall be series 400 SST. Both inner and outer surfaces of cast iron shall be electrocoat-painted with thermo-setting Acrylic Enamel baked at 400º F, after castings are completely machined.

PART 3 EXECUTION

3.1 INSTALLATION

Contractor shall install the materials and equipment specified herein in accordance with the Manufacturer's recommendations and as shown on the drawings.

Mount discharge elbow to the floor of the wet well floor with stainless steel bolts.

Connect piping without imposing strains to flanges, if applicable.

No portion of the pump shall bear directly on the floor of the sump wet well.

PART 4 MEASUREMENT AND PAYMENT

4.1 PAYMENT

Payment for all work, materials, labor, equipment, tools and incidentals including electrical work and system testing necessary to provide a complete and operational duplex pump station identified as the Plant Drain Pump Station shall be included in the Lump Sum Bid Item: “WWTF Improvement”.

Payment for all work, materials, labor, equipment, tools and incidentals including electrical work, pumping and cleaning the existing tanks and system testing necessary to provide a complete and operational duplex pump station at the Wellness Center shall be included in the Lump Sum Bid Item: “Wellness Center Pump Station”.

*** END OF SECTION ***

PART 7

LABOR REQUIREMENTS

WA State Prevailing Wage Rates
Federal Prevailing Wage Rates

WA State Prevailing Wage Rates

****

Overtime Codes

Overtime calculations are based on the hourly rate actually paid to the worker. On public works projects, the hourly rate must be not less than the prevailing rate of wage minus the hourly rate of the cost of fringe benefits actually provided for the worker.

1. ALL HOURS WORKED IN EXCESS OF EIGHT (8) HOURS PER DAY OR FORTY (40) HOURS PER WEEK SHALL BE PAID AT ONE AND ONE-HALF TIMES THE HOURLY RATE OF WAGE.

B. All hours worked on Saturdays shall be paid at one and one-half times the hourly rate of wage. All hours worked on Sundays and holidays shall be paid at double the hourly rate of wage.

C. The first two (2) hours after eight (8) regular hours Monday through Friday and the first ten (10) hours on Saturday shall be paid at one and one-half times the hourly rate of wage. All other overtime hours and all hours worked on Sundays and holidays shall be paid at double the hourly rate of wage.

D. The first two (2) hours before or after a five-eight (8) hour workweek day or a four-ten (10) hour workweek day and the first eight (8) hours worked the next day after either workweek shall be paid at one and one-half times the hourly rate of wage. All additional hours worked and all worked on Sundays and holidays shall be paid at double the hourly rate of wage.

E. The first two (2) hours after eight (8) regular hours Monday through Friday and the first eight (8) hours on Saturday shall be paid at one and one-half times the hourly rate of wage. All other hours worked Monday through Saturday, and all hours worked on Sundays and holidays shall be paid at double the hourly rate of wage.

F. The first two (2) hours after eight (8) regular hours Monday through Friday and the first ten (10) hours on Saturday shall be paid at one and one-half times the hourly rate of wage. All other overtime hours worked, except Labor Day, shall be paid at double the hourly rate of wage. All hours worked on Labor Day shall be paid at three times the hourly rate of wage.

G. The first ten (10) hours worked on Saturdays and the first ten (10) hours worked on a fifth calendar weekday in a four-ten hour schedule, shall be paid at one and one-half times the hourly rate of wage. All hours worked in excess of ten (10) hours per day Monday through Saturday and all hours worked on Sundays and holidays shall be paid at double the hourly rate of wage.

H. All hours worked on Saturdays (except makeup days if work is lost due to inclement weather conditions or equipment breakdown) shall be paid at one and one-half times the hourly rate of wage. All hours worked Monday through Saturday over twelve (12) hours and all hours worked on Sundays and holidays shall be paid at double the hourly rate of wage.

I. All hours worked on Sundays and holidays shall also be paid at double the hourly rate of wage.

J. The first two (2) hours after eight (8) regular hours Monday through Friday and the first ten (10) hours on Saturday shall be paid at one and one-half times the hourly rate of wage. All hours worked over ten (10) hours Monday through Saturday, Sundays and holidays shall be paid at double the hourly rate of wage.

K. All hours worked on Saturdays and Sundays shall be paid at one and one-half times the hourly rate of wage. All hours worked on holidays shall be paid at double the hourly rate of wage.

M. All hours worked on Saturdays (except makeup days if work is lost due to inclement weather conditions) shall be paid at one and one-half times the hourly rate of wage. All hours worked on Sundays and holidays shall be paid at double the hourly rate of wage.

N. All hours worked on Saturdays (except makeup days) shall be paid at one and one-half times the hourly rate of wage. All hours worked on Sundays and holidays shall be paid at double the hourly rate of wage.

Overtime Codes Continued

1. O. The first ten (10) hours worked on Saturday shall be paid at one and one-half times the hourly rate of wage. All hours worked on Sundays, holidays and after twelve (12) hours, Monday through Friday and after ten (10) hours on Saturday shall be paid at double the hourly rate of wage.

P. All hours worked on Saturdays (except makeup days if circumstances warrant) and Sundays shall be paid at one and one-half times the hourly rate of wage. All hours worked on holidays shall be paid at double the hourly rate of wage.

Q. The first two (2) hours after eight (8) regular hours Monday through Friday and up to ten (10) hours worked on Saturdays shall be paid at one and one-half times the hourly rate of wage. All hours worked in excess of ten (10) hours per day Monday through Saturday and all hours worked on Sundays and holidays (except Christmas day) shall be paid at double the hourly rate of wage. All hours worked on Christmas day shall be paid at two and one-half times the hourly rate of wage.

R. All hours worked on Sundays and holidays shall be paid at two times the hourly rate of wage.

U. All hours worked on Saturdays shall be paid at one and one-half times the hourly rate of wage. All hours worked on Sundays and holidays (except Labor Day) shall be paid at two times the hourly rate of wage. All hours worked on Labor Day shall be paid at three times the hourly rate of wage.

V. All hours worked on Sundays and holidays (except Thanksgiving Day and Christmas day) shall be paid at one and one-half times the hourly rate of wage. All hours worked on Thanksgiving Day and Christmas day shall be paid at double the hourly rate of wage.

W. All hours worked on Saturdays and Sundays (except make-up days due to conditions beyond the control of the employer)) shall be paid at one and one-half times the hourly rate of wage. All hours worked on holidays shall be paid at double the hourly rate of wage.

X. The first four (4) hours after eight (8) regular hours Monday through Friday and the first twelve (12) hours on Saturday shall be paid at one and one-half times the hourly rate of wage. All hours worked over twelve (12) hours Monday through Saturday, Sundays and holidays shall be paid at double the hourly rate of wage. When holiday falls on Saturday or Sunday, the day before Saturday, Friday, and the day after Sunday, Monday, shall be considered the holiday and all work performed shall be paid at double the hourly rate of wage.

Y. All hours worked outside the hours of 5:00 am and 5:00 pm (or such other hours as may be agreed upon by any employer and the employee) and all hours worked in excess of eight (8) hours per day (10 hours per day for a 4 x 10 workweek) and on Saturdays and holidays (except labor day) shall be paid at one and one-half times the hourly rate of wage. (except for employees who are absent from work without prior approval on a scheduled workday during the workweek shall be paid at the straight-time rate until they have worked 8 hours in a day (10 in a 4 x 10 workweek) or 40 hours during that workweek.) All hours worked Monday through Saturday over twelve (12) hours and all hours worked on Sundays and Labor Day shall be paid at double the hourly rate of wage.

Z. All hours worked on Saturdays and Sundays shall be paid at one and one-half times the hourly rate of wage. All hours worked on holidays shall be paid the straight time rate of pay in addition to holiday pay.

Overtime Codes Continued

2. ALL HOURS WORKED IN EXCESS OF EIGHT (8) HOURS PER DAY OR FORTY (40) HOURS PER WEEK SHALL BE PAID AT ONE AND ONE-HALF TIMES THE HOURLY RATE OF WAGE.

   B. All hours worked on holidays shall be paid at one and one-half times the hourly rate of wage.

   F. The first eight (8) hours worked on holidays shall be paid at the straight hourly rate of wage in addition to the holiday pay. All hours worked in excess of eight (8) hours on holidays shall be paid at double the hourly rate of wage.

   M. This code appears to be missing. All hours worked on Saturdays, Sundays and holidays shall be paid at double the hourly rate of wage.

   O. All hours worked on Sundays and holidays shall be paid at one and one-half times the hourly rate of wage.

   R. All hours worked on Sundays and holidays and all hours worked over sixty (60) in one week shall be paid at double the hourly rate of wage.

   U. All hours worked on Saturdays shall be paid at one and one-half times the hourly rate of wage. All hours worked over 12 hours in a day or on Sundays and holidays shall be paid at double the hourly rate of wage.

3. ALL HOURS WORKED IN EXCESS OF EIGHT (8) HOURS PER DAY OR FORTY (40) HOURS PER WEEK SHALL BE PAID AT ONE AND ONE-HALF TIMES THE HOURLY RATE OF WAGE.

   F. All hours worked on Saturday shall be paid at one and one-half times the hourly rate of wage. All hours worked on Sunday shall be paid at two times the hourly rate of wage. All hours worked on paid holidays shall be paid at two and one-half times the hourly rate of wage including holiday pay.

   H. All work performed on Sundays between March 16th and October 14th and all Holidays shall be compensated for at two (2) times the regular rate of pay. Work performed on Sundays between October 15th and March 15th shall be compensated at one and one half (1-1/2) times the regular rate of pay.

   J. All hours worked between the hours of 10:00 pm and 5:00 am, Monday through Friday, and all hours worked on Saturdays shall be paid at a one and one-half times the hourly rate of wage. All hours worked on Sundays and holidays shall be paid at double the hourly rate of wage.

   K. Work performed in excess of eight (8) hours of straight time per day, or ten (10) hours of straight time per day when four ten (10) hour shifts are established, or forty (40) hours of straight time per week, Monday through Friday, or outside the normal 5 am to 6pm shift, and all work on Saturdays shall be paid at one and one-half times the hourly rate of wage. All work performed after 6:00 pm Saturday to 5:00 am Monday and Holidays, and all hours worked in excess of twelve (12) hours in a single shift shall be paid at double the hourly rate of wage.

   After an employee has worked eight (8) hours at an applicable overtime rate, all additional hours shall be at the applicable overtime rate until such time as the employee has had a break of eight (8) hours or more. When an employee returns to work without at least eight (8) hours time off since their previous shift, all such time shall be a continuation of shift and paid at the applicable overtime rate until he/she shall have the eight (8) hours rest period.

4. ALL HOURS WORKED IN EXCESS OF EIGHT (8) HOURS PER DAY OR FORTY (40) HOURS PER WEEK SHALL BE PAID AT ONE AND ONE-HALF TIMES THE HOURLY RATE OF WAGE.

   A. All hours worked in excess of eight (8) hours per day or forty (40) hours per week shall be paid at double the hourly rate of wage. All hours worked on Saturdays, Sundays and holidays shall be paid at double the hourly rate of wage.

Overtime Codes Continued

4. C. On Monday through Friday, the first four (4) hours of overtime after eight (8) hours of straight time work shall be paid at one and one half (1-1/2) times the straight time rate of pay, unless a four (4) day ten (10) hour workweek has been established. On a four (4) day ten (10) hour workweek scheduled Monday through Thursday, or Tuesday through Friday, the first two (2) hours of overtime after ten (10) hours of straight time work shall be paid at one and one half (1-1/2) times the straight time rate of pay. On Saturday, the first twelve (12) hours of work shall be paid at one and one half (1-1/2) times the straight time rate of pay, except that if the job is down on Monday through Friday due to weather conditions or other conditions outside the control of the employer, the first ten (10) hours on Saturday may be worked at the straight time rate of pay. All hours worked over twelve (12) hours in a day and all hours worked on Sunday and Holidays shall be paid at two (2) times the straight time rate of pay.

D. All hours worked in excess of eight (8) hours per day or forty (40) hours per week shall be paid at double the hourly rate of wage. All hours worked on Saturday, Sundays and holidays shall be paid at double the hourly rate of pay. Rates include all members of the assigned crew.

EXCEPTION:
On all multipole structures and steel transmission lines, switching stations, regulating, capacitor stations, generating plants, industrial plants, associated installations and substations, except those substations whose primary function is to feed a distribution system, will be paid overtime under the following rates:

The first two (2) hours after eight (8) regular hours Monday through Friday of overtime on a regular workday, shall be paid at one and one-half times the hourly rate of wage. All hours in excess of ten (10) hours will be at two (2) times the hourly rate of wage. The first eight (8) hours worked on Saturday will be paid at one and one-half (1-1/2) times the hourly rate of wage. All hours worked in excess of eight (8) hours on Saturday, and all hours worked on Sundays and holidays will be at the double the hourly rate of wage.

All overtime eligible hours performed on the above described work that is energized, shall be paid at the double the hourly rate of wage.

E. The first two (2) hours after eight (8) regular hours Monday through Friday and the first eight (8) hours on Saturday shall be paid at one and one-half times the hourly rate of wage. All other hours worked Monday through Saturday, and all hours worked on Sundays and holidays shall be paid at double the hourly rate of wage.

On a four-day, ten-hour weekly schedule, either Monday thru Thursday or Tuesday thru Friday schedule, all hours worked after ten shall be paid at double the hourly rate of wage. The Monday or Friday not utilized in the normal four-day, ten hour work week, and Saturday shall be paid at one and one half (1½) times the regular shift rate for the first eight (8) hours. All other hours worked Monday through Saturday, and all hours worked on Sundays and holidays shall be paid at double the hourly rate of wage.

G. All hours worked on Saturdays shall be paid at one and one-half times the hourly rate of wage. All hours worked Monday through Saturday over twelve (12) hours and all hours worked on Sundays and holidays shall be paid at double the hourly rate of wage.

H. The first two (2) hours after eight (8) regular hours Monday through Friday and the first eight (8) hours on Saturday shall be paid at one and one-half times the hourly rate of wage. All other overtime hours worked, except Labor Day, and all hours on Sunday shall be paid at double the hourly rate of wage. All hours worked on Labor Day shall be paid at three times the hourly rate of wage.

I. The First eight (8) hours worked on Saturdays shall be paid at one and one-half times the hourly rate of wage. All hours worked in excess of eight (8) per day on Saturdays shall be paid at double the hourly rate of wage. All hours worked on Sundays and holidays shall be paid at double the hourly rate of wage.

Overtime Codes Continued

4. J. The first eight (8) hours worked on a Saturday shall be paid at one and one-half times the hourly rate of wage. All hours worked in excess of eight (8) hours on a Saturday shall be paid at double the hourly rate of wage. All hours worked over twelve (12) in a day, and all hours worked on Sundays and Holidays shall be paid at double the hourly rate of wage.

K. All hours worked on a Saturday shall be paid at one and one-half times the hourly rate of wage, so long as Saturday is the sixth consecutive day worked. All hours worked over twelve (12) in a day Monday through Saturday, and all hours worked on Sundays and Holidays shall be paid at double the hourly rate of wage.

L. The first twelve (12) hours worked on a Saturday shall be paid at one and one-half times the hourly rate of wage. All hours worked on a Saturday in excess of twelve (12) hours shall be paid at double the hourly rate of pay. All hours worked over twelve (12) in a day Monday through Friday, and all hours worked on Sundays shall be paid at double the hourly rate of wage. All hours worked on a holiday shall be paid at one and one-half times the hourly rate of wage, except that all hours worked on Labor Day shall be paid at double the hourly rate of pay.

U. The first four (4) hours after eight (8) regular hours Monday through Friday and the first twelve (12) hours on Saturday shall be paid at one and one-half times the hourly rate of wage. (Except on makeup days if work is lost due to inclement weather, then the first eight (8) hours on Saturday may be paid the regular rate.) All hours worked over twelve (12) hours Monday through Saturday, and all hours worked on Sundays and holidays shall be paid at double the hourly rate of wage.

V. Work performed in excess of ten (10) hours of straight time per day when four ten (10) hour shifts are established or outside the normal shift (5 am to 6pm), and all work on Saturdays, except for make-up days shall be paid at time and one-half (1 ½) the straight time rate.

In the event the job is down due to weather conditions, then Saturday may, be worked as a voluntary make-up day at the straight time rate. However, Saturday shall not be utilized as a make-up day when a holiday falls on Friday. All work performed on Sundays and holidays and work in excess of twelve (12) hours per day shall be paid at double (2x) the straight time rate of pay.

After an employee has worked eight (8) hours at an applicable overtime rate, all additional hours shall be at the applicable overtime rate until such time as the employee has had a break of eight (8) hours.

When an employee returns to work without a break of eight (8) hours since their previous shift, all such time shall be a continuation of shift and paid at the applicable overtime rate until such time as the employee has had a break of eight (8) hours.

W. All hours worked on Saturdays (except makeup days if work is lost due to inclement weather conditions) shall be paid at one and one-half times the hourly rate of wage. All hours worked on Sundays and holidays shall be paid at double the hourly rate of wage.

When an employee returns to work without at least eight (8) hours time off since their previous shift, all such time shall be a continuation of shift and paid at the applicable overtime rate until such time as the employee has had a break of eight (8) hours.

Overtime Codes Continued

4. X. All hours worked on Saturdays shall be paid at one and one-half times the hourly rate of wage. All hours worked on Sundays and holidays shall be paid at double the hourly rate of wage. Work performed outside the normal shift of 6 am to 6pm shall be paid at one and one-half the straight time rate, (except for special shifts or three shift operations). All work performed on Sundays and holidays shall be paid at double the hourly rate of wage. Shifts may be established when considered necessary by the Employer.

The Employer may establish shifts consisting of eight (8) or ten (10) hours of work (subject to WAC 296-127-022), that shall constitute a normal forty (40) hour work week. The Employer can change from a 5-eight to a 4-ten hour schedule or back to the other. All hours of work on these shifts shall be paid for at the straight time hourly rate. Work performed in excess of eight hours (or ten hours per day (subject to WAC 296-127-022) shall be paid at one and one-half the straight time rate.

When due to conditions beyond the control of the Employer, or when contract specifications require that work can only be performed outside the regular day shift, then by mutual agreement a special shift may be worked at the straight time rate, eight (8) hours work for eight (8) hours pay. The starting time shall be arranged to fit such conditions of work.

When an employee returns to work without at a break of eight (8) hours since their previous shift, all such time shall be a continuation of shift and paid at the applicable overtime rate until such time as the employee has had a break of eight (8) hours.

Y. Work performed in excess of eight (8) hours of straight time per day, or ten (10) hours of straight time per day when four ten (10) hour shifts are established, or forty (40) hours of straight time per week, Monday through Friday, or outside the normal shift, and all work on Saturdays shall be paid at time and one-half the straight time rate. All work performed after 6:00 pm Saturday to 6:00 am Monday and holidays shall be paid at double the straight time rate of pay.

Any shift starting between the hours of 6:00 pm and midnight shall receive an additional one dollar ($1.00) per hour for all hours worked that shift.

After an employee has worked eight (8) hours at an applicable overtime rate, all additional hours shall be at the applicable overtime rate until such time as the employee has had a break of eight (8) hours or more.

Z. All hours worked between the hours of 6:00 pm and 6:00 am, Monday through Saturday, shall be paid at a premium rate of 20% over the hourly rate of wage. Work performed on Sundays may be paid at double time. All hours worked on holidays shall be paid at double the hourly rate of wage.

11. ALL HOURS WORKED IN EXCESS OF EIGHT (8) HOURS PER DAY OR FORTY (40) HOURS PER WEEK SHALL BE PAID AT ONE AND ONE-HALF TIMES THE HOURLY RATE OF WAGE.

A. The first ten (10) hours worked on Saturday and all hours worked on holidays shall be paid at one and one-half times the hourly rate of wage. All hours worked over twelve (12) hours Monday through Saturday, and all hours worked on Sundays shall be paid at double the hourly rate of wage.

After an employee has worked eight (8) hours, all additional hours worked shall be paid at the applicable overtime rate until such time as the employee has had a break of eight (8) hours or more.

Holiday Codes

5. A. Holidays: New Year's Day, Memorial Day, Independence Day, Labor Day, Thanksgiving Day, Friday after Thanksgiving Day, and Christmas Day (7).

B. Holidays: New Year's Day, Memorial Day, Independence Day, Labor Day, Thanksgiving Day, Friday after Thanksgiving Day, the day before Christmas, and Christmas Day (8).

C. Holidays: New Year's Day, Presidents' Day, Memorial Day, Independence Day, Labor Day, Thanksgiving Day, the Friday after Thanksgiving Day, And Christmas Day (8).

D. Holidays: New Year's Day, Memorial Day, Independence Day, Labor Day, Thanksgiving Day, the Friday and Saturday after Thanksgiving Day, And Christmas Day (8).

H. Holidays: New Year's Day, Memorial Day, Independence Day, Thanksgiving Day, the Day after Thanksgiving Day, And Christmas (6).

I. Holidays: New Year's Day, Memorial Day, Independence Day, Labor Day, Thanksgiving Day, and Christmas Day (6).

J. Holidays: New Year's Day, Memorial Day, Independence Day, Thanksgiving Day, Friday after Thanksgiving Day, Christmas Eve Day, And Christmas Day (7).

K. Holidays: New Year's Day, Presidents' Day, Memorial Day, Independence Day, Labor Day, Thanksgiving Day, Friday After Thanksgiving Day, The Day Before Christmas, And Christmas Day (9).

L. Holidays: New Year's Day, Martin Luther King Jr. Day, Memorial Day, Independence Day, Labor Day, Thanksgiving Day, Friday after Thanksgiving Day, And Christmas Day (8).

N. Holidays: New Year's Day, Presidents' Day, Memorial Day, Independence Day, Labor Day, Veterans' Day, Thanksgiving Day, The Friday After Thanksgiving Day, And Christmas Day (9).

P. Holidays: New Year's Day, Memorial Day, Independence Day, Labor Day, Thanksgiving Day, Friday And Saturday After Thanksgiving Day, The Day Before Christmas, And Christmas Day (9). If A Holiday Falls On Sunday, The Following Monday Shall Be Considered As A Holiday.

Q. Paid Holidays: New Year's Day, Memorial Day, Independence Day, Labor Day, Thanksgiving Day, and Christmas Day (6).

R. Paid Holidays: New Year's Day, Memorial Day, Independence Day, Labor Day, Thanksgiving Day, Day After Thanksgiving Day, One-Half Day Before Christmas Day, And Christmas Day. (7 1/2).

S. Paid Holidays: New Year's Day, Presidents' Day, Memorial Day, Independence Day, Labor Day, Thanksgiving Day, And Christmas Day (7).

Z. Holidays: New Year's Day, Memorial Day, Independence Day, Labor Day, Veterans Day, Thanksgiving Day, the Friday after Thanksgiving Day, And Christmas Day (8).

6. G. Paid Holidays: New Year's Day, Martin Luther King Jr. Day, Presidents' Day, Memorial Day, Independence Day, Labor Day, Veterans' Day, Thanksgiving Day, the Friday after Thanksgiving Day, Christmas Day, and Christmas Eve Day (11).

H. Paid Holidays: New Year's Day, New Year's Eve Day, Memorial Day, Independence Day, Labor Day, Thanksgiving Day, Friday After Thanksgiving Day, Christmas Day, The Day After Christmas, And A Floating Holiday (10).

Holiday Codes Continued

T. Paid Holidays: New Year's Day, Presidents' Day, Memorial Day, Independence Day, Labor Day, Thanksgiving Day, The Friday After Thanksgiving Day, The Last Working Day Before Christmas Day, And Christmas Day (9).

Z. Holidays: New Year's Day, Memorial Day, Independence Day, Labor Day, Thanksgiving Day, Friday after Thanksgiving Day, And Christmas Day (7). If a holiday falls on Saturday, the preceding Friday shall be considered as the holiday. If a holiday falls on Sunday, the following Monday shall be considered as the holiday.

7. A. Holidays: New Year's Day, Memorial Day, Independence Day, Labor Day, Thanksgiving Day, the Friday and Saturday after Thanksgiving Day, And Christmas Day (8). Any Holiday Which Falls On A Sunday Shall Be Observed As A Holiday On The Following Monday. If any of the listed holidays falls on a Saturday, the preceding Friday shall be a regular work day.

B. Holidays: New Year's Day, Memorial Day, Independence Day, Labor Day, Thanksgiving Day, the Friday and Saturday after Thanksgiving Day, And Christmas Day (8). Any holiday which falls on a Sunday shall be observed as a holiday on the following Monday. Any holiday which falls on a Saturday shall be observed as a holiday on the preceding Friday.

C. Holidays: New Year's Day, Martin Luther King Jr. Day, Memorial Day, Independence Day, Labor Day, Thanksgiving Day, the Friday after Thanksgiving Day, And Christmas Day (8). Any holiday which falls on a Sunday shall be observed as a holiday on the following Monday. Any holiday which falls on a Saturday shall be observed as a holiday on the preceding Friday.

D. Paid Holidays: New Year's Day, Memorial Day, Independence Day, Labor Day, Veteran's Day, Thanksgiving Day, the Friday after Thanksgiving Day, And Christmas Day (8). Unpaid Holidays: President's Day. Any paid holiday which falls on a Sunday shall be observed as a holiday on the following Monday. Any paid holiday which falls on a Saturday shall be observed as a holiday on the preceding Friday.

E. Holidays: New Year's Day, Memorial Day, Independence Day, Labor Day, Thanksgiving Day, the Friday after Thanksgiving Day, And Christmas Day (7). Any holiday which falls on a Sunday shall be observed as a holiday on the following Monday. Any holiday which falls on a Saturday shall be observed as a holiday on the preceding Friday.

F. Holidays: New Year's Day, Memorial Day, Independence Day, Labor Day, Thanksgiving Day, the Friday after Thanksgiving Day, the last working day before Christmas day and Christmas day (8). Any holiday which falls on a Sunday shall be observed as a holiday on the following Monday. Any holiday which falls on a Saturday shall be observed as a holiday on the preceding Friday.

G. Holidays: New Year's Day, Memorial Day, Independence Day, Labor Day, Thanksgiving Day, and Christmas Day (6). Any holiday which falls on a Sunday shall be observed as a holiday on the following Monday.

H. Holidays: New Year's Day, Martin Luther King Jr. Day, Independence Day, Memorial Day, Labor Day, Thanksgiving Day, the Friday after Thanksgiving Day, the Last Working Day before Christmas Day and Christmas Day (9). Any holiday which falls on a Sunday shall be observed as a holiday on the following Monday. Any holiday which falls on a Saturday shall be observed as a holiday on the preceding Friday.

I. Holidays: New Year's Day, President's Day, Independence Day, Memorial Day, Labor Day, Thanksgiving Day, The Friday After Thanksgiving Day, The Day Before Christmas Day And Christmas Day (9). Any holiday which falls on a Sunday shall be observed as a holiday on the following Monday. Any holiday which falls on a Saturday shall be observed as a holiday on the preceding Friday.

Holiday Codes Continued

7. J. Holidays: New Year's Day, Independence Day, Memorial Day, Labor Day, Thanksgiving Day and Christmas Day (6). Any holiday which falls on a Sunday shall be observed as a holiday on the following Monday. Any holiday which falls on a Saturday shall be observed as a holiday on the preceding Friday.

K. Holidays: New Year's Day, Memorial Day, Independence Day, Thanksgiving Day, the Friday and Saturday after Thanksgiving Day, And Christmas Day (8). Any holiday which falls on a Sunday shall be observed as a holiday on the following Monday. Any holiday which falls on a Saturday shall be observed as a holiday on the preceding Friday.

L. Holidays: New Year's Day, Memorial Day, Labor Day, Independence Day, Thanksgiving Day, the Last Work Day before Christmas Day, And Christmas Day (7). Any holiday which falls on a Sunday shall be observed as a holiday on the following Monday. Any holiday which falls on a Saturday shall be observed as a holiday on the preceding Friday.

N. Holidays: New Year's Day, Memorial Day, Independence Day, Labor Day, Thanksgiving Day, the Friday after Thanksgiving Day, And Christmas Day (7). Any holiday which falls on a Sunday shall be observed as a holiday on the following Monday. When Christmas falls on a Saturday, the preceding Friday shall be observed as a holiday.

P. Holidays: New Year's Day, Memorial Day, Independence Day, Labor Day, Thanksgiving Day, Friday after Thanksgiving Day, And Christmas Day (7). Any holiday which falls on a Sunday shall be observed as a holiday on the following Monday.

Q. Holidays: New Year's Day, Memorial Day, Independence Day, Labor Day, Thanksgiving Day, the Friday after Thanksgiving Day, the Last Working Day before Christmas Day and Christmas Day (8). Any holiday which falls on a Sunday shall be observed as a holiday on the following Monday. If any of the listed holidays falls on a Saturday, the preceding Friday shall be a regular work day.

S. Paid Holidays: New Year's Day, Memorial Day, Independence Day, Labor Day, Thanksgiving Day, Friday after Thanksgiving Day, Christmas Day, the Day after Christmas, and A Floating Holiday (9). If any of the listed holidays falls on a Sunday, the day observed by the Nation shall be considered a holiday and compensated accordingly.

V. Holidays: New Year's Day, President’s Birthday, Memorial Day, Independence Day, Labor Day, Thanksgiving Day, the Friday after Thanksgiving Day, Christmas Day, the day before or after Christmas, and the day before or after New Year’s Day. If any of the above listed holidays falls on a Sunday, the day observed by the Nation shall be considered a holiday and compensated accordingly.

W. Holidays: New Year's Day, Day After New Year’s, Memorial Day, Independence Day, Labor Day, Thanksgiving Day, the Friday after Thanksgiving Day, Christmas Eve Day, Christmas Day, the day after Christmas, the day before New Year’s Day, and a Floating Holiday.

X. Holidays: New Year's Day, Day before or after New Year’s Day, Presidents’ Day, Memorial Day, Independence Day, Labor Day, Thanksgiving Day, the Friday after Thanksgiving Day, Christmas Day, and the day before or after Christmas day. If a holiday falls on a Saturday or on a Friday that is the normal day off, then the holiday will be taken on the last normal workday. If the holiday falls on a Monday that is the normal day off or on a Sunday, then the holiday will be taken on the next normal workday.

Y. Holidays: New Year's Day, Presidents’ Day, Memorial Day, Independence Day, Labor Day, Thanksgiving Day, the Friday after Thanksgiving Day, and Christmas Day. (8) If the holiday falls on a Sunday, then the day observed by the federal government shall be considered a holiday and compensated accordingly.

Holiday Codes Continued

7. G. New Year's Day, Washington's Birthday, Memorial Day, Independence Day, Labor Day, Thanksgiving Day, The Friday After Thanksgiving Day, the last scheduled workday before Christmas, and Christmas Day (9). If any of the listed holidays falls on a Sunday, the day observed by the Nation shall be considered a holiday and compensated accordingly.

H. Holidays: New Year's Day, Martin Luther King Jr. Day, Independence Day, Memorial Day, Labor Day, Thanksgiving Day, the Friday after Thanksgiving Day, the Last Working Day before Christmas Day and Christmas Day (9). Any holiday which falls on a Sunday shall be observed as a holiday on the following Monday. Any holiday which falls on a Saturday shall be observed as a holiday on the preceding Friday.

I. Holidays: New Year's Day, President's Day, Independence Day, Memorial Day, Labor Day, Thanksgiving Day, The Friday After Thanksgiving Day, The Day Before Christmas Day And Christmas Day (9). Any holiday which falls on a Sunday shall be observed as a holiday on the following Monday. Any holiday which falls on a Saturday shall be observed as a holiday on the preceding Friday.

J. Holidays: New Year's Day, Independence Day, Memorial Day, Labor Day, Thanksgiving Day and Christmas Day (6). Any holiday which falls on a Sunday shall be observed as a holiday on the following Monday. Any holiday which falls on a Saturday shall be observed as a holiday on the preceding Friday.

K. Holidays: New Year's Day, Memorial Day, Independence Day, Thanksgiving Day, the Friday and Saturday after Thanksgiving Day, And Christmas Day (8). Any holiday which falls on a Sunday shall be observed as a holiday on the following Monday. Any holiday which falls on a Saturday shall be observed as a holiday on the preceding Friday.

L. Holidays: New Year's Day, Memorial Day, Labor Day, Independence Day, Thanksgiving Day, the Last Work Day before Christmas Day, And Christmas Day (7). Any holiday which falls on a Sunday shall be observed as a holiday on the following Monday. Any holiday which falls on a Saturday shall be observed as a holiday on the preceding Friday.

N. Holidays: New Year's Day, Memorial Day, Independence Day, Labor Day, Thanksgiving Day, the Friday after Thanksgiving Day, And Christmas Day (7). Any holiday which falls on a Sunday shall be observed as a holiday on the following Monday. When Christmas falls on a Saturday, the preceding Friday shall be observed as a holiday.

P. Holidays: New Year's Day, Memorial Day, Independence Day, Labor Day, Thanksgiving Day, Friday after Thanksgiving Day, And Christmas Day (7). Any holiday which falls on a Sunday shall be observed as a holiday on the following Monday.

Q. Holidays: New Year's Day, Memorial Day, Independence Day, Labor Day, Thanksgiving Day, the Friday after Thanksgiving Day, the Last Working Day before Christmas Day and Christmas Day (8). Any holiday which falls on a Sunday shall be observed as a holiday on the following Monday. If any of the listed holidays falls on a Saturday, the preceding Friday shall be a regular work day.

S. Paid Holidays: New Year's Day, Memorial Day, Independence Day, Labor Day, Thanksgiving Day, Friday after Thanksgiving Day, Christmas Day, the Day after Christmas, and A Floating Holiday (9). If any of the listed holidays falls on a Sunday, the day observed by the Nation shall be considered a holiday and compensated accordingly.

V. Holidays: New Year's Day, President's Birthday, Memorial Day, Independence Day, Labor Day, Thanksgiving Day, the Friday after Thanksgiving Day, Christmas Day, the day before or after Christmas, and the day before or after New Year's Day. If any of the above listed holidays falls on a Sunday, the day observed by the Nation shall be considered a holiday and compensated accordingly.

Holiday Codes Continued

7. W. Holidays: New Year's Day, Day After New Year's, Memorial Day, Independence Day, Labor Day, Thanksgiving Day, the Friday after Thanksgiving Day, Christmas Eve Day, Christmas Day, the day after Christmas, the day before New Year's Day, and a Floating Holiday.

X. Holidays: New Year's Day, Day before or after New Year's Day, Presidents' Day, Memorial Day, Independence Day, Labor Day, Thanksgiving Day, the Friday after Thanksgiving Day, Christmas Day, and the day before or after Christmas day. If a holiday falls on a Saturday or on a Friday that is the normal day off, then the holiday will be taken on the last normal workday. If the holiday falls on a Monday that is the normal day off or on a Sunday, then the holiday will be taken on the next normal workday.

Y. Holidays: New Year's Day, Presidents' Day, Memorial Day, Independence Day, Labor Day, Thanksgiving Day, the Friday after Thanksgiving Day, and Christmas Day. (8) If the holiday falls on a Sunday, then the day observed by the federal government shall be considered a holiday and compensated accordingly.

15. F. Holidays: New Year's Day, Memorial Day, Independence Day, Labor Day, Thanksgiving Day, Friday after Thanksgiving Day, the last scheduled workday before Christmas, and Christmas Day (8). If any of the listed holidays falls on a Sunday, the day observed by the Nation shall be considered a holiday and compensated accordingly.

G. New Year's Day, Washington's Birthday, Memorial Day, Independence Day, Labor Day, Thanksgiving Day, The Friday After Thanksgiving Day, the last scheduled workday before Christmas, and Christmas Day (9). If any of the listed holidays falls on a Sunday, the day observed by the Nation shall be considered a holiday and compensated accordingly.

Note Codes

8. D. Workers working with supplied air on hazmat projects receive an additional $1.00 per hour.

L. Workers on hazmat projects receive additional hourly premiums as follows -Level A: $0.75, Level B: $0.50, And Level C: $0.25.

M. Workers on hazmat projects receive additional hourly premiums as follows: Levels A & B: $1.00, Levels C & D: $0.50.

N. Workers on hazmat projects receive additional hourly premiums as follows -Level A: $1.00, Level B: $0.75, Level C: $0.50, And Level D: $0.25.

S. Effective August 31, 2012 – A Traffic Control Supervisor shall be present on the project whenever flagging or spotting or other traffic control labor is being utilized. Flaggers and Spotters shall be posted where shown on approved Traffic Control Plans or where directed by the Engineer. All flaggers and spotters shall possess a current flagging card issued by the State of Washington, Oregon, Montana, or Idaho. This classification is only effective on or after August 31, 2012.

Note Codes Continued

8. T. Effective August 31, 2012 – A Traffic Control Laborer performs the setup, maintenance and removal of all temporary traffic control devices and construction signs necessary to control vehicular, bicycle, and pedestrian traffic during construction operations. Flaggers and Spotters shall be posted where shown on approved Traffic Control Plans or where directed by the Engineer. All flaggers and spotters shall possess a current flagging card issued by the State of Washington, Oregon, Montana, or Idaho. This classification is only effective on or after August 31, 2012.

U. Workers on hazmat projects receive additional hourly premiums as follows – Class A Suit: $2.00, Class B Suit: $1.50, And Class C Suit: $1.00. Workers performing underground work receive an additional $0.40 per hour for any and all work performed underground, including operating, servicing and repairing of equipment. The premium for underground work shall be paid for the entire shift worked. Workers who work suspended by a rope or cable receive an additional $0.50 per hour. The premium for work suspended shall be paid for the entire shift worked. Workers who do “pioneer” work (break open a cut, build road, etc.) more than one hundred fifty (150) feet above grade elevation receive an additional $0.50 per hour.

V. In addition to the hourly wage and fringe benefits, the following depth and enclosure premiums shall be paid. The premiums are to be calculated for the maximum depth and distance into an enclosure that a diver reaches in a day. The premiums are to be paid one time for the day and are not used in calculating overtime pay.

Depth premiums apply to depths of fifty feet or more. Over 50' to 100' - $2.00 per foot for each foot over 50 feet. Over 101' to 150' - $3.00 per foot for each foot over 101 feet. Over 151' to 220' - $4.00 per foot for each foot over 220 feet. Over 221' - $5.00 per foot for each foot over 221 feet.

Enclosure premiums apply when divers enter enclosures (such as pipes or tunnels) where there is no vertical ascent and is measured by the distance travelled from the entrance. 25’ to 300’ - $1.00 per foot from entrance. 300’ to 600’ - $1.50 per foot beginning at 300’. Over 600’ - $2.00 per foot beginning at 600’.

W. Meter Installers work on single phase 120/240V self-contained residential meters. The Lineman/Groundmen rates would apply to meters not fitting this description.

X. Workers on hazmat projects receive additional hourly premiums as follows - Class A Suit: $2.00, Class B Suit: $1.50, Class C Suit: $1.00, and Class D Suit: $0.50. Special Shift Premium: Basic hourly rate plus $2.00 per hour.

When due to conditions beyond the control of the Employer or when an owner (not acting as the contractor), a government agency or the contract specifications requires that work can only be performed outside the normal 5 am to 6pm shift, then the special shift premium will be applied to the basic hourly rate. When an employee works on a special shift, they shall be paid a special shift premium for each hour worked unless they are in OT or Double-time status. (For example, the special shift premium does not waive the overtime requirements for work performed on Saturday or Sunday.)

Y. Tide Work: When employees are called out between the hours of 6:00 p.m. and 6:00 a.m. to work on tide work (work located in the tide plane) all time worked shall be at one and one-half times the hourly rate of pay.

Swinging Stage/Boatswains Chair: Employees working on a swinging state or boatswains chair or under conditions that require them to be tied off to allow their hands to be free shall receive seventy-five cents ($0.75) per hour above the classification rate.

Note Codes Continued

8. Z. Workers working with supplied air on hazmat projects receive an additional $1.00 per hour.

Special Shift Premium: Basic hourly rate plus $2.00 per hour. When due to conditions beyond the control of the Employer or when an owner (not acting as a contractor), a government agency or the contract specifications require that more than (4) hours of a special shift can only be performed outside the normal 6 am to 6pm shift, then the special shift premium will be applied to the basic straight time for the entire shift. When an employee works on a special shift, they will be paid a special shift premium for each hour worked unless they are in overtime or double-time status. (For example, the special shift premium does not waive the overtime requirements for work performed on Saturday or Sunday.)

9. A. Workers working with supplied air on hazmat projects receive an additional $1.00 per hour.

Special Shift Premium: Basic hourly rate plus $2.00 per hour. When due to conditions beyond the control of the Employer or when an owner (not acting as the contractor), a government agency or the contract specifications require that more than four (4) hours of a special shift can only be performed outside the normal 6 am to 6pm shift, then the special shift premium will be applied to the basic straight time for the entire shift. When an employee works on a special shift, they shall be paid a special shift premium for each hour worked unless they are in overtime or double-time status. (For example, the special shift premium does not waive the overtime requirements for work performed on Saturday or Sunday.)

Certified Crane Operator Premium: Crane operators requiring certifications shall be paid $0.50 per hour above their classification rate.

Boom Pay Premium: All cranes including tower shall be paid as follows based on boom length:

(A) – 130’ to 199’ – $0.50 per hour over their classification rate.
(B) – 200’ to 299’ – $0.80 per hour over their classification rate.
(C) – 300’ and over – $1.00 per hour over their classification rate.

B. The highest pressure registered on the gauge for an accumulated time of more than fifteen (15) minutes during the shift shall be used in determining the scale paid.

Tide Work: When employees are called out between the hours of 6:00 p.m. and 6:00 a.m. to work on tide work (work located in the tide plane) all time worked shall be at one and one-half times the hourly rate of pay. Swinging Stage/Boatswains Chair: Employees working on a swinging stage or boatswains chair or under conditions that require them to be tied off to allow their hands to be free shall receive seventy-five cents ($0.75) per hour above the classification rate.

C. Tide Work: When employees are called out between the hours of 6:00 p.m. and 6:00 a.m. to work on tide work (work located in the tide plane) all time worked shall be at one and one-half times the hourly rate of pay. Swinging Stage/Boatswains Chair: Employees working on a swinging stage or boatswains chair or under conditions that require them to be tied off to allow their hands to be free shall receive seventy-five cents ($0.75) per hour above the classification rate.

Effective August 31, 2012 – A Traffic Control Supervisor shall be present on the project whenever flagging or spotting or other traffic control labor is being utilized. A Traffic Control Laborer performs the setup, maintenance and removal of all temporary traffic control devices and construction signs necessary to control vehicular, bicycle, and pedestrian traffic during construction operations. Flaggers and Spotters shall be posted where shown on approved Traffic Control Plans or where directed by the Engineer. All flaggers and spotters shall possess a current flagging card issued by the State of Washington, Oregon, Montana, or Idaho. These classifications are only effective on or after August 31, 2012.

Note Codes Continued

9. D. Industrial Painter wages are required for painting within industrial facilities such as treatment plants, pipelines, towers, dams, bridges, power generation facilities and manufacturing facilities such as chemical plants, etc., or anywhere abrasive blasting is necessary to prepare surfaces, or hazardous materials encapsulation is required.

E. Heavy Construction includes construction, repair, alteration or additions to the production, fabrication or manufacturing portions of industrial or manufacturing plants, hydroelectric or nuclear power plants and atomic reactor construction. Workers on hazmat projects receive additional hourly premiums as follows -Level A: $1.00, Level B: $0.75, Level C: $0.50, And Level D: $0.25.

F. Industrial Painter wages are required for painting within industrial facilities such as treatment plants, pipelines, towers, dams, power generation facilities and manufacturing facilities such as chemical plants, etc., or anywhere abrasive blasting is necessary to prepare surfaces, or hazardous materials encapsulation is required.

Washington State Department of Labor and Industries
Policy Statement
(Regarding the Production of "Standard" or "Non-standard" Items)

Below is the department's (State L&I's) list of criteria to be used in determining whether a prefabricated item is "standard" or "non-standard". For items not appearing on WSDOT's predetermined list, these criteria shall be used by the Contractor (and the Contractor's subcontractors, agents to subcontractors, suppliers, manufacturers, and fabricators) to determine coverage under RCW 39.12. The production, in the State of Washington, of non-standard items is covered by RCW 39.12, and the production of standard items is not. The production of any item outside the State of Washington is not covered by RCW 39.12.

1. Is the item fabricated for a public works project? If not, it is not subject to RCW 39.12. If it is, go to question 2.

2. Is the item fabricated on the public works jobsite? If it is, the work is covered under RCW 39.12. If not, go to question 3.

3. Is the item fabricated in an assembly/fabrication plant set up for, and dedicated primarily to, the public works project? If it is, the work is covered by RCW 39.12. If not, go to question 4.

4. Does the item require any assembly, cutting, modification or other fabrication by the supplier? If not, the work is not covered by RCW 39.12. If yes, go to question 5.

5. Is the prefabricated item intended for the public works project typically an inventory item which could reasonably be sold on the general market? If not, the work is covered by RCW 39.12. If yes, go to question 6.

6. Does the specific prefabricated item, generally defined as standard, have any unusual characteristics such as shape, type of material, strength requirements, finish, etc? If yes, the work is covered under RCW 39.12.

Any firm with questions regarding the policy, WSDOT's Predetermined List, or for determinations of covered and non-covered workers shall be directed to State L&I at (360) 902-5330.

WSDOT's
Predetermined List for
Suppliers - Manufactures - Fabricator

Below is a list of potentially prefabricated items, originally furnished by WSDOT to Washington State Department of Labor and Industries, that may be considered non-standard and therefore covered by the prevailing wage law, RCW 39.12. Items marked with an X in the "YES" column should be considered to be non-standard and therefore covered by RCW 39.12. Items marked with an X in the "NO" column should be considered to be standard and therefore not covered. Of course, exceptions to this general list may occur, and in that case shall be evaluated according to the criteria described in State and L&I's policy statement.

	ITEM DESCRIPTION	YES	NO
1.	Metal rectangular frames, solid metal covers, herringbone grates, and bi-directional vaned grates for Catch Basin Types 1, 1L, 1P, and 2 and Concrete Inlets. See Std. Plans		X
2.	Metal circular frames (rings) and covers, circular grates, and prefabricated ladders for Manhole Types 1, 2, and 3, Drywell Types 1, 2, and 3 and Catch Basin Type 2. See Std. Plans		X
3.	Prefabricated steel grate supports and welded grates, metal frames and dual vaned grates, and Type 1, 2, and 3 structural tubing grates for Drop Inlets. See Std. Plans.		X
4.	Concrete Pipe - Plain Concrete pipe and reinforced concrete pipe Class 2 to 5 sizes smaller than 60 inch diameter.		X
5.	Concrete Pipe - Plain Concrete pipe and reinforced concrete pipe Class 2 to 5 sizes larger than 60 inch diameter.		X
6.	Corrugated Steel Pipe - Steel lock seam corrugated pipe for culverts and storm sewers, sizes 30 inch to 120 inches in diameter. May also be treated, 1 thru 5.		X
7.	Corrugated Aluminum Pipe - Aluminum lock seam corrugated pipe for culverts and storm sewers, sizes 30 inch to 120 inches in diameter. May also be treated, #5.		X

	ITEM DESCRIPTION	YES	NO
8.	Anchor Bolts & Nuts - Anchor Bolts and Nuts, for mounting sign structures, luminaries and other items, shall be made from commercial bolt stock. See Contract Plans and Std. Plans for size and material type.		X
9.	Aluminum Pedestrian Handrail - Pedestrian handrail conforming to the type and material specifications set forth in the contract plans. Welding of aluminum shall be in accordance with Section 9-28.14(3).	X	
10.	Major Structural Steel Fabrication - Fabrication of major steel items such as trusses, beams, girders, etc., for bridges.	X	
11.	Minor Structural Steel Fabrication - Fabrication of minor steel Items such as special hangers, brackets, access doors for structures, access ladders for irrigation boxes, bridge expansion joint systems, etc., involving welding, cutting, punching and/or boring of holes. See Contact Plans for item description and shop drawings.	X	
12.	Aluminum Bridge Railing Type BP - Metal bridge railing conforming to the type and material specifications set forth in the Contract Plans. Welding of aluminum shall be in accordance with Section 9-28.14(3).		X
13.	Concrete Piling--Precast-Prestressed concrete piling for use as 55 and 70 ton concrete piling. Concrete to conform to Section 9-19.1 of Std. Spec..	X	
14.	Precast Manhole Types 1, 2, and 3 with cones, adjustment sections and flat top slabs. See Std. Plans.		X
15.	Precast Drywell Types 1, 2, and with cones and adjustment Sections. See Std. Plans.		X
16.	Precast Catch Basin - Catch Basin type 1, 1L, 1P, and 2 With adjustment sections. See Std. Plans.		X

	ITEM DESCRIPTION	YES	NO
17.	Precast Concrete Inlet - with adjustment sections, See Std. Plans		X
18.	Precast Drop Inlet Type 1 and 2 with metal grate supports. See Std. Plans.		X
19.	Precast Grate Inlet Type 2 with extension and top units. See Std. Plans		X
20.	Metal frames, vaned grates, and hoods for Combination Inlets. See Std. Plans		X
21.	Precast Concrete Utility Vaults - Precast Concrete utility vaults of various sizes. Used for in ground storage of utility facilities and controls. See Contract Plans for size and construction requirements. Shop drawings are to be provided for approval prior to casting		X
22.	Vault Risers - For use with Valve Vaults and Utilities X Vaults.		X
23.	Valve Vault - For use with underground utilities. See Contract Plans for details.		X
24.	Precast Concrete Barrier - Precast Concrete Barrier for use as new barrier or may also be used as Temporary Concrete Barrier. Only new state approved barrier may be used as permanent barrier.		X
25.	Reinforced Earth Wall Panels – Reinforced Earth Wall Panels in size and shape as shown in the Plans. Fabrication plant has annual approval for methods and materials to be used. See Shop Drawing. Fabrication at other locations may be approved, after facilities inspection, contact HQ. Lab.	X	
26.	Precast Concrete Walls - Precast Concrete Walls - tilt-up wall panel in size and shape as shown in Plans. Fabrication plant has annual approval for methods and materials to be used	X	

	ITEM DESCRIPTION	YES	NO
27.	Precast Railroad Crossings - Concrete Crossing Structure Slabs.	X	
28.	12, 18 and 26 inch Standard Precast Prestressed Girder – Standard Precast Prestressed Girder for use in structures. Fabricator plant has annual approval of methods and materials to be used. Shop Drawing to be provided for approval prior to casting girders. See Std. Spec. Section 6-02.3(25)A	X	
29.	Prestressed Concrete Girder Series 4-14 - Prestressed Concrete Girders for use in structures. Fabricator plant has annual approval of methods and materials to be used. Shop Drawing to be provided for approval prior to casting girders. See Std. Spec. Section 6-02.3(25)A .	X	
30.	Prestressed Tri-Beam Girder - Prestressed Tri-Beam Girders for use in structures. Fabricator plant has annual approval of methods and materials to be used. Shop Drawing to be provided for approval prior to casting girders. See Std. Spec. Section 6-02.3(25)A	X	
31.	Prestressed Precast Hollow-Core Slab – Precast Prestressed Hollow-core slab for use in structures. Fabricator plant has annual approval of methods and materials to be used. Shop Drawing to be provided for approval prior to casting girders. See Std. Spec. Section 6-02.3(25)A.	X	
32.	Prestressed-Bulb Tee Girder - Bulb Tee Prestressed Girder for use in structures. Fabricator plant has annual approval of methods and materials to be used. Shop Drawing to be provided for approval prior to casting girders. See Std. Spec. Section 6-02.3(25)A	X	
33.	Monument Case and Cover See Std. Plan.		X

	ITEM DESCRIPTION	YES	NO
34.	Cantilever Sign Structure - Cantilever Sign Structure fabricated from steel tubing meeting AASHTO-M-183. See Std. Plans, and Contract Plans for details. The steel structure shall be galvanized after fabrication in accordance with AASHTO-M-111.	X	
35.	Mono-tube Sign Structures - Mono-tube Sign Bridge fabricated to details shown in the Plans. Shop drawings for approval are required prior to fabrication.	X	
36.	Steel Sign Bridges - Steel Sign Bridges fabricated from steel tubing meeting AASHTO-M-138 for Aluminum Alloys. See Std. Plans, and Contract Plans for details. The steel structure shall be galvanized after fabrication in accordance with AASHTO-M-111.	X	
37.	Steel Sign Post - Fabricated Steel Sign Posts as detailed in Std Plans. Shop drawings for approval are to be provided prior to fabrication		X
38.	Light Standard-Prestressed - Spun, prestressed, hollow concrete poles.	X	
39.	Light Standards - Lighting Standards for use on highway illumination systems, poles to be fabricated to conform with methods and materials as specified on Std. Plans. See Specia Provisions for pre-approved drawings.	X	
40.	Traffic Signal Standards - Traffic Signal Standards for use on highway and/or street signal systems. Standards to be fabricated to conform with methods and material as specified on Std. Plans. See Special Provisions for pre-approved drawings	X	
41.	Precast Concrete Sloped Mountable Curb (Single and DualFaced) See Std. Plans.		X

	ITEM DESCRIPTION	YES	NO
42.	Traffic Signs - Prior to approval of a Fabricator of Traffic Signs, the sources of the following materials must be submitted and approved for reflective sheeting, legend material, and aluminum sheeting. **NOTE:** *** Fabrication inspection required. Only signs tagged "Fabrication Approved" by WSDOT Sign Fabrication Inspector to be installed	X	X
		Custom Message	Std Signing Message
43.	Cutting & bending reinforcing steel		X
44.	Guardrail components	X	X
		Custom End Sec	Standard Sec
45.	Aggregates/Concrete mixes	Covered by WAC 296-127-018	
46.	Asphalt	Covered by WAC 296-127-018	
47.	Fiber fabrics		X
48.	Electrical wiring/components		X
49.	treated or untreated timber pile		X
50.	Girder pads (elastomeric bearing)	X	
51.	Standard Dimension lumber		X
52.	Irrigation components		X

ITEM DESCRIPTION	YES	NO
53. Fencing materials		X
54. Guide Posts		X
55. Traffic Buttons		X
56. Epoxy		X
57. Cribbing		X
58. Water distribution materials		X
59. Steel "H" piles		X
60. Steel pipe for concrete pile casings		X
61. Steel pile tips, standard		X
62. Steel pile tips, custom	X	

Prefabricated items specifically produced for public works projects that are prefabricated in a county other than the county wherein the public works project is to be completed, the wage for the offsite prefabrication shall be the applicable prevailing wage for the county in which the actual prefabrication takes place.

It is the manufacturer of the prefabricated product to verify that the correct county wage rates are applied to work they perform.

See RCW 39.12.010
(The definition of "locality" in RCW 39.12.010(2) contains the phrase "wherein the physical work is being performed." The department interprets this phrase to mean the actual work site.

WSDOT's List of State Occupations not applicable to Heavy and Highway Construction Projects

This project is subject to the state hourly minimum rates for wages and fringe benefits in the contract provisions, as provided by the state Department of Labor and Industries.
The following list of occupations, is comprised of those occupations that are not normally used in the construction of heavy and highway projects.
When considering job classifications for use and / or payment when bidding on, or building heavy and highway construction projects for, or administered by WSDOT, these Occupations will be excepted from the included "Washington State Prevailing Wage Rates For Public Work Contracts" documents.

- Building Service Employees
- Electrical Fixture Maintenance Workers
- Electricians - Motor Shop
- Heating Equipment Mechanics
- Industrial Engine and Machine Mechanics
- Industrial Power Vacuum Cleaners
- Inspection, Cleaning, Sealing of Water Systems by Remote Control
- Laborers - Underground Sewer & Water
- Machinists (Hydroelectric Site Work)
- Modular Buildings
- Playground & Park Equipment Installers
- Power Equipment Operators - Underground Sewer & Water
- Residential *** ALL ASSOCIATED RATES ***
- Sign Makers and Installers (Non-Electrical)
- Sign Makers and Installers (Electrical)
- Stage Rigging Mechanics (Non Structural)

The following occupations may be used only as outlined in the preceding text concerning "WSDOT's list for Suppliers - Manufacturers - Fabricators"

- Fabricated Precast Concrete Products
- Metal Fabrication (In Shop)

Definitions for the Scope of Work for prevailing wages may be found at the Washington State Department of Labor and Industries web site and in WAC Chapter 296-127.

WAC 296-127-018 Agency filings affecting this section

Coverage and exemptions of workers involved in the production and delivery of gravel, concrete, asphalt, or similar materials.

(1) The materials covered under this section include but are not limited to: Sand, gravel, crushed rock, concrete, asphalt, or other similar materials.

(2) All workers, regardless of by whom employed, are subject to the provisions of chapter 39.12 RCW when they perform any or all of the following functions:

(a) They deliver or discharge any of the above-listed materials to a public works project site:

(i) At one or more point(s) directly upon the location where the material will be incorporated into the project; or

(ii) At multiple points at the project; or

(iii) Adjacent to the location and coordinated with the incorporation of those materials.

(b) They wait at or near a public works project site to perform any tasks subject to this section of the rule.

(c) They remove any materials from a public works construction site pursuant to contract requirements or specifications (e.g., excavated materials, materials from demolished structures, clean-up materials, etc.).

(d) They work in a materials production facility (e.g., batch plant, borrow pit, rock quarry, etc.,) which is established for a public works project for the specific, but not necessarily exclusive, purpose of supplying materials for the project.

(e) They deliver concrete to a public works site regardless of the method of incorporation.

(f) They assist or participate in the incorporation of any materials into the public works project.

(3) All travel time that relates to the work covered under subsection (2) of this section requires the payment of prevailing wages. Travel time includes time spent waiting to load, loading, transporting, waiting to unload, and delivering materials. Travel time would include all time spent in travel in support of a public works project whether the vehicle is empty or full. For example, travel time spent returning to a supply source to obtain another load of material for use on a public works site or returning to the public works site to obtain another load of excavated material is time spent in travel that is subject to prevailing wage. Travel to a supply source, including travel from a public works site, to obtain materials for use on a private project would not be travel subject to the prevailing wage.

(4) Workers are not subject to the provisions of chapter 39.12 RCW when they deliver materials to a stockpile.

(a) A "stockpile" is defined as materials delivered to a pile located away from the site of incorporation such that the stockpiled materials must be physically moved from the stockpile and transported to another location on the project site in order to be incorporated into the project.

(b) A stockpile does not include any of the functions described in subsection (2)(a) through (f) of this section; nor does a stockpile include materials delivered or distributed to multiple locations upon the project site; nor does a stockpile include materials dumped at the place of incorporation, or adjacent to the location and coordinated with the incorporation.

(5) The applicable prevailing wage rate shall be determined by the locality in which the work is performed. Workers subject to subsection (2)(d) of this section, who produce such materials at an off-site facility shall be paid the applicable prevailing wage rates for the county in which the off-site facility is located. Workers subject to subsection (2) of this section, who deliver such materials to a public works project site shall be paid the applicable prevailing wage rates for the county in which the public works project is located.

[Statutory Authority: Chapter 39.12 RCW, RCW 43.22.051 and 43.22.270. 08-24-101, § 296-127-018, filed 12/2/08, effective 1/2/09. Statutory Authority: Chapters 39.04 and 39.12 RCW and RCW 43.22.270. 92-01-104 and 92-08-101, § 296-127-018, filed 12/18/91 and 4/1/92, effective 8/31/92.]

State of Washington
Department of Labor & Industries

Prevailing Wage Section - Telephone 360-902-5335
PO Box 44540, Olympia, WA 98504-4540

Washington State Prevailing Wage

The PREVAILING WAGES listed here include both the hourly wage rate and the hourly rate of fringe benefits. On public works projects, worker's wage and benefit rates must add to not less than this total. A brief description of overtime calculation requirements are provided on the Benefit Code Key.

Journey Level Prevailing Wage Rates for the Effective Date: 3/4/2021

County	Trade	Job Classification	Wage	Holiday	Overtime	Note	*Risk Class
Lewis	Asbestos Abatement Workers	Journey Level	$52.39	5D	1H		View
Lewis	Boilermakers	Journey Level	$70.79	5N	1C		View
Lewis	Brick Mason	Journey Level	$60.57	7E	1N		View
Lewis	Brick Mason	Pointer-Caulker-Cleaner	$60.57	7E	1N		View
Lewis	Building Service Employees	Janitor	$13.69		1		View
Lewis	Building Service Employees	Shampooer	$13.69		1		View
Lewis	Building Service Employees	Waxer	$13.69		1		View
Lewis	Building Service Employees	Window Cleaner	$13.69		1		View
Lewis	Cabinet Makers (In Shop)	Journey Level	$23.17		1		View
Lewis	Carpenters	Acoustical Worker	$64.94	7A	4C		View
Lewis	Carpenters	Carpenter	$64.94	7A	4C		View
Lewis	Carpenters	Carpenters on Stationary Tools	$65.07	7A	4C		View
Lewis	Carpenters	Creosoted Material	$65.07	7A	4C		View
Lewis	Carpenters	Floor Finisher	$64.94	7A	4C		View
Lewis	Carpenters	Floor Layer	$64.94	7A	4C		View
Lewis	Carpenters	Scaffold Erector	$64.94	7A	4C		View
Lewis	Cement Masons	Application of all Composition Mastic	$64.84	7A	4U		View
Lewis	Cement Masons	Application of all Epoxy Material	$64.34	7A	4U		View
Lewis	Cement Masons	Application of all Plastic Material	$64.84	7A	4U		View
Lewis	Cement Masons	Application of Sealing Compound	$64.34	7A	4U		View
Lewis	Cement Masons	Application of Underlayment	$64.84	7A	4U		View
Lewis	Cement Masons	Building General	$64.34	7A	4U		View
Lewis	Cement Masons	Composition or Kalman Floors	$64.84	7A	4U		View
Lewis	Cement Masons	Concrete Paving	$64.34	7A	4U		View
Lewis	Cement Masons	Curb & Gutter Machine	$64.84	7A	4U		View
Lewis	Cement Masons	Curb & Gutter, Sidewalks	$64.34	7A	4U		View
Lewis	Cement Masons	Curing Concrete	$64.34	7A	4U		View

Lewis	Cement Masons	Finish Colored Concrete	$64.84	7A	4U		View
Lewis	Cement Masons	Floor Grinding	$64.84	7A	4U		View
Lewis	Cement Masons	Floor Grinding/Polisher	$64.34	7A	4U		View
Lewis	Cement Masons	Green Concrete Saw, self-powered	$64.84	7A	4U		View
Lewis	Cement Masons	Grouting of all Plates	$64.34	7A	4U		View
Lewis	Cement Masons	Grouting of all Tilt-up Panels	$64.34	7A	4U		View
Lewis	Cement Masons	Gunite Nozzleman	$64.84	7A	4U		View
Lewis	Cement Masons	Hand Powered Grinder	$64.84	7A	4U		View
Lewis	Cement Masons	Journey Level	$64.34	7A	4U		View
Lewis	Cement Masons	Patching Concrete	$64.34	7A	4U		View
Lewis	Cement Masons	Pneumatic Power Tools	$64.84	7A	4U		View
Lewis	Cement Masons	Power Chipping & Brushing	$64.84	7A	4U		View
Lewis	Cement Masons	Sand Blasting Architectural Finish	$64.84	7A	4U		View
Lewis	Cement Masons	Screed & Rodding Machine	$64.84	7A	4U		View
Lewis	Cement Masons	Spackling or Skim Coat Concrete	$64.34	7A	4U		View
Lewis	Cement Masons	Troweling Machine Operator	$64.84	7A	4U		View
Lewis	Cement Masons	Troweling Machine Operator on Colored Slabs	$64.84	7A	4U		View
Lewis	Cement Masons	Tunnel Workers	$64.84	7A	4U		View
Lewis	Divers & Tenders	Bell/Vehicle or Submersible Operator (Not Under Pressure)	$118.80	7A	4C		View
Lewis	Divers & Tenders	Dive Supervisor/Master	$81.98	7A	4C		View
Lewis	Divers & Tenders	Diver	$118.80	7A	4C	8V	View
Lewis	Divers & Tenders	Diver On Standby	$76.98	7A	4C		View
Lewis	Divers & Tenders	Diver Tender	$69.91	7A	4C		View
Lewis	Divers & Tenders	Manifold Operator	$69.91	7A	4C		View
Lewis	Divers & Tenders	Manifold Operator Mixed Gas	$74.91	7A	4C		View
Lewis	Divers & Tenders	Remote Operated Vehicle Operator/Technician	$69.91	7A	4C		View
Lewis	Divers & Tenders	Remote Operated Vehicle Tender	$65.19	7A	4C		View
Lewis	Dredge Workers	Assistant Engineer	$70.62	5D	3F		View
Lewis	Dredge Workers	Assistant Mate (Deckhand)	$70.07	5D	3F		View
Lewis	Dredge Workers	Boatmen	$70.62	5D	3F		View
Lewis	Dredge Workers	Engineer Welder	$71.97	5D	3F		View
Lewis	Dredge Workers	Leverman, Hydraulic	$73.41	5D	3F		View
Lewis	Dredge Workers	Mates	$70.62	5D	3F		View
Lewis	Dredge Workers	Oiler	$70.07	5D	3F		View
Lewis	Drywall Applicator	Journey Level	$64.94	5D	1H		View
Lewis	Drywall Tapers	Journey Level	$65.31	5P	1E		View
Lewis	Electrical Fixture Maintenance Workers	Journey Level	$13.69		1		View
Lewis	Electricians - Inside	Cable Splicer	$77.53	5C	1G		View
Lewis	Electricians - Inside	Journey Level	$72.56	5C	1G		View
Lewis	Electricians - Inside	Lead Covered Cable Splicer	$82.51	5C	1G		View

Lewis	Electricians - Inside	Welder	$77.53	5C	1G		View
Lewis	Electricians - Motor Shop	Craftsman	$15.37		1		View
Lewis	Electricians - Motor Shop	Journey Level	$14.69		1		View
Lewis	Electricians - Powerline Construction	Cable Splicer	$82.39	5A	4D		View
Lewis	Electricians - Powerline Construction	Certified Line Welder	$75.64	5A	4D		View
Lewis	Electricians - Powerline Construction	Groundperson	$49.17	5A	4D		View
Lewis	Electricians - Powerline Construction	Heavy Line Equipment Operator	$75.64	5A	4D		View
Lewis	Electricians - Powerline Construction	Journey Level Lineperson	$75.64	5A	4D		View
Lewis	Electricians - Powerline Construction	Line Equipment Operator	$64.54	5A	4D		View
Lewis	Electricians - Powerline Construction	Meter Installer	$49.17	5A	4D	8W	View
Lewis	Electricians - Powerline Construction	Pole Sprayer	$75.64	5A	4D		View
Lewis	Electricians - Powerline Construction	Powderperson	$56.49	5A	4D		View
Lewis	Electronic Technicians	Journey Level	$46.47	6Z	1B		View
Lewis	Elevator Constructors	Mechanic	$100.51	7D	4A		View
Lewis	Elevator Constructors	Mechanic In Charge	$108.53	7D	4A		View
Lewis	Fabricated Precast Concrete Products	Journey Level	$13.69		1		View
Lewis	Fabricated Precast Concrete Products	Journey Level - In-Factory Work Only	$13.69		1		View
Lewis	Fence Erectors	Fence Erector	$44.40	7A	4V	8Y	View
Lewis	Fence Erectors	Fence Laborer	$44.40	7A	4V	8Y	View
Lewis	Flaggers	Journey Level	$44.40	7A	4V	8Y	View
Lewis	Glaziers	Journey Level	$69.26	7L	1Y		View
Lewis	Heat & Frost Insulators And Asbestos Workers	Journeyman	$79.43	5J	4H		View
Lewis	Heating Equipment Mechanics	Journey Level	$89.61	7F	1E		View
Lewis	Hod Carriers & Mason Tenders	Journey Level	$54.01	7A	4V	8Y	View
Lewis	Industrial Power Vacuum Cleaner	Journey Level	$13.69		1		View
Lewis	Inland Boatmen	Boat Operator	$61.41	5B	1K		View
Lewis	Inland Boatmen	Cook	$56.48	5B	1K		View
Lewis	Inland Boatmen	Deckhand	$57.48	5B	1K		View
Lewis	Inland Boatmen	Deckhand Engineer	$58.81	5B	1K		View
Lewis	Inland Boatmen	Launch Operator	$58.89	5B	1K		View
Lewis	Inland Boatmen	Mate	$57.31	5B	1K		View
Lewis	Inspection/Cleaning/Sealing Of Sewer & Water Systems By Remote Control	Cleaner Operator, Foamer Operator	$13.69		1		View
Lewis	Inspection/Cleaning/Sealing Of Sewer & Water Systems By Remote Control	Grout Truck Operator	$13.69		1		View

Lewis	Inspection/Cleaning/Sealing Of Sewer & Water Systems By Remote Control	Head Operator	$13.69		1		View
Lewis	Inspection/Cleaning/Sealing Of Sewer & Water Systems By Remote Control	Technician	$13.69		1		View
Lewis	Inspection/Cleaning/Sealing Of Sewer & Water Systems By Remote Control	Tv Truck Operator	$13.69		1		View
Lewis	Insulation Applicators	Journey Level	$64.94	7A	4C		View
Lewis	Ironworkers	Journeyman	$76.78	7N	1O		View
Lewis	Laborers	Air, Gas Or Electric Vibrating Screed	$52.39	7A	4V	8Y	View
Lewis	Laborers	Airtrac Drill Operator	$54.01	7A	4V	8Y	View
Lewis	Laborers	Ballast Regular Machine	$52.39	7A	4V	8Y	View
Lewis	Laborers	Batch Weighman	$44.40	7A	4V	8Y	View
Lewis	Laborers	Brick Pavers	$52.39	7A	4V	8Y	View
Lewis	Laborers	Brush Cutter	$52.39	7A	4V	8Y	View
Lewis	Laborers	Brush Hog Feeder	$52.39	7A	4V	8Y	View
Lewis	Laborers	Burner	$52.39	7A	4V	8Y	View
Lewis	Laborers	Caisson Worker	$54.01	7A	4V	8Y	View
Lewis	Laborers	Carpenter Tender	$52.39	7A	4V	8Y	View
Lewis	Laborers	Cement Dumper-paving	$53.35	7A	4V	8Y	View
Lewis	Laborers	Cement Finisher Tender	$52.39	7A	4V	8Y	View
Lewis	Laborers	Change House Or Dry Shack	$52.39	7A	4V	8Y	View
Lewis	Laborers	Chipping Gun (30 Lbs. And Over)	$53.35	7A	4V	8Y	View
Lewis	Laborers	Chipping Gun (Under 30 Lbs.)	$52.39	7A	4V	8Y	View
Lewis	Laborers	Choker Setter	$52.39	7A	4V	8Y	View
Lewis	Laborers	Chuck Tender	$52.39	7A	4V	8Y	View
Lewis	Laborers	Clary Power Spreader	$53.35	7A	4V	8Y	View
Lewis	Laborers	Clean-up Laborer	$52.39	7A	4V	8Y	View
Lewis	Laborers	Concrete Dumper/Chute Operator	$53.35	7A	4V	8Y	View
Lewis	Laborers	Concrete Form Stripper	$52.39	7A	4V	8Y	View
Lewis	Laborers	Concrete Placement Crew	$53.35	7A	4V	8Y	View
Lewis	Laborers	Concrete Saw Operator/Core Driller	$53.35	7A	4V	8Y	View
Lewis	Laborers	Crusher Feeder	$44.40	7A	4V	8Y	View
Lewis	Laborers	Curing Laborer	$52.39	7A	4V	8Y	View
Lewis	Laborers	Demolition: Wrecking & Moving (Incl. Charred Material)	$52.39	7A	4V	8Y	View
Lewis	Laborers	Ditch Digger	$52.39	7A	4V	8Y	View
Lewis	Laborers	Diver	$54.01	7A	4V	8Y	View
Lewis	Laborers	Drill Operator (Hydraulic, Diamond)	$53.35	7A	4V	8Y	View
Lewis	Laborers	Dry Stack Walls	$52.39	7A	4V	8Y	View
Lewis	Laborers	Dump Person	$52.39	7A	4V	8Y	View
Lewis	Laborers	Epoxy Technician	$52.39	7A	4V	8Y	View

Lewis	Laborers	Erosion Control Worker	$52.39	7A	4V	8Y	View
Lewis	Laborers	Faller & Bucker Chain Saw	$53.35	7A	4V	8Y	View
Lewis	Laborers	Fine Graders	$52.39	7A	4V	8Y	View
Lewis	Laborers	Firewatch	$44.40	7A	4V	8Y	View
Lewis	Laborers	Form Setter	$52.39	7A	4V	8Y	View
Lewis	Laborers	Gabian Basket Builders	$52.39	7A	4V	8Y	View
Lewis	Laborers	General Laborer	$52.39	7A	4V	8Y	View
Lewis	Laborers	Grade Checker & Transit Person	$54.01	7A	4V	8Y	View
Lewis	Laborers	Grinders	$52.39	7A	4V	8Y	View
Lewis	Laborers	Grout Machine Tender	$52.39	7A	4V	8Y	View
Lewis	Laborers	Groutmen (Pressure) Including Post Tension Beams	$53.35	7A	4V	8Y	View
Lewis	Laborers	Guardrail Erector	$52.39	7A	4V	8Y	View
Lewis	Laborers	Hazardous Waste Worker (Level A)	$54.01	7A	4V	8Y	View
Lewis	Laborers	Hazardous Waste Worker (Level B)	$53.35	7A	4V	8Y	View
Lewis	Laborers	Hazardous Waste Worker (Level C)	$52.39	7A	4V	8Y	View
Lewis	Laborers	High Scaler	$54.01	7A	4V	8Y	View
Lewis	Laborers	Jackhammer	$53.35	7A	4V	8Y	View
Lewis	Laborers	Laserbeam Operator	$53.35	7A	4V	8Y	View
Lewis	Laborers	Maintenance Person	$52.39	7A	4V	8Y	View
Lewis	Laborers	Manhole Builder-Mudman	$53.35	7A	4V	8Y	View
Lewis	Laborers	Material Yard Person	$52.39	7A	4V	8Y	View
Lewis	Laborers	Motorman-Dinky Locomotive	$53.35	7A	4V	8Y	View
Lewis	Laborers	Nozzleman (Concrete Pump, Green Cutter When Using Combination Of High Pressure Air & Water On Concrete & Rock, Sandblast, Gunite, Shotcrete, Water Blaster, Vacuum Blaster)	$53.35	7A	4V	8Y	View
Lewis	Laborers	Pavement Breaker	$53.35	7A	4V	8Y	View
Lewis	Laborers	Pilot Car	$44.40	7A	4V	8Y	View
Lewis	Laborers	Pipe Layer Lead	$54.01	7A	4V	8Y	View
Lewis	Laborers	Pipe Layer/Tailor	$53.35	7A	4V	8Y	View
Lewis	Laborers	Pipe Pot Tender	$53.35	7A	4V	8Y	View
Lewis	Laborers	Pipe Reliner	$53.35	7A	4V	8Y	View
Lewis	Laborers	Pipe Wrapper	$53.35	7A	4V	8Y	View
Lewis	Laborers	Pot Tender	$52.39	7A	4V	8Y	View
Lewis	Laborers	Powderman	$54.01	7A	4V	8Y	View
Lewis	Laborers	Powderman's Helper	$52.39	7A	4V	8Y	View
Lewis	Laborers	Power Jacks	$53.35	7A	4V	8Y	View
Lewis	Laborers	Railroad Spike Puller - Power	$53.35	7A	4V	8Y	View
Lewis	Laborers	Raker - Asphalt	$54.01	7A	4V	8Y	View
Lewis	Laborers	Re-timberman	$54.01	7A	4V	8Y	View
Lewis	Laborers	Remote Equipment Operator	$53.35	7A	4V	8Y	View
Lewis	Laborers	Rigger/Signal Person	$53.35	7A	4V	8Y	View

Lewis	Laborers	Rip Rap Person	$52.39	7A	4V	8Y	View
Lewis	Laborers	Rivet Buster	$53.35	7A	4V	8Y	View
Lewis	Laborers	Rodder	$53.35	7A	4V	8Y	View
Lewis	Laborers	Scaffold Erector	$52.39	7A	4V	8Y	View
Lewis	Laborers	Scale Person	$52.39	7A	4V	8Y	View
Lewis	Laborers	Sloper (Over 20")	$53.35	7A	4V	8Y	View
Lewis	Laborers	Sloper Sprayer	$52.39	7A	4V	8Y	View
Lewis	Laborers	Spreader (Concrete)	$53.35	7A	4V	8Y	View
Lewis	Laborers	Stake Hopper	$52.39	7A	4V	8Y	View
Lewis	Laborers	Stock Piler	$52.39	7A	4V	8Y	View
Lewis	Laborers	Swinging Stage/Boatswain Chair	$44.40	7A	4V	8Y	View
Lewis	Laborers	Tamper & Similar Electric, Air & Gas Operated Tools	$53.35	7A	4V	8Y	View
Lewis	Laborers	Tamper (Multiple & Self-propelled)	$53.35	7A	4V	8Y	View
Lewis	Laborers	Timber Person - Sewer (Lagger, Shorer & Cribber)	$53.35	7A	4V	8Y	View
Lewis	Laborers	Toolroom Person (at Jobsite)	$52.39	7A	4V	8Y	View
Lewis	Laborers	Topper	$52.39	7A	4V	8Y	View
Lewis	Laborers	Track Laborer	$52.39	7A	4V	8Y	View
Lewis	Laborers	Track Liner (Power)	$53.35	7A	4V	8Y	View
Lewis	Laborers	Traffic Control Laborer	$47.48	7A	4V	9C	View
Lewis	Laborers	Traffic Control Supervisor	$50.31	7A	4V	9C	View
Lewis	Laborers	Truck Spotter	$52.39	7A	4V	8Y	View
Lewis	Laborers	Tugger Operator	$53.35	7A	4V	8Y	View
Lewis	Laborers	Tunnel Work-Compressed Air Worker 0-30 psi	$129.67	7A	4V	9B	View
Lewis	Laborers	Tunnel Work-Compressed Air Worker 30.01-44.00 psi	$134.70	7A	4V	9B	View
Lewis	Laborers	Tunnel Work-Compressed Air Worker 44.01-54.00 psi	$138.38	7A	4V	9B	View
Lewis	Laborers	Tunnel Work-Compressed Air Worker 54.01-60.00 psi	$144.08	7A	4V	9B	View
Lewis	Laborers	Tunnel Work-Compressed Air Worker 60.01-64.00 psi	$146.20	7A	4V	9B	View
Lewis	Laborers	Tunnel Work-Compressed Air Worker 64.01-68.00 psi	$151.30	7A	4V	9B	View
Lewis	Laborers	Tunnel Work-Compressed Air Worker 68.01-70.00 psi	$153.20	7A	4V	9B	View
Lewis	Laborers	Tunnel Work-Compressed Air Worker 70.01-72.00 psi	$155.20	7A	4V	9B	View
Lewis	Laborers	Tunnel Work-Compressed Air Worker 72.01-74.00 psi	$157.20	7A	4V	9B	View
Lewis	Laborers	Tunnel Work-Guage and Lock Tender	$54.11	7A	4V	8Y	View
Lewis	Laborers	Tunnel Work-Miner	$54.11	7A	4V	8Y	View
Lewis	Laborers	Vibrator	$53.35	7A	4V	8Y	View
Lewis	Laborers	Vinyl Seamer	$52.39	7A	4V	8Y	View
Lewis	Laborers	Watchman	$40.36	7A	4V	8Y	View

Lewis	Laborers	Welder	$53.35	7A	4V	8Y	View
Lewis	Laborers	Well Point Laborer	$53.35	7A	4V	8Y	View
Lewis	Laborers	Window Washer/Cleaner	$40.36	7A	4V	8Y	View
Lewis	Laborers - Underground Sewer & Water	General Laborer & Topman	$52.39	7A	4V	8Y	View
Lewis	Laborers - Underground Sewer & Water	Pipe Layer	$53.35	7A	4V	8Y	View
Lewis	Landscape Construction	Landscape Construction/Landscaping Or Planting Laborers	$40.36	7A	4V	8Y	View
Lewis	Landscape Construction	Landscape Operator	$69.02	7A	3K	8X	View
Lewis	Landscape Maintenance	Groundskeeper	$13.69		1		View
Lewis	Lathers	Journey Level	$64.94	5D	1H		View
Lewis	Marble Setters	Journey Level	$60.57	7E	1N		View
Lewis	Metal Fabrication (In Shop)	Fitter	$15.16		1		View
Lewis	Metal Fabrication (In Shop)	Laborer	$13.69		1		View
Lewis	Metal Fabrication (In Shop)	Machine Operator	$13.69		1		View
Lewis	Metal Fabrication (In Shop)	Painter	$13.69		1		View
Lewis	Metal Fabrication (In Shop)	Welder	$15.16		1		View
Lewis	Millwright	Journey Level	$66.44	7A	4C		View
Lewis	Modular Buildings	Cabinet Assembly	$13.69		1		View
Lewis	Modular Buildings	Electrician	$13.69		1		View
Lewis	Modular Buildings	Equipment Maintenance	$13.69		1		View
Lewis	Modular Buildings	Plumber	$13.69		1		View
Lewis	Modular Buildings	Production Worker	$13.69		1		View
Lewis	Modular Buildings	Tool Maintenance	$13.69		1		View
Lewis	Modular Buildings	Utility Person	$13.69		1		View
Lewis	Modular Buildings	Welder	$13.69		1		View
Lewis	Painters	Journey Level	$45.40	6Z	2B		View
Lewis	Pile Driver	Crew Tender	$69.91	7A	4C		View
Lewis	Pile Driver	Crew Tender/Technician	$69.91	7A	4C		View
Lewis	Pile Driver	Hyperbaric Worker - Compressed Air Worker 0-30.00 PSI	$80.76	7A	4C		View
Lewis	Pile Driver	Hyperbaric Worker - Compressed Air Worker 30.01 - 44.00 PSI	$85.76	7A	4C		View
Lewis	Pile Driver	Hyperbaric Worker - Compressed Air Worker 44.01 - 54.00 PSI	$89.76	7A	4C		View
Lewis	Pile Driver	Hyperbaric Worker - Compressed Air Worker 54.01 - 60.00 PSI	$94.76	7A	4C		View
Lewis	Pile Driver	Hyperbaric Worker - Compressed Air Worker 60.01 - 64.00 PSI	$97.26	7A	4C		View
Lewis	Pile Driver	Hyperbaric Worker - Compressed Air Worker 64.01 - 68.00 PSI	$102.26	7A	4C		View
Lewis	Pile Driver	Hyperbaric Worker -	$104.26	7A	4C		View

		Compressed Air Worker 68.01 - 70.00 PSI					
Lewis	Pile Driver	Hyperbaric Worker - Compressed Air Worker 70.01 - 72.00 PSI	$106.26	7A	4C		View
Lewis	Pile Driver	Hyperbaric Worker - Compressed Air Worker 72.01 - 74.00 PSI	$108.26	7A	4C		View
Lewis	Pile Driver	Journey Level	$65.19	7A	4C		View
Lewis	Plasterers	Journey Level	$61.67	7Q	1R		View
Lewis	Playground & Park Equipment Installers	Journey Level	$13.69		1		View
Lewis	Plumbers & Pipefitters	Journey Level	$79.47	5A	1G		View
Lewis	Power Equipment Operators	Asphalt Plant Operator	$70.17	7A	3K	8X	View
Lewis	Power Equipment Operators	Assistant Engineer	$66.30	7A	3K	8X	View
Lewis	Power Equipment Operators	Barrier Machine (zipper)	$69.55	7A	3K	8X	View
Lewis	Power Equipment Operators	Batch Plant Operator: Concrete	$69.55	7A	3K	8X	View
Lewis	Power Equipment Operators	Bobcat	$66.01	7A	3K	8X	View
Lewis	Power Equipment Operators	Brokk - Remote Demolition Equipment	$66.01	7A	3K	8X	View
Lewis	Power Equipment Operators	Brooms	$66.01	7A	3K	8X	View
Lewis	Power Equipment Operators	Bump Cutter	$69.55	7A	3K	8X	View
Lewis	Power Equipment Operators	Cableways	$70.17	7A	3K	8X	View
Lewis	Power Equipment Operators	Chipper	$69.55	7A	3K	8X	View
Lewis	Power Equipment Operators	Compressor	$66.01	7A	3K	8X	View
Lewis	Power Equipment Operators	Concrete Pump: Truck Mount With Boom Attachment Over 42m	$70.17	7A	3K	8X	View
Lewis	Power Equipment Operators	Concrete Finish Machine -laser Screed	$66.01	7A	3K	8X	View
Lewis	Power Equipment Operators	Concrete Pump - Mounted Or Trailer High Pressure Line Pump, Pump High Pressure	$69.02	7A	3K	8X	View
Lewis	Power Equipment Operators	Concrete Pump: Truck Mount With Boom Attachment Up To 42m	$69.55	7A	3K	8X	View
Lewis	Power Equipment Operators	Conveyors	$69.02	7A	3K	8X	View
Lewis	Power Equipment Operators	Cranes Friction: 200 tons and over	$72.63	7A	3K	8X	View
Lewis	Power Equipment Operators	Cranes, A-frame: 10 tons and under	$66.30	7A	3K	8X	View
Lewis	Power Equipment Operators	Cranes: 100 tons through 199 tons, or 150' of boom (including jib with attachments)	$71.20	7A	3K	8X	View
Lewis	Power Equipment Operators	Cranes: 20 tons through 44 tons with attachments	$69.87	7A	3K	8X	View
Lewis	Power Equipment Operators	Cranes: 200 tons- 299 tons, or 250' of boom including jib with attachments	$71.93	7A	3K	8X	View
Lewis	Power Equipment Operators	Cranes: 300 tons and over or	$72.63	7A	3K	8X	View

		300' of boom including jib with attachments					
Lewis	Power Equipment Operators	Cranes: 45 tons through 99 tons, under 150' of boom(including jib with attachments)	$70.49	7A	3K	8X	View
Lewis	Power Equipment Operators	Cranes: Friction cranes through 199 tons	$71.93	7A	3K	8X	View
Lewis	Power Equipment Operators	Cranes: through 19 tons with attachments, A-frame over 10 tons	$69.33	7A	3K	8X	View
Lewis	Power Equipment Operators	Crusher	$69.55	7A	3K	8X	View
Lewis	Power Equipment Operators	Deck Engineer/deck Winches (power)	$69.55	7A	3K	8X	View
Lewis	Power Equipment Operators	Derricks: on building work	$70.49	7A	3K	8X	View
Lewis	Power Equipment Operators	Dozers D-9 & Under	$69.02	7A	3K	8X	View
Lewis	Power Equipment Operators	Drill Oilers: Auger Type, Truck Or Crane Mount	$69.02	7A	3K	8X	View
Lewis	Power Equipment Operators	Drilling Machine	$70.88	7A	3K	8X	View
Lewis	Power Equipment Operators	Elevator and man-lift: permanent and shaft type	$66.30	7A	3K	8X	View
Lewis	Power Equipment Operators	Finishing Machine, Bidwell And Gamaco & Similar Equipment	$69.55	7A	3K	8X	View
Lewis	Power Equipment Operators	Forklift: 3000 lbs and over with attachments	$69.33	7A	3K	8X	View
Lewis	Power Equipment Operators	Forklifts: under 3000 lbs. with attachments	$66.30	7A	3K	8X	View
Lewis	Power Equipment Operators	Grade Engineer: Using Blueprints, Cut Sheets,etc.	$69.55	7A	3K	8X	View
Lewis	Power Equipment Operators	Gradechecker/stakeman	$66.01	7A	3K	8X	View
Lewis	Power Equipment Operators	Guardrail punch/Auger	$69.55	7A	3K	8X	View
Lewis	Power Equipment Operators	Hard Tail End Dump Articulating Off- Road Equipment 45 Yards. & Over	$70.17	7A	3K	8X	View
Lewis	Power Equipment Operators	Hard Tail End Dump Articulating Off-road Equipment Under 45 Yards	$69.55	7A	3K	8X	View
Lewis	Power Equipment Operators	Horizontal/directional Drill Locator	$69.02	7A	3K	8X	View
Lewis	Power Equipment Operators	Horizontal/directional Drill Operator	$69.55	7A	3K	8X	View
Lewis	Power Equipment Operators	Hydralifts/boom trucks: 10 tons and under	$66.30	7A	3K	8X	View
Lewis	Power Equipment Operators	Hydralifts/boom trucks: over 10 tons	$69.33	7A	3K	8X	View
Lewis	Power Equipment Operators	Loader, Overhead 8 Yards. & Over	$70.88	7A	3K	8X	View
Lewis	Power Equipment Operators	Loader, Overhead, 6 Yards. But Not Including 8 Yards	$70.17	7A	3K	8X	View
Lewis	Power Equipment Operators	Loaders, Overhead Under 6 Yards	$69.55	7A	3K	8X	View
Lewis	Power Equipment Operators	Loaders, Plant Feed	$69.55	7A	3K	8X	View

Lewis	Power Equipment Operators	Loaders: Elevating Type Belt	$69.02	7A	3K	8X	View
Lewis	Power Equipment Operators	Locomotives, All	$69.55	7A	3K	8X	View
Lewis	Power Equipment Operators	Material Transfer Device	$69.55	7A	3K	8X	View
Lewis	Power Equipment Operators	Mechanics: all (Leadmen - $0.50 per hour over mechanic)	$71.20	7A	3K	8X	View
Lewis	Power Equipment Operators	Motor patrol graders	$70.17	7A	3K	8X	View
Lewis	Power Equipment Operators	Mucking Machine, Mole, Tunnel Drill, Boring, Road Header And/or Shield	$70.17	7A	3K	8X	View
Lewis	Power Equipment Operators	Oil Distributors, Blower Distribution & Mulch Seeding Operator	$66.01	7A	3K	8X	View
Lewis	Power Equipment Operators	Outside Hoists (elevators and manlifts), Air Tuggers, Strato	$69.33	7A	3K	8X	View
Lewis	Power Equipment Operators	Overhead, bridge type Crane: 20 tons through 44 tons	$69.87	7A	3K	8X	View
Lewis	Power Equipment Operators	Overhead, Bridge Type Crane: 20 Tons Through 44 Tons	$69.55	7A	3K	8X	View
Lewis	Power Equipment Operators	Overhead, bridge type: 100 tons and over	$71.20	7A	3K	8X	View
Lewis	Power Equipment Operators	Overhead, bridge type: 45 tons through 99 tons	$70.49	7A	3K	8X	View
Lewis	Power Equipment Operators	Pavement Breaker	$66.01	7A	3K	8X	View
Lewis	Power Equipment Operators	Pile Driver (other Than Crane Mount)	$69.55	7A	3K	8X	View
Lewis	Power Equipment Operators	Plant Oiler - Asphalt, Crusher	$69.02	7A	3K	8X	View
Lewis	Power Equipment Operators	Posthole Digger, Mechanical	$66.01	7A	3K	8X	View
Lewis	Power Equipment Operators	Power Plant	$66.01	7A	3K	8X	View
Lewis	Power Equipment Operators	Pumps - Water	$66.01	7A	3K	8X	View
Lewis	Power Equipment Operators	Quad 9, HD 41, D10 And Over	$70.17	7A	3K	8X	View
Lewis	Power Equipment Operators	Quick Tower: no cab, under 100 feet in height based to boom	$66.30	7A	3K	8X	View
Lewis	Power Equipment Operators	Remote Control Operator On Rubber Tired Earth Moving Equipment	$70.17	7A	3K	8X	View
Lewis	Power Equipment Operators	Rigger and Bellman	$66.30	7A	3K	8X	View
Lewis	Power Equipment Operators	Rigger/Signal Person, Bellman(Certified)	$69.33	7A	3K	8X	View
Lewis	Power Equipment Operators	Rollagon	$70.17	7A	3K	8X	View
Lewis	Power Equipment Operators	Roller, Other Than Plant Mix	$66.01	7A	3K	8X	View
Lewis	Power Equipment Operators	Roller, Plant Mix Or Multi-lift Materials	$69.02	7A	3K	8X	View
Lewis	Power Equipment Operators	Roto-mill, Roto-grinder	$69.55	7A	3K	8X	View
Lewis	Power Equipment Operators	Saws - Concrete	$69.02	7A	3K	8X	View
Lewis	Power Equipment Operators	Scraper, Self Propelled Under 45 Yards	$69.55	7A	3K	8X	View
Lewis	Power Equipment Operators	Scrapers - Concrete & Carry All	$69.02	7A	3K	8X	View
Lewis	Power Equipment Operators	Scrapers, Self-propelled: 45 Yards And Over	$70.17	7A	3K	8X	View
Lewis	Power Equipment Operators	Service Engineers: equipment	$69.33	7A	3K	8X	View

Lewis	Power Equipment Operators	Shotcrete/gunite Equipment	$66.01	7A	3K	8X	View
Lewis	Power Equipment Operators	Shovel, Excavator, Backhoe, Tractors Under 15 Metric Tons	$69.02	7A	3K	8X	View
Lewis	Power Equipment Operators	Shovel, Excavator, Backhoe: Over 30 Metric Tons To 50 Metric Tons	$70.17	7A	3K	8X	View
Lewis	Power Equipment Operators	Shovel, Excavator, Backhoes, Tractors: 15 To 30 Metric Tons	$69.55	7A	3K	8X	View
Lewis	Power Equipment Operators	Shovel, Excavator, Backhoes: Over 50 Metric Tons To 90 Metric Tons	$70.88	7A	3K	8X	View
Lewis	Power Equipment Operators	Shovel, Excavator, Backhoes: Over 90 Metric Tons	$71.60	7A	3K	8X	View
Lewis	Power Equipment Operators	Slipform Pavers	$70.17	7A	3K	8X	View
Lewis	Power Equipment Operators	Spreader, Topsider & Screedman	$70.17	7A	3K	8X	View
Lewis	Power Equipment Operators	Subgrader Trimmer	$69.55	7A	3K	8X	View
Lewis	Power Equipment Operators	Tower Bucket Elevators	$69.02	7A	3K	8X	View
Lewis	Power Equipment Operators	Tower Crane: over 175' through 250' in height, base to boom	$71.93	7A	3K	8X	View
Lewis	Power Equipment Operators	Tower crane: up to 175' in height base to boom	$71.20	7A	3K	8X	View
Lewis	Power Equipment Operators	Tower Cranes: over 250' in height from base to boom.	$72.63	7A	3K	8X	View
Lewis	Power Equipment Operators	Transporters, All Track Or Truck Type	$70.17	7A	3K	8X	View
Lewis	Power Equipment Operators	Trenching Machines	$69.02	7A	3K	8X	View
Lewis	Power Equipment Operators	Truck Crane Oiler/Driver: 100 tons and over	$69.87	7A	3K	8X	View
Lewis	Power Equipment Operators	Truck crane oiler/driver: under 100 tons	$69.33	7A	3K	8X	View
Lewis	Power Equipment Operators	Truck Mount Portable Conveyor	$69.55	7A	3K	8X	View
Lewis	Power Equipment Operators	Welder	$70.49	7A	3K	8X	View
Lewis	Power Equipment Operators	Wheel Tractors, Farmall Type	$66.01	7A	3K	8X	View
Lewis	Power Equipment Operators	Yo Yo Pay Dozer	$69.55	7A	3K	8X	View
Lewis	Power Equipment Operators-Underground Sewer & Water	Asphalt Plant Operator	$70.17	7A	3K	8X	View
Lewis	Power Equipment Operators-Underground Sewer & Water	Assistant Engineer	$66.30	7A	3K	8X	View
Lewis	Power Equipment Operators-Underground Sewer & Water	Barrier Machine (zipper)	$69.55	7A	3K	8X	View
Lewis	Power Equipment Operators-Underground Sewer & Water	Batch Plant Operator: Concrete	$69.55	7A	3K	8X	View
Lewis	Power Equipment Operators-Underground Sewer & Water	Bobcat	$66.01	7A	3K	8X	View
Lewis	Power Equipment Operators-Underground Sewer & Water	Brokk - Remote Demolition Equipment	$66.01	7A	3K	8X	View
Lewis	Power Equipment Operators-Underground Sewer & Water	Brooms	$66.01	7A	3K	8X	View
Lewis	Power Equipment Operators-Underground Sewer & Water	Bump Cutter	$69.55	7A	3K	8X	View
Lewis	Power Equipment Operators-	Cableways	$70.17	7A	3K	8X	View

	Underground Sewer & Water						
Lewis	Power Equipment Operators-Underground Sewer & Water	Chipper	$69.55	7A	3K	8X	View
Lewis	Power Equipment Operators-Underground Sewer & Water	Compressor	$66.01	7A	3K	8X	View
Lewis	Power Equipment Operators-Underground Sewer & Water	Concrete Pump: Truck Mount With Boom Attachment Over 42m	$70.17	7A	3K	8X	View
Lewis	Power Equipment Operators-Underground Sewer & Water	Concrete Finish Machine -laser Screed	$66.01	7A	3K	8X	View
Lewis	Power Equipment Operators-Underground Sewer & Water	Concrete Pump - Mounted Or Trailer High Pressure Line Pump, Pump High Pressure	$69.02	7A	3K	8X	View
Lewis	Power Equipment Operators-Underground Sewer & Water	Concrete Pump: Truck Mount With Boom Attachment Up To 42m	$69.55	7A	3K	8X	View
Lewis	Power Equipment Operators-Underground Sewer & Water	Conveyors	$69.02	7A	3K	8X	View
Lewis	Power Equipment Operators-Underground Sewer & Water	Cranes Friction: 200 tons and over	$72.63	7A	3K	8X	View
Lewis	Power Equipment Operators-Underground Sewer & Water	Cranes, A-frame: 10 tons and under	$66.30	7A	3K	8X	View
Lewis	Power Equipment Operators-Underground Sewer & Water	Cranes: 100 tons through 199 tons, or 150' of boom (including jib with attachments)	$71.20	7A	3K	8X	View
Lewis	Power Equipment Operators-Underground Sewer & Water	Cranes: 20 tons through 44 tons with attachments	$69.87	7A	3K	8X	View
Lewis	Power Equipment Operators-Underground Sewer & Water	Cranes: 200 tons- 299 tons, or 250' of boom including jib with attachments	$71.93	7A	3K	8X	View
Lewis	Power Equipment Operators-Underground Sewer & Water	Cranes: 300 tons and over or 300' of boom including jib with attachments	$72.63	7A	3K	8X	View
Lewis	Power Equipment Operators-Underground Sewer & Water	Cranes: 45 tons through 99 tons, under 150' of boom(including jib with attachments)	$70.49	7A	3K	8X	View
Lewis	Power Equipment Operators-Underground Sewer & Water	Cranes: Friction cranes through 199 tons	$71.93	7A	3K	8X	View
Lewis	Power Equipment Operators-Underground Sewer & Water	Cranes: through 19 tons with attachments, A-frame over 10 tons	$69.33	7A	3K	8X	View
Lewis	Power Equipment Operators-Underground Sewer & Water	Crusher	$69.55	7A	3K	8X	View
Lewis	Power Equipment Operators-Underground Sewer & Water	Deck Engineer/deck Winches (power)	$69.55	7A	3K	8X	View
Lewis	Power Equipment Operators-Underground Sewer & Water	Derricks: on building work	$70.49	7A	3K	8X	View
Lewis	Power Equipment Operators-Underground Sewer & Water	Dozers D-9 & Under	$69.02	7A	3K	8X	View
Lewis	Power Equipment Operators-Underground Sewer & Water	Drill Oilers: Auger Type, Truck Or Crane Mount	$69.02	7A	3K	8X	View
Lewis	Power Equipment Operators-	Drilling Machine	$70.88	7A	3K	8X	View

	Underground Sewer & Water						
Lewis	Power Equipment Operators-Underground Sewer & Water	Elevator and man-lift: permanent and shaft type	$66.30	7A	3K	8X	View
Lewis	Power Equipment Operators-Underground Sewer & Water	Finishing Machine, Bidwell And Gamaco & Similar Equipment	$69.55	7A	3K	8X	View
Lewis	Power Equipment Operators-Underground Sewer & Water	Forklift: 3000 lbs and over with attachments	$69.33	7A	3K	8X	View
Lewis	Power Equipment Operators-Underground Sewer & Water	Forklifts: under 3000 lbs. with attachments	$66.30	7A	3K	8X	View
Lewis	Power Equipment Operators-Underground Sewer & Water	Grade Engineer: Using Blueprints, Cut Sheets,etc.	$69.55	7A	3K	8X	View
Lewis	Power Equipment Operators-Underground Sewer & Water	Gradechecker/stakeman	$66.01	7A	3K	8X	View
Lewis	Power Equipment Operators-Underground Sewer & Water	Guardrail punch/Auger	$69.55	7A	3K	8X	View
Lewis	Power Equipment Operators-Underground Sewer & Water	Hard Tail End Dump Articulating Off- Road Equipment 45 Yards. & Over	$70.17	7A	3K	8X	View
Lewis	Power Equipment Operators-Underground Sewer & Water	Hard Tail End Dump Articulating Off-road Equipment Under 45 Yards	$69.55	7A	3K	8X	View
Lewis	Power Equipment Operators-Underground Sewer & Water	Horizontal/directional Drill Locator	$69.02	7A	3K	8X	View
Lewis	Power Equipment Operators-Underground Sewer & Water	Horizontal/directional Drill Operator	$69.55	7A	3K	8X	View
Lewis	Power Equipment Operators-Underground Sewer & Water	Hydralifts/boom trucks: 10 tons and under	$66.30	7A	3K	8X	View
Lewis	Power Equipment Operators-Underground Sewer & Water	Hydralifts/boom trucks: over 10 tons	$69.33	7A	3K	8X	View
Lewis	Power Equipment Operators-Underground Sewer & Water	Loader, Overhead 8 Yards. & Over	$70.88	7A	3K	8X	View
Lewis	Power Equipment Operators-Underground Sewer & Water	Loader, Overhead, 6 Yards. But Not Including 8 Yards	$70.17	7A	3K	8X	View
Lewis	Power Equipment Operators-Underground Sewer & Water	Loaders, Overhead Under 6 Yards	$69.55	7A	3K	8X	View
Lewis	Power Equipment Operators-Underground Sewer & Water	Loaders, Plant Feed	$69.55	7A	3K	8X	View
Lewis	Power Equipment Operators-Underground Sewer & Water	Loaders: Elevating Type Belt	$69.02	7A	3K	8X	View
Lewis	Power Equipment Operators-Underground Sewer & Water	Locomotives, All	$69.55	7A	3K	8X	View
Lewis	Power Equipment Operators-Underground Sewer & Water	Material Transfer Device	$69.55	7A	3K	8X	View
Lewis	Power Equipment Operators-Underground Sewer & Water	Mechanics: all (Leadmen - $0.50 per hour over mechanic)	$71.20	7A	3K	8X	View
Lewis	Power Equipment Operators-Underground Sewer & Water	Motor patrol graders	$70.17	7A	3K	8X	View
Lewis	Power Equipment Operators-Underground Sewer & Water	Mucking Machine, Mole, Tunnel Drill, Boring, Road Header And/or Shield	$70.17	7A	3K	8X	View
Lewis	Power Equipment Operators-Underground Sewer & Water	Oil Distributors, Blower Distribution & Mulch Seeding Operator	$66.01	7A	3K	8X	View

Lewis	Power Equipment Operators-Underground Sewer & Water	Outside Hoists (elevators and manlifts), Air Tuggers, Strato	$69.33	7A	3K	8X	View
Lewis	Power Equipment Operators-Underground Sewer & Water	Overhead, bridge type Crane: 20 tons through 44 tons	$69.87	7A	3K	8X	View
Lewis	Power Equipment Operators-Underground Sewer & Water	Overhead, Bridge Type Crane: 20 Tons Through 44 Tons	$69.55	7A	3K	8X	View
Lewis	Power Equipment Operators-Underground Sewer & Water	Overhead, bridge type: 100 tons and over	$71.20	7A	3K	8X	View
Lewis	Power Equipment Operators-Underground Sewer & Water	Overhead, bridge type: 45 tons through 99 tons	$70.49	7A	3K	8X	View
Lewis	Power Equipment Operators-Underground Sewer & Water	Pavement Breaker	$66.01	7A	3K	8X	View
Lewis	Power Equipment Operators-Underground Sewer & Water	Pile Driver (other Than Crane Mount)	$69.55	7A	3K	8X	View
Lewis	Power Equipment Operators-Underground Sewer & Water	Plant Oiler - Asphalt, Crusher	$69.02	7A	3K	8X	View
Lewis	Power Equipment Operators-Underground Sewer & Water	Posthole Digger, Mechanical	$66.01	7A	3K	8X	View
Lewis	Power Equipment Operators-Underground Sewer & Water	Power Plant	$66.01	7A	3K	8X	View
Lewis	Power Equipment Operators-Underground Sewer & Water	Pumps - Water	$66.01	7A	3K	8X	View
Lewis	Power Equipment Operators-Underground Sewer & Water	Quad 9, HD 41, D10 And Over	$70.17	7A	3K	8X	View
Lewis	Power Equipment Operators-Underground Sewer & Water	Quick Tower: no cab, under 100 feet in height based to boom	$66.30	7A	3K	8X	View
Lewis	Power Equipment Operators-Underground Sewer & Water	Remote Control Operator On Rubber Tired Earth Moving Equipment	$70.17	7A	3K	8X	View
Lewis	Power Equipment Operators-Underground Sewer & Water	Rigger and Bellman	$66.30	7A	3K	8X	View
Lewis	Power Equipment Operators-Underground Sewer & Water	Rigger/Signal Person, Bellman(Certified)	$69.33	7A	3K	8X	View
Lewis	Power Equipment Operators-Underground Sewer & Water	Rollagon	$70.17	7A	3K	8X	View
Lewis	Power Equipment Operators-Underground Sewer & Water	Roller, Other Than Plant Mix	$66.01	7A	3K	8X	View
Lewis	Power Equipment Operators-Underground Sewer & Water	Roller, Plant Mix Or Multi-lift Materials	$69.02	7A	3K	8X	View
Lewis	Power Equipment Operators-Underground Sewer & Water	Roto-mill, Roto-grinder	$69.55	7A	3K	8X	View
Lewis	Power Equipment Operators-Underground Sewer & Water	Saws - Concrete	$69.02	7A	3K	8X	View
Lewis	Power Equipment Operators-Underground Sewer & Water	Scraper, Self Propelled Under 45 Yards	$69.55	7A	3K	8X	View
Lewis	Power Equipment Operators-Underground Sewer & Water	Scrapers - Concrete & Carry All	$69.02	7A	3K	8X	View
Lewis	Power Equipment Operators-Underground Sewer & Water	Scrapers, Self-propelled: 45 Yards And Over	$70.17	7A	3K	8X	View
Lewis	Power Equipment Operators-Underground Sewer & Water	Service Engineers: equipment	$69.33	7A	3K	8X	View
Lewis	Power Equipment Operators-	Shotcrete/gunite Equipment	$66.01	7A	3K	8X	View

	Underground Sewer & Water						
Lewis	Power Equipment Operators-Underground Sewer & Water	Shovel, Excavator, Backhoe, Tractors Under 15 Metric Tons	$69.02	7A	3K	8X	View
Lewis	Power Equipment Operators-Underground Sewer & Water	Shovel, Excavator, Backhoe: Over 30 Metric Tons To 50 Metric Tons	$70.17	7A	3K	8X	View
Lewis	Power Equipment Operators-Underground Sewer & Water	Shovel, Excavator, Backhoes, Tractors: 15 To 30 Metric Tons	$69.55	7A	3K	8X	View
Lewis	Power Equipment Operators-Underground Sewer & Water	Shovel, Excavator, Backhoes: Over 50 Metric Tons To 90 Metric Tons	$70.88	7A	3K	8X	View
Lewis	Power Equipment Operators-Underground Sewer & Water	Slipform Pavers	$70.17	7A	3K	8X	View
Lewis	Power Equipment Operators-Underground Sewer & Water	Spreader, Topsider & Screedman	$70.17	7A	3K	8X	View
Lewis	Power Equipment Operators-Underground Sewer & Water	Subgrader Trimmer	$69.55	7A	3K	8X	View
Lewis	Power Equipment Operators-Underground Sewer & Water	Tower Bucket Elevators	$69.02	7A	3K	8X	View
Lewis	Power Equipment Operators-Underground Sewer & Water	Tower Crane: over 175' through 250' in height, base to boom	$71.93	7A	3K	8X	View
Lewis	Power Equipment Operators-Underground Sewer & Water	Tower crane: up to 175' in height base to boom	$71.20	7A	3K	8X	View
Lewis	Power Equipment Operators-Underground Sewer & Water	Tower Cranes: over 250' in height from base to boom.	$72.63	7A	3K	8X	View
Lewis	Power Equipment Operators-Underground Sewer & Water	Transporters, All Track Or Truck Type	$70.17	7A	3K	8X	View
Lewis	Power Equipment Operators-Underground Sewer & Water	Trenching Machines	$69.02	7A	3K	8X	View
Lewis	Power Equipment Operators-Underground Sewer & Water	Truck Crane Oiler/Driver: 100 tons and over	$69.87	7A	3K	8X	View
Lewis	Power Equipment Operators-Underground Sewer & Water	Truck crane oiler/driver: under 100 tons	$69.33	7A	3K	8X	View
Lewis	Power Equipment Operators-Underground Sewer & Water	Truck Mount Portable Conveyor	$69.55	7A	3K	8X	View
Lewis	Power Equipment Operators-Underground Sewer & Water	Welder	$70.49	7A	3K	8X	View
Lewis	Power Equipment Operators-Underground Sewer & Water	Wheel Tractors, Farmall Type	$66.01	7A	3K	8X	View
Lewis	Power Equipment Operators-Underground Sewer & Water	Yo Yo Pay Dozer	$69.55	7A	3K	8X	View
Lewis	Power Line Clearance Tree Trimmers	Journey Level In Charge	$55.03	5A	4A		View
Lewis	Power Line Clearance Tree Trimmers	Spray Person	$52.24	5A	4A		View
Lewis	Power Line Clearance Tree Trimmers	Tree Equipment Operator	$55.03	5A	4A		View
Lewis	Power Line Clearance Tree Trimmers	Tree Trimmer	$49.21	5A	4A		View
Lewis	Power Line Clearance Tree Trimmers	Tree Trimmer Groundperson	$37.47	5A	4A		View
Lewis	Refrigeration & Air Conditioning Mechanics	Journey Level	$79.46	5A	1G		View

Lewis	Residential Brick Mason	Journey Level	$21.96		1		View
Lewis	Residential Carpenters	Journey Level	$24.89		1		View
Lewis	Residential Cement Masons	Journey Level	$16.79		1		View
Lewis	Residential Drywall Applicators	Journey Level	$36.07		1		View
Lewis	Residential Drywall Tapers	Journey Level	$24.48		1		View
Lewis	Residential Electricians	Journey Level	$37.53	5A	1B		View
Lewis	Residential Glaziers	Journey Level	$25.40		1		View
Lewis	Residential Insulation Applicators	Journey Level	$28.53		1		View
Lewis	Residential Laborers	Journey Level	$23.10		1		View
Lewis	Residential Marble Setters	Journey Level	$21.96		1		View
Lewis	Residential Painters	Journey Level	$18.76		1		View
Lewis	Residential Plumbers & Pipefitters	Journey Level	$26.35		1		View
Lewis	Residential Refrigeration & Air Conditioning Mechanics	Journey Level	$32.89		1		View
Lewis	Residential Sheet Metal Workers	Journey Level	$33.28		1		View
Lewis	Residential Soft Floor Layers	Journey Level	$14.86		1		View
Lewis	Residential Sprinkler Fitters (Fire Protection)	Journey Level	$20.28		1		View
Lewis	Residential Stone Masons	Journey Level	$21.96		1		View
Lewis	Residential Terrazzo Workers	Journey Level	$14.86		1		View
Lewis	Residential Terrazzo/Tile Finishers	Journey Level	$14.86		1		View
Lewis	Residential Tile Setters	Journey Level	$14.86		1		View
Lewis	Roofers	Journey Level	$56.95	5A	2O		View
Lewis	Roofers	Using Irritable Bituminous Materials	$59.95	5A	2O		View
Lewis	Sheet Metal Workers	Journey Level (Field or Shop)	$89.61	7F	1E		View
Lewis	Sign Makers & Installers (Electrical)	Journey Level	$18.04		1		View
Lewis	Sign Makers & Installers (Non-Electrical)	Journey Level	$52.39	7A	4V	8Y	View
Lewis	Soft Floor Layers	Journey Level	$51.91	5A	3J		View
Lewis	Solar Controls For Windows	Journey Level	$13.69		1		View
Lewis	Sprinkler Fitters (Fire Protection)	Journey Level	$66.01	7J	1R		View
Lewis	Stage Rigging Mechanics (Non Structural)	Journey Level	$13.69		1		View
Lewis	Stone Masons	Journey Level	$60.57	7E	1N		View
Lewis	Street And Parking Lot Sweeper Workers	Journey Level	$16.00		1		View
Lewis	Surveyors	Chain Person	$68.39	7A	3K		View
Lewis	Surveyors	Instrument Person	$69.02	7A	3K		View
Lewis	Surveyors	Party Chief	$70.17	7A	3K		View
Lewis	Telecommunication Technicians	Journey Level	$46.47	6Z	1B		View
Lewis	Telephone Line Construction - Outside	Cable Splicer	$37.40	5A	2B		View
Lewis	Telephone Line Construction -	Hole Digger/Ground Person	$25.04	5A	2B		View

	Outside						
Lewis	Telephone Line Construction - Outside	Telephone Equipment Operator (Light)	$31.22	5A	2B		View
Lewis	Telephone Line Construction - Outside	Telephone Lineperson	$35.34	5A	2B		View
Lewis	Terrazzo Workers	Journey Level	$55.71	7E	1N		View
Lewis	Tile Setters	Journey Level	$55.71	7E	1N		View
Lewis	Tile, Marble & Terrazzo Finishers	Finisher	$46.54	7E	1N		View
Lewis	Traffic Control Stripers	Journey Level	$49.13	7A	1K		View
Lewis	Truck Drivers	Asphalt Mix Over 16 Yards	$63.80	5D	4Y	8L	View
Lewis	Truck Drivers	Asphalt Mix To 16 Yards	$62.96	5D	4Y	8L	View
Lewis	Truck Drivers	Dump Truck	$62.96	5D	4Y	8L	View
Lewis	Truck Drivers	Dump Truck & Trailer	$63.80	5D	4Y	8L	View
Lewis	Truck Drivers	Other Trucks	$63.80	5D	4Y	8L	View
Lewis	Truck Drivers - Ready Mix	Transit Mix	$63.80	5D	4Y	8L	View
Lewis	Well Drillers & Irrigation Pump Installers	Irrigation Pump Installer	$18.18		1		View
Lewis	Well Drillers & Irrigation Pump Installers	Oiler	$13.69		1		View
Lewis	Well Drillers & Irrigation Pump Installers	Well Driller	$18.00		1		View

Federal Prevailing Wage Rates

"General Decision Number: WA20210051 01/01/2021

Superseded General Decision Number: WA20200051

State: Washington

Construction Type: Heavy
including water sewer line construction

County: Lewis County in Washington.

HEAVY CONSTRUCTION PROJECTS (including sewer/water construction).

Note: Under Executive Order (EO) 13658, an hourly minimum wage of $10.95 for calendar year 2021 applies to all contracts subject to the Davis-Bacon Act for which the contract is awarded (and any solicitation was issued) on or after January 1, 2015. If this contract is covered by the EO, the contractor must pay all workers in any classification listed on this wage determination at least $10.95 per hour (or the applicable wage rate listed on this wage determination, if it is higher) for all hours spent performing on the contract in calendar year 2021. If this contract is covered by the EO and a classification considered necessary for performance of work on the contract does not appear on this wage determination, the contractor must pay workers in that classification at least the wage rate determined through the conformance process set forth in 29 CFR 5.5(a)(1)(ii) (or the EO minimum wage rate, if it is higher than the conformed wage rate). The EO minimum wage rate will be adjusted annually. Please note that this EO applies to the above-mentioned types of contracts entered into by the federal government that are subject to the Davis-Bacon Act itself, but it does not apply to contracts subject only to the Davis-Bacon Related Acts, including those set forth at 29 CFR 5.1(a)(2)-(60). Additional information on contractor requirements and worker protections under the EO is available at www.dol.gov/whd/govcontracts.

Modification Number	Publication Date
0	01/01/2021

CARP0030-003 06/01/2020

	Rates	Fringes
CARPENTER (Including Formwork)...	$ 46.92	18.02
MILLWRIGHT.....	$ 48.42	18.02

(HOURLY ZONE PAY: WESTERN AND CENTRAL WASHINGTON - ALL CLASSIFICATIONS EXCEPT MILLWRIGHTS AND PILEDRIVERS

Hourly Zone Pay shall be paid on jobs located outside of the free zone computed from the city center of the following listed cities:

Seattle	Olympia	Bellingham
Auburn	Bremerton	Anacortes
Renton	Shelton	Yakima
Aberdeen-Hoquiam	Tacoma	Wenatchee
Ellensburg	Everett	Port Angeles

```
Centralia          Mount Vernon   Sunnyside
Chelan             Pt. Townsend

Zone Pay:
0 -25 radius miles     Free
26-35 radius miles    $1.00/hour
36-45 radius miles    $1.15/hour
46-55 radius miles    $1.35/hour
Over 55 radius miles  $1.55/hour

  (HOURLY ZONE PAY: WESTERN AND CENTRAL WASHINGTON - MILLWRIGHT
  AND PILEDRIVER ONLY)

  Hourly Zone Pay shall be computed from Seattle Union Hall,
  Tacoma City center, and Everett City center

Zone Pay:
0 -25 radius miles      Free
26-45 radius miles      $ .70/hour
Over 45 radius miles    $1.50/hour

-----------------------------------------------------------------
 ELEC0076-005 08/31/2020

                                   Rates          Fringes

ELECTRICIAN......................$ 48.32            23.67
-----------------------------------------------------------------
 ENGI0612-014 06/01/2020

                                   Rates          Fringes

POWER EQUIPMENT OPERATOR
     GROUP  1A..................$ 48.41            22.47
     GROUP  1AA.................$ 49.13            22.47
     GROUP  1AAA................$ 49.83            22.47
     GROUP 1....................$ 47.70            22.47
     GROUP 2....................$ 47.08            22.47
     GROUP 3....................$ 46.55            22.47
     GROUP 4....................$ 43.54            22.47

Zone Differential (Add to Zone 1 rates):
Zone 2 (26-45 radius miles) = $1.00
Zone 3 (Over 45 radius miles) - $1.30

BASEPOINTS:  CENTRALIA, OLYMPIA, TACOMA

POWER EQUIPMENT OPERATORS CLASSIFICATIONS

  GROUP 1AAA - Cranes-over 300 tons, or 300 ft of boom
  (including jib with attachments)

  GROUP 1AA - Cranes 200 to 300 tons, or 250 ft of boom
  (including jib with attachments); Tower crane over 175 ft
  in height, base to boom; Excavator/Trackhoe, Backhoe: Over
  90 metric tons

  GROUP 1A - Cranes, 100 tons thru 199 tons, or 150 ft of boom
  (including jib with attachments); Crane-overhead, bridge
  type, 100 tons and over; Tower crane up to 175 ft in height
  base to boom; Excavator/Trackhoe, Backhoe: over 50 metric
  tons to 90 metric tons; LOADERS-8 yards and over

  GROUP 1 - Cranes 45 tons thru 99 tons, under 150 ft of boom
  (including jib with attachments); Crane-overhead, bridge
```

type, 45 tons thru 99 tons; Derricks on building work;; Excavator/Trackhoe, Backhoe: over 30 metric tons to 50 metric tons; Loaders- 6 yards to, but not including, 8 yards

GROUP 2 - Cranes, 20 tons thru 44 tons with attachments; Crane-overhead, bridge type-20 tons through 44 tons; Excavator/Trackhoe, Backhoe: 15 to 30 metric tons; Loader-under 6 yards; Drilling Machine; Grader-finishing

GROUP 3 - Cranes-thru 19 tons with attachments; A-frame crane over 10 tons; Excavator/Trackhoe, Backhoe: under 15 metric tons; Forklift: 3000 lbs and over with attachments; Oiler; Grader-nonfinishing; Boom Truck over 10 tons

GROUP 4 -Cranes-A frame-10 tons and under; Forklift: under 3000 lbs with attachments; Boom Truck 10 Tons and under

HANDLING OF HAZARDOUS WASTE MATERIALS: Personnel in all craft classifications subject to working inside a federally designated hazardous perimeter shall be elgible for compensation in accordance with the following group schedule relative to the level of hazardous waste as outlined in the specific hazardous waste project site safety plan.

H-1 Base wage rate when on a hazardous waste site when not outfitted with protective clothing, Class ""D"" Suit - Base wage rate plus $ .50 per hour.
H-2 Class ""C"" Suit - Base wage rate plus $1.00 per hour.
H-3 Class ""B"" Suit - Base wage rate plus $1.50 per hour.
H-4 Class ""A"" Suit - Base wage rate plus $2.00 per hour.

---

* IRON0086-012 07/01/2020

	Rates	Fringes
Ironworker (REINFORCING & STRUCTURAL)	$ 43.95	31.00

LABO0252-003 06/01/2020

ZONE 1:

	Rates	Fringes
LABORER		
GROUP 2	$ 31.82	12.44
GROUP 3	$ 39.81	12.44
GROUP 4	$ 40.77	12.44
GROUP 5	$ 41.43	12.44

ZONE DIFFERENTIAL (ADD TO ZONE 1 RATES):
ZONE 2 - $1.00
ZONE 3 - $1.30

BASE POINTS: BELLINGHAM, MT. VERNON, EVERETT, SEATTLE, KENT, TACOMA, OLYMPIA, CENTRALIA, ABERDEEN, SHELTON, PT. TOWNSEND, PT. ANGELES, AND BREMERTON

ZONE 1 - Projects within 25 radius miles of the respective city hall
ZONE 2 - More than 25 but less than 45 radius miles from the respective city hall
ZONE 3 - More than 45 radius miles from the respective city

hall

LABORERS CLASSIFICATIONS

GROUP 2: Flagger

GROUP 3: Chipping Guns (Under 30 lbs); General or Common Laborer

GROUP 4: Chipping Guns (Over 30 lbs); Pipe Layer

GROUP 5: Mason Tender-Brick; Mason Tender-Cement/Concrete; Grade Checker

---

PAIN0005-008 07/01/2020

	Rates	Fringes
PAINTER (Brush, Roller and Spray)	$ 25.19	13.20

PLAS0528-004 06/01/2020

	Rates	Fringes
CEMENT MASON/CONCRETE FINISHER	$ 45.80	18.54

SUWA2009-042 08/07/2009

	Rates	Fringes
FENCE ERECTOR	$ 15.00	0.00
LABORER: Landscape	$ 14.67	0.00
OPERATOR: Bulldozer	$ 29.26	0.00
OPERATOR: Mechanic	$ 25.00	0.00
OPERATOR: Roller	$ 25.25	8.20
PIPEFITTER	$ 33.30	6.51
TRUCK DRIVER: Dump Truck	$ 22.82	5.86
TRUCK DRIVER: Water Truck	$ 24.36	8.30
TRUCK DRIVER: 10 Yard Truck	$ 24.61	8.34

WELDERS - Receive rate prescribed for craft performing operation to which welding is incidental.

==========

Note: Executive Order (EO) 13706, Establishing Paid Sick Leave for Federal Contractors applies to all contracts subject to the Davis-Bacon Act for which the contract is awarded (and any solicitation was issued) on or after January 1, 2017. If this contract is covered by the EO, the contractor must provide employees with 1 hour of paid sick leave for every 30 hours they work, up to 56 hours of paid sick leave each year. Employees must be permitted to use paid sick leave for their own illness, injury or other health-related needs, including

preventive care; to assist a family member (or person who is like family to the employee) who is ill, injured, or has other health-related needs, including preventive care; or for reasons resulting from, or to assist a family member (or person who is like family to the employee) who is a victim of, domestic violence, sexual assault, or stalking. Additional information on contractor requirements and worker protections under the EO is available at www.dol.gov/whd/govcontracts.

Unlisted classifications needed for work not included within the scope of the classifications listed may be added after award only as provided in the labor standards contract clauses (29CFR 5.5 (a) (1) (ii)).

The body of each wage determination lists the classification and wage rates that have been found to be prevailing for the cited type(s) of construction in the area covered by the wage determination. The classifications are listed in alphabetical order of ""identifiers"" that indicate whether the particular rate is a union rate (current union negotiated rate for local), a survey rate (weighted average rate) or a union average rate (weighted union average rate).

Union Rate Identifiers

A four letter classification abbreviation identifier enclosed in dotted lines beginning with characters other than ""SU"" or ""UAVG"" denotes that the union classification and rate were prevailing for that classification in the survey. Example: PLUM0198-005 07/01/2014. PLUM is an abbreviation identifier of the union which prevailed in the survey for this classification, which in this example would be Plumbers. 0198 indicates the local union number or district council number where applicable, i.e., Plumbers Local 0198. The next number, 005 in the example, is an internal number used in processing the wage determination. 07/01/2014 is the effective date of the most current negotiated rate, which in this example is July 1, 2014.

Union prevailing wage rates are updated to reflect all rate changes in the collective bargaining agreement (CBA) governing this classification and rate.

Survey Rate Identifiers

Classifications listed under the ""SU"" identifier indicate that no one rate prevailed for this classification in the survey and the published rate is derived by computing a weighted average rate based on all the rates reported in the survey for that classification. As this weighted average rate includes all rates reported in the survey, it may include both union and non-union rates. Example: SULA2012-007 5/13/2014. SU indicates the rates are survey rates based on a weighted average calculation of rates and are not majority rates. LA indicates the State of Louisiana. 2012 is the year of survey on which these classifications and rates are based. The next number, 007 in the example, is an internal number used in producing the wage determination. 5/13/2014 indicates the survey completion date for the classifications and rates under that identifier.

Survey wage rates are not updated and remain in effect until a

new survey is conducted.

Union Average Rate Identifiers

Classification(s) listed under the UAVG identifier indicate that no single majority rate prevailed for those classifications; however, 100% of the data reported for the classifications was union data. EXAMPLE: UAVG-OH-0010 08/29/2014. UAVG indicates that the rate is a weighted union average rate. OH indicates the state. The next number, 0010 in the example, is an internal number used in producing the wage determination. 08/29/2014 indicates the survey completion date for the classifications and rates under that identifier.

A UAVG rate will be updated once a year, usually in January of each year, to reflect a weighted average of the current negotiated/CBA rate of the union locals from which the rate is based.

WAGE DETERMINATION APPEALS PROCESS

1.) Has there been an initial decision in the matter? This can be:

* an existing published wage determination
* a survey underlying a wage determination
* a Wage and Hour Division letter setting forth a position on a wage determination matter
* a conformance (additional classification and rate) ruling

On survey related matters, initial contact, including requests for summaries of surveys, should be with the Wage and Hour Regional Office for the area in which the survey was conducted because those Regional Offices have responsibility for the Davis-Bacon survey program. If the response from this initial contact is not satisfactory, then the process described in 2.) and 3.) should be followed.

With regard to any other matter not yet ripe for the formal process described here, initial contact should be with the Branch of Construction Wage Determinations. Write to:

Branch of Construction Wage Determinations
Wage and Hour Division
U.S. Department of Labor
200 Constitution Avenue, N.W.
Washington, DC 20210

2.) If the answer to the question in 1.) is yes, then an interested party (those affected by the action) can request review and reconsideration from the Wage and Hour Administrator (See 29 CFR Part 1.8 and 29 CFR Part 7). Write to:

Wage and Hour Administrator
U.S. Department of Labor
200 Constitution Avenue, N.W.
Washington, DC 20210

The request should be accompanied by a full statement of the interested party's position and by any information (wage payment data, project description, area practice material,

etc.) that the requestor considers relevant to the issue.

3.) If the decision of the Administrator is not favorable, an interested party may appeal directly to the Administrative Review Board (formerly the Wage Appeals Board). Write to:

Administrative Review Board
U.S. Department of Labor
200 Constitution Avenue, N.W.
Washington, DC 20210

4.) All decisions by the Administrative Review Board are final.

==========

END OF GENERAL DECISION
"

PART 8

STANDARD PLANS

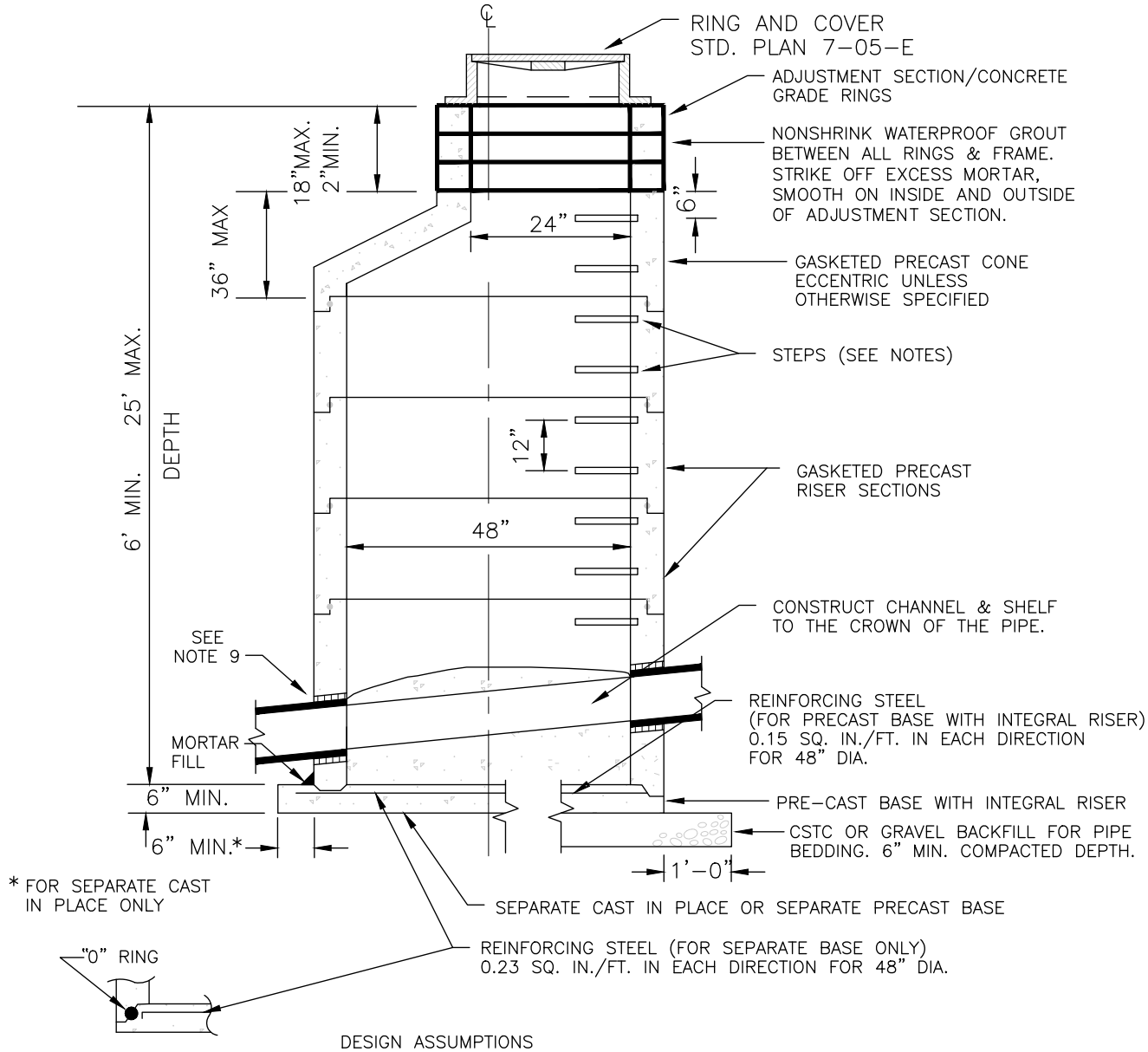

DESIGN ASSUMPTIONS

HEIGHT: 8' TO 12' : SOIL BEARING VALUE EQUALS 3300 #/FT^2 (MIN.)
HEIGHT: 12' TO 25': SOIL BEARING VALUE EQUALS 3800 #/FT^2 (MIN.)

NOTES

1. MANHOLES TO BE CONSTRUCTED IN ACCORDANCE WITH AASHTO M-199 (ASTM C 478) UNLESS OTHERWISE SHOWN ON PLANS OR NOTED IN THE STANDARD SPECIFICATIONS, AND IN ACCORDANCE WITH CURRENT WSDOT\ APWA STANDARD SPECIFICATIONS.
2. ALL REINFORCED CAST IN PLACE CONCRETE SHALL BE CLASS 4000. NON-REINFORCED CONCRETE IN CHANNEL AND SHELF SHALL BE CLASS 3000. ALL PRECAST CONCRETE SHALL BE CLASS 4000.
3. PRECAST BASES SHALL BE FURNISHED WITH CUTOUTS OR KNOCKOUTS. KNOCKOUTS SHALL HAVE A WALL THICKNESS OF 2" MINIMUM.
4. KNOCKOUT OR CUTOUT HOLE SIZE IS EQUAL TO PIPE OUTER DIAMETER PLUS MANHOLE WALL THICKNESS. MAXIMUM PIPE SIZE IS 21" FOR 48" MANHOLE. (MAX. PIPE SIZE MAY BE LIMITED BY PIPE CONFIGURATION.) MINIMUM DISTANCE BETWEEN HOLES IS 8".
5. ALL BASE REINFORCING SHALL HAVE A MINIMUM YIELD STRENGTH OF 60,000 PSI AND BE PLACED IN THE UPPER HALF OF THE BASE WITH 1" MINIMUM CLEARANCE.
6. NO STEPS SHALL BE PLACED IN THE ADJUSTMENT SECTION.
7. ALL MANHOLES SHALL HAVE STEPS.
8. THE MANHOLE OPENING SHALL BE ORIENTED DIRECTLY OVER THE INVERT OF THE LARGEST INLET PIPE.
9. USE A-LOK, KOR-N-SEAL. INSERTA TEE, DURASEAL III, OR APPROVED MANHOLE ADAPTORS.

SCALE: NONE

48" DIAMETER MANHOLE

STANDARD PLAN No.
7-05-A

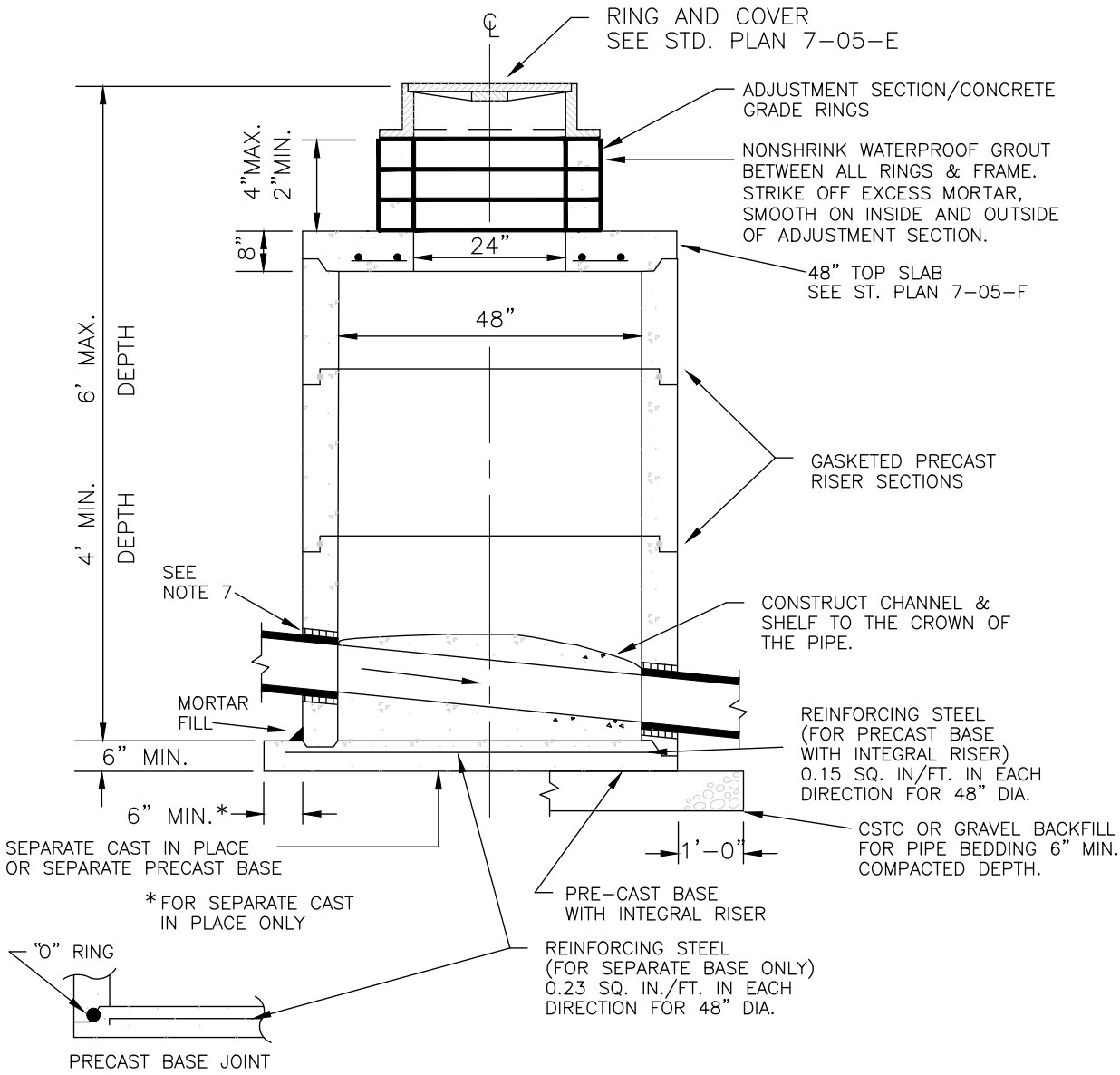

DESIGN ASSUMPTIONS

HEIGHT: 5.33' TO 8': SOIL BEARING VALUE EQUALS 3300 #/FT^2 (MIN)

NOTES

1. MANHOLES TO BE CONSTRUCTED IN ACCORDANCE WITH AASHTO M-199 (ASTM C 478) UNLESS OTHERWISE SHOWN ON PLANS OR NOTED IN THE STANDARD SPECIFICATIONS, AND IN ACCORDANCE WITH CURRENT WSDOT/ APWA STANDARD SPECIFICATIONS.
2. ALL REINFORCED CAST IN PLACE CONCRETE SHALL BE CLASS 4000. NON-REINFORCED CONCRETE IN CHANNEL AND SHELF SHALL BE CLASS 3000. ALL PRECAST CONCRETE SHALL BE CLASS 4000.
3. PRECAST BASES SHALL BE FURNISHED WITH CUTOUTS OR KNOCKOUTS. KNOCKOUTS SHALL HAVE A WALL THICKNESS OF 2" MINIMUM.
4. KNOCKOUT OR CUTOUT HOLE SIZE IS EQUAL TO PIPE OUTER DIAMETER PLUS MANHOLE WALL THICKNESS. MAXIMUM PIPE SIZE IS 21" FOR 48" MANHOLE. (MAX. PIPE SIZE MAY BE LIMITED BY PIPE CONFIGURATION.) MINIMUM DISTANCE BETWEEN HOLES IS 8".
5. ALL BASE REINFORCING SHALL HAVE A MINIMUM YIELD STRENGTH OF 60,000 PSI AND BE PLACED IN THE UPPER HALF OF THE BASE WITH 1" MINIMUM CLEARANCE.
6. NO STEPS SHALL BE PLACED.
7. USE A-LOK, KOR-N-SEAL, INSERTA TEE, DURASEAL III, OR APPROVED EQUAL MANHOLE ADAPTORS.

SCALE: NONE

48" DIAMETER SHALLOW MANHOLE

STANDARD PLAN No.
7-05-C

SCALE: NONE

MANHOLE RING AND COVER

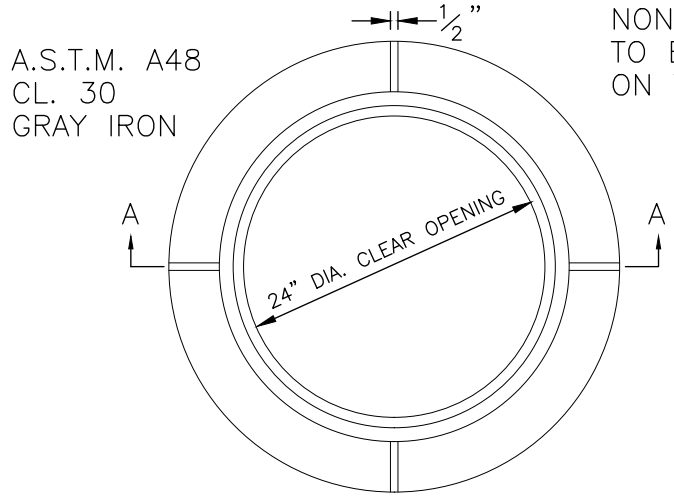

CAST IRON FRAME
MIN. WEIGHT 168 LBS.

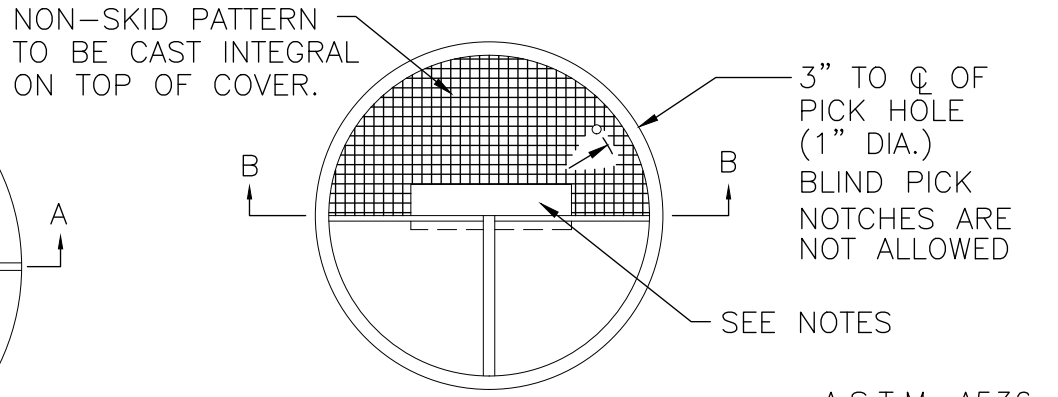

A.S.T.M. A536
CL. 80-55-06
DUCTILE IRON

DUCTILE IRON COVER
MIN. WEIGHT 118 LBS.

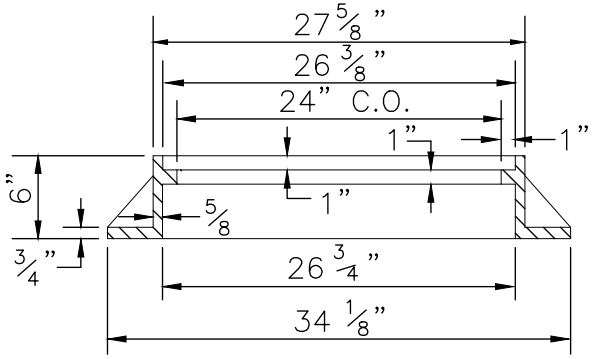

SECTION A-A

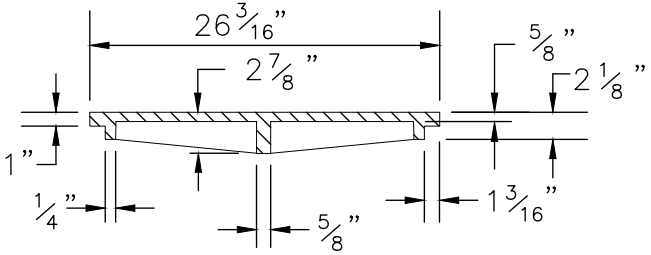

SECTION B-B

NOTES:

1. THE WORD "SEWER" SHALL BE EMBOSSED ON EACH MANHOLE COVER WITH 3/16" RAISED LETTERS.
2. MANHOLE RINGS AND COVERS SHALL BE IN ACCORDANCE WITH STANDARD SPECIFICATIONS AND MEET THE STRENGTH REQUIREMENTS OF FEDERAL SPECIFICATION RR-F-621E.
3. MATING SURFACES SHALL BE FINISHED TO ASSURE NON-ROCKING FIT WITH ANY COVER POSITION.

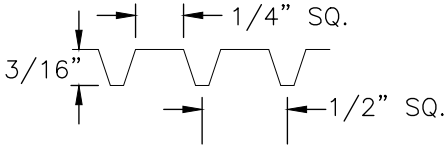

COVER SKID DESIGN DETAIL

STANDARD PLAN No. 7-05-E

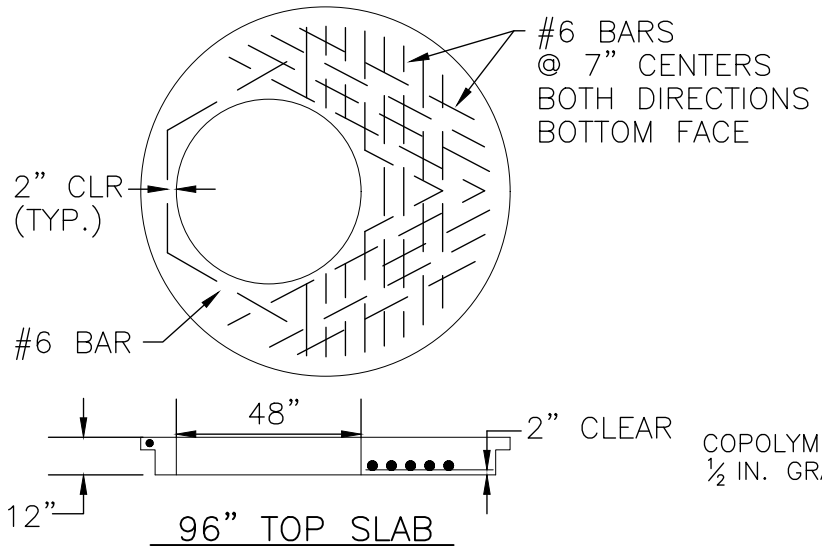

96" TOP SLAB

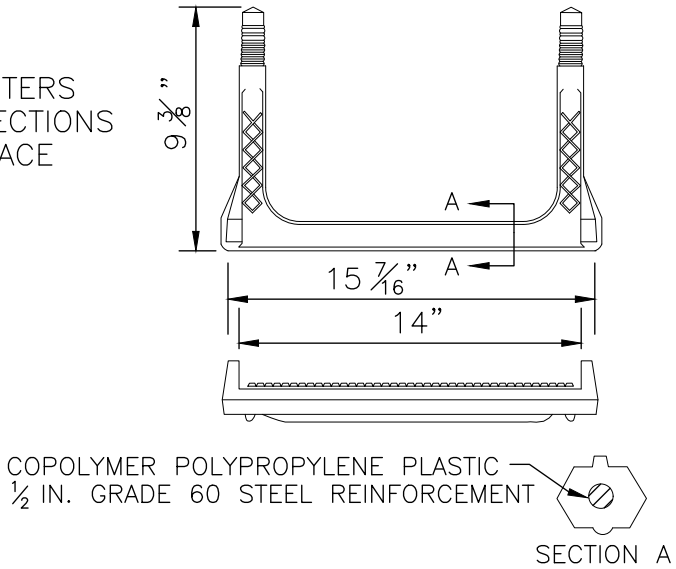

MANHOLE STEP

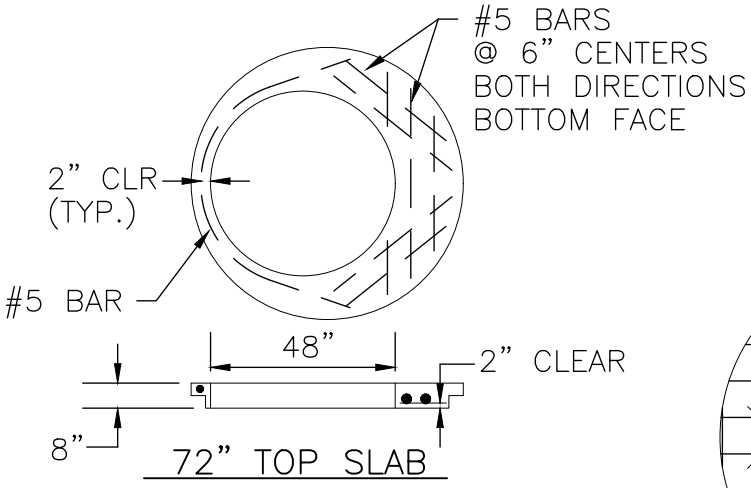

72" TOP SLAB

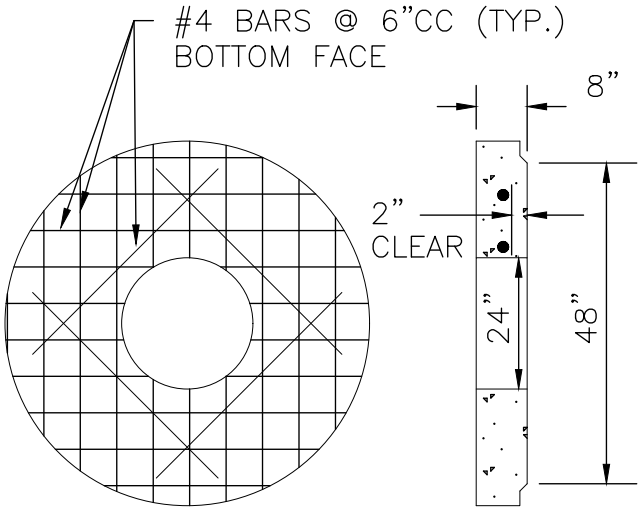

48" TOP SLAB

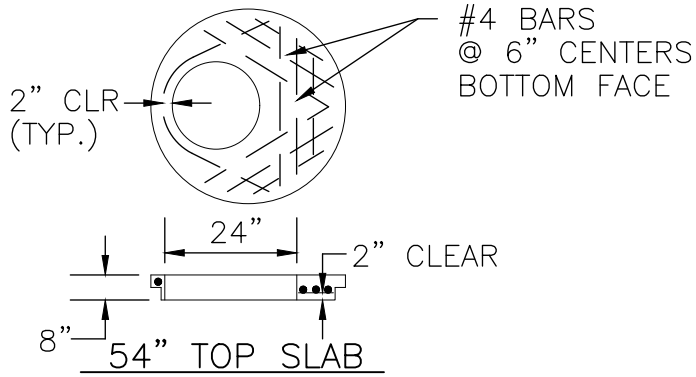

54" TOP SLAB

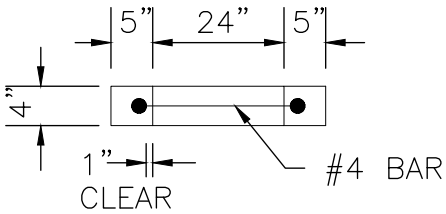

GRADE RING

SCALE: NONE

REDUCING SLABS AND MANHOLE STEPS

STANDARD PLAN No.
7-05-F

NOTES:

1. COMPACTION OF BACKFILL SHALL CONFORM TO SECTION 7-08:3(3).

2. THIS DETAIL IS TYPICAL FOR ALL SEWER LINES.

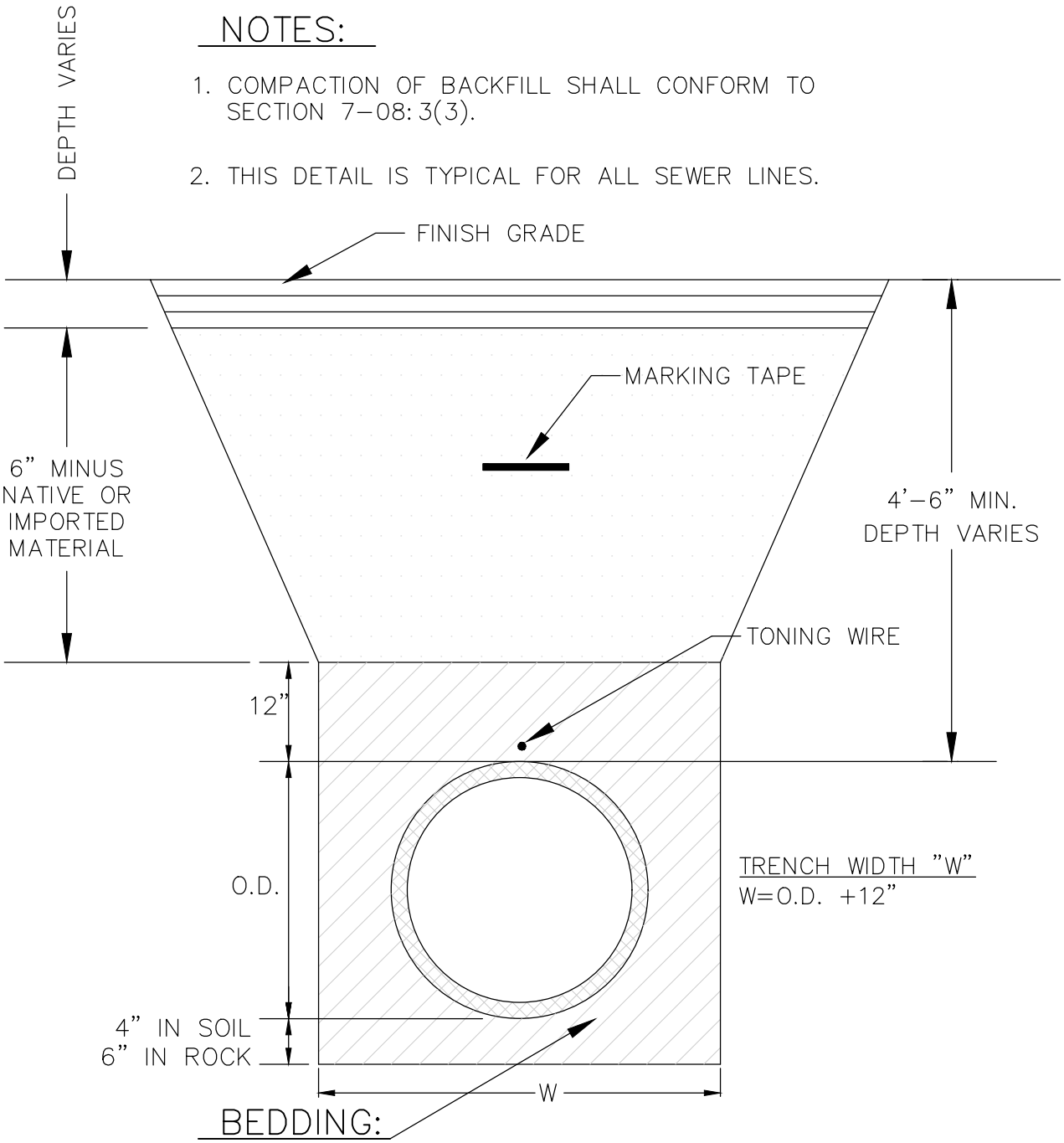

BEDDING:

SEWERLINES: BEDDING OF SEWER MAINS SHALL BE IN ACCORDANCE WITH SECTION 7-08.3(1)C

SCALE: NONE

ADOPTED:

UTILITY TRENCH

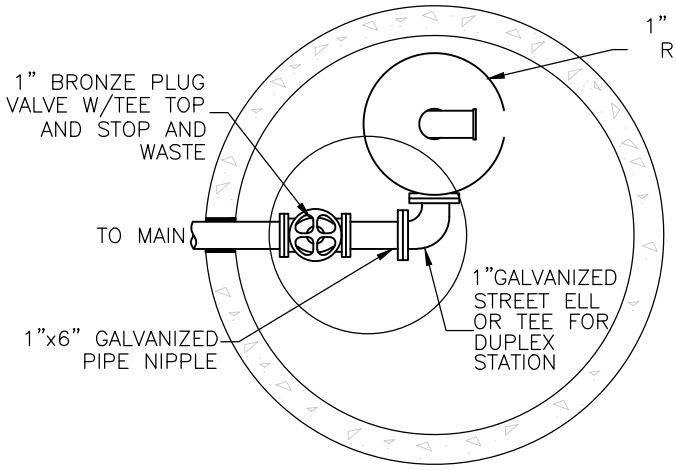

PLAN DETAIL

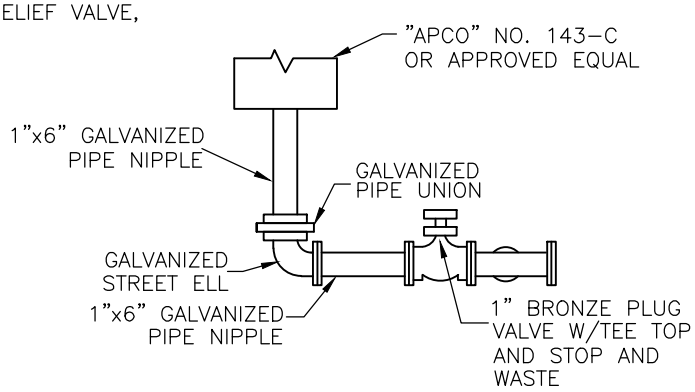

ELEVATION DETAIL

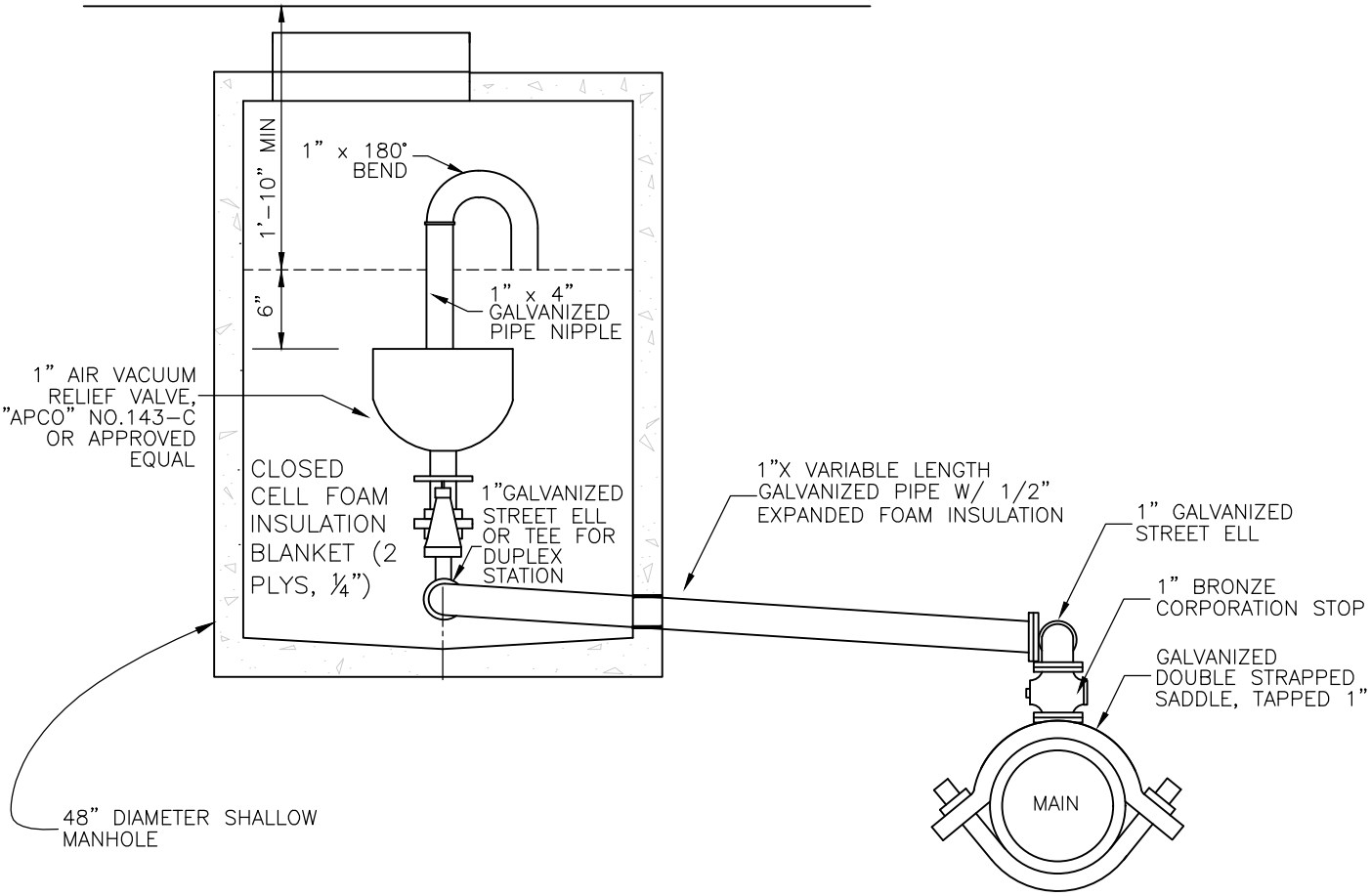

SCALE: NONE

ADOPTED: MARCH 2008

AIR RELEASE/VACUUM RELIEF STATION

PART 9

CONTRACT DRAWINGS

WW COLLECTION SYSTEM & WWTF IMPROVEMENTS PROJECT

MARCH 2021

VICINITY MAP

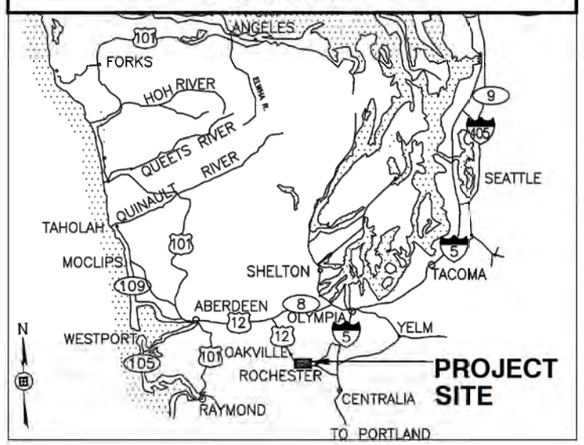

LOCATION MAP

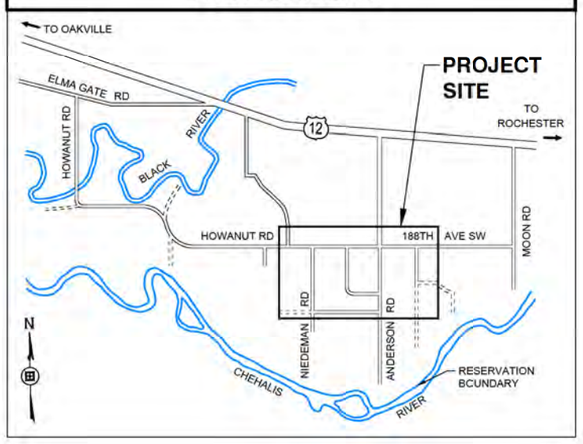

SHEET INDEX

SHT #	DWG #	DESCRIPTION
1	-	COVER SHEET
2	-	SITE PLAN & LEGEND
3	-	COMMUNITY SYSTEM SCHEMATIC
4	-	WELLNESS CENTER FORCE MAINS
5	-	PLAN/PROFILE STA 5+00 TO 10+00
6	-	PLAN/PROFILE STA 10+00 TO 14+00
7	-	PLAN/PROFILE STA 14+00 TO 18+00
8	-	PLAN/PROFILE STA 18+00 TO 22+00
9	-	PLAN/PROFILE STA 22+00 TO 26+00
10	-	PLAN/PROFILE STA 26+00 TO 30+00
11	-	PLAN/PROFILE STA 30+00 TO 34+00
12	-	PLAN/PROFILE STA 34+00 TO 38+00
13	-	PLAN/PROFILE STA 38+00 TO 42+00
14	-	PLAN/PROFILE STA 42+00 TO 46+00
15	-	PLAN/PROFILE STA 46+00 TO 50+00
16	-	PLAN/PROFILE STA 50+00 TO 54+00
17	-	PLAN/PROFILE STA 54+00 TO 55+64
18	-	PLAN/PROFILE STA 1+00 TO 5+00
19	-	PLAN/PROFILE STA 5+00 TO 9+00
20	-	PLAN/PROFILE STA 9+00 TO 10+44
21	-	NON-RESIDENTIAL PUMP STATION PLAN
22	-	NON-RESIDENTIAL PUMP STATIONS PLAN
23	-	MAKUM LANE PUMP STATIONS PLAN
24	-	WELLNESS CENTER PUMP STATION
25	-	WELLNESS CENTER MBR DEMOLITION
26	-	PS #2 WETWELL REHABILITATION
27	-	SIMPLEX EFFLUENT PUMP DETAILS
28	-	SIMPLEX EFFLUENT PUMP DETAILS
29	-	WWTF SITE PIPING DIAGRAM
29A	-	WWTF SITE PIPING NOTES & DETAILS
30	-	INTERIOR PIPING
31	-	INTERIOR EQUIPMENT DETAILS
32	-	VALVE VAULT DETAILS
33	-	PLANT DRAIN PUMP STATION DETAILS
34	-	PROCESS INSTRUMENTATION LEGEND AND CODES
35	-	PROCESS AND INSTRUMENTATION DIAGRAM

SHEET INDEX

SHT #	DWG #	DESCRIPTION
36	-	ELECTRICAL LEGEND
37	-	ELECTRICAL AREA PLAN
38	-	WWTP SITE PLAN
39	-	FILTER BUILDING ELECTRICAL PLAN
40	-	PLANT DRAIN PUMP & VALVE VAULT ELECTRICAL
41	-	WELLNESS, TAHOWN & PS #2 ELECTRICAL
42	-	FILTER BUILDING ONE-LINE DIAGRAM
43	-	AERATION BLOWER WIRING DIAGRAM
44	-	NETWORK WIRING DIAGRAM
45	-	LCP ELEVATION
46	-	LCP WIRING DIAGRAM
47	-	LCP I/O DIAGRAM
48	-	LCP I/O DIAGRAM
49	-	LCP I/O DIAGRAM
50	-	LCP I/O DIAGRAM
51	-	WWTP INSTRUMENT/ELECTRICAL DETAILS
52	-	ELECTRICAL DETAILS
53	-	ELECTRICAL CONDUIT & WIRE SCHEDULE
54	-	TYPICAL SIMPLEX PUMP STATION ELECTRICAL DETAILS

FUNDED IN PART BY:

DEPARTMENT OF ECOLOGY State of Washington

SRF#: WQC-2020-COTCIR-00045

811 Know what's below. Call before you dig.

Digitally signed by Ron Weigel
Date: 2021.03.12 07:06:15-08'00'

RON C. WEIGEL
STATE OF WASHINGTON
28,402
REGISTERED
PROFESSIONAL ENGINEER

SHEET 1 OF -

WW COLLECTION SYSTEM & WWTF IMPROVEMENTS PROJECT
COVER SHEET
MARCH 2021

THE CHEHALIS TRIBE

CENTURY WEST ENGINEERING
5500 MEADOWS RD, #250 | LAKE OSWEGO, OR 97035
WWW.CENTURYWEST.COM | 503.419.2130

DESIGNED: R. WEIGEL
DRAWN: S. KELLEY
CHECKED: R. VOORHIES
CWE PROJECT NO. 41445001.01

SCALE
PLAN N.T.S.
HORIZ.
PROFILE VERT.
ONE INCH (REF)

NO.	DATE	REVISION	BY	APRVD.

FILE: Y:\Projects\Chehalis Tribe\STEP - WWTP Project\CAD_WORKING\ Sits 1-2.dwg 03/12/2021 - 7:02am

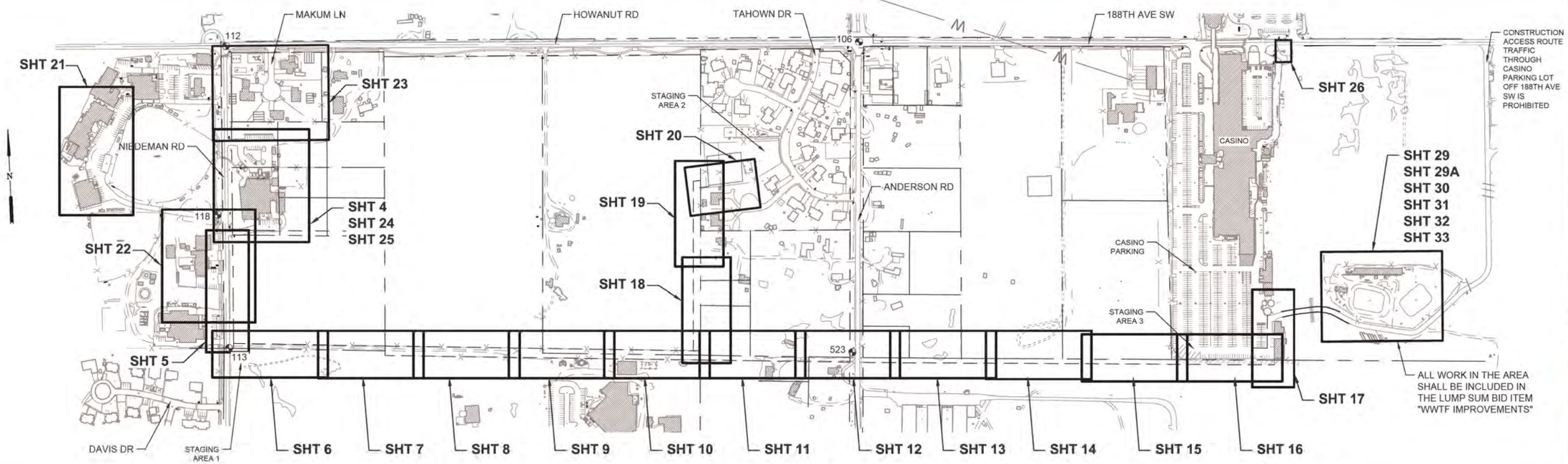

SITE PLAN

LEGEND

PROPOSED		EXISTING
	WATER LINE	W
	WATER LINE - UNABLE TO MARK DURING DESIGN	W
	STORM DRAIN LINE	STS
SS	SANITARY SEWER (GRAVITY LINE)	SS
FM	SANITARY SEWER (FORCE MAIN)	FM
	FLOW DIRECTION	
	UNDERGROUND POWER LINE	E
	PURPLE PVC PIPE (NON-POTABLE WATER)	IRR
	GAS LINE	G
	UNDERGROUND COM LINE	FO
	FENCE	X
	EDGE OF GRAVEL	
	EDGE OF ASPHALT	
	FIRE HYDRANT	
	SEPTIC TANK LID	
	STORM CATCH BASIN	
	SIGN	
	LIGHT POLE	
	ELECTRICAL METER	EM
	MONUMENT	
	TREE	
	LANDSCAPE/HEDGE	
	CONCRETE CURB	
	LIMITS OF CONSTRUCTION STAGING	
	BUILDING	

MISCELLANEOUS POINTS

SHEET	NORTHING	EASTING	STRUCTURE/REMARK
4	551045.41	971949.38	STA 3+29±, CONNECT TO EXIST 3" FM
5	551020.10	971775.71	STA 5+14, 3" ELBOWS
5	550774.38	971765.18	STA 7+60, 3" PIPE
5	550546.52	971755.41	STA 9+88, 4" TEE
6	550532.60	971966.89	STA 12+00, 4" PIPE
7	550501.73	972435.96	STA 16+70, 4" 45° ELBOW
7	550492.42	972443.17	STA 16+82, 4" 45° ELBOW
8	550470.69	972760.57	STA 20+00, 4" PIPE
9	550449.08	973075.95	STA 23+16, 4" TEE - COMMUNITY CENTER PS
10	550406.79	973693.47	STA 29+35, 4" 22-1/2° ELBOW
10	550394.22	973717.42	STA 29+62, 4" 22-1/2° ELBOW
10/18	550394.00	973720.80	STA 29+66, 4" TEE - TAHOWN PS
11	550369.52	974094.48	STA 33+40, 4" PIPE
12	550353.49	974339.18	STA 35+85, DEFLECTION POINT
12	550354.06	974405.14	STA 36+52, DEFLECTION POINT
13	550334.97	974733.40	STA 39+80, 4" PIPE
13	550325.68	974893.13	STA 41+40, 1" AIR RELIEF VALVE
14	550304.79	975252.52	STA 45+00, 4" PIPE
15	550281.57	975651.84	STA 49+00, 4" PIPE
16	550254.67	976114.37	STA 53+63, 4" 90° ELBOW
17	550431.11	976123.73	STA 55+40, 4" 45° ELBOW
17	550468.94	976165.79	STA 55+97±, CONNECT TO EXIST 6" FM
18	550493.86	973726.07	STA 2+00, 2" PIPE
19	551106.48	973758.40	STA 8+13, 2" 90° ELBOW

MISCELLANEOUS POINTS

SHEET	NORTHING	EASTING	STRUCTURE/REMARK
20	551120.19	973959.05	STA 10+15, 2" 90° ELBOW
20	551158.82	973956.41	STA 10+53±, CONNECT TO EXIST TAHOWN PS VAULT
21	551193.02	971340.22	CONNECTION PNT FROM YOUTH CENTER INTO EX 1-1/2" FM (±)
22	551136.74	971546.75	CONNECTION PNT FROM SMOKEHOUSE INTO EX 1-1/2" FM (±)
22	551130.94	971578.36	CONNECTION PNT FROM NATURAL RESOURCES INTO EX 1-1/2" FM (±)
22	551113.85	971663.97	CONNECTION PNT FROM MAINTENANCE SHOP INTO EX 1-1/2" FM (±)
23	551469.72	972020.23	2" TEE
23	551478.60	971844.25	CONNECTION PNT FROM MAKUM #40 INTO NEW 2" FM (±)
23	551471.65	971982.00	CONNECTION PNT FROM MAKUM #43 INTO NEW 2" FM (±)
23	551465.02	972113.37	CONNECTION PNT FROM MAKUM #42 INTO NEW 2" FM (±)
23	551461.52	972182.87	CONNECTION PNT FROM MAKUM #38 INTO NEW 2" FM (±)
24	551207.30	972005.99	CENTER WETWELL - WELLNESS CENTER PUMP STATION

CONTROL POINTS

CP#	NORTHING	EASTING	ELEV.	REMARKS
106	51683.113	74458.967	120.694'	DISK
112	51803.162	71808.218	114.956'	DISK
113	50537.716	71755.455	117.393'	DISK
118	51099.550	71737.069	112.026'	MAG
523	50385.169	74363.572	121.165'	MON

GENERAL NOTES

1. OWNER HAS ATTEMPTED TO IDENTIFY SEVERAL TREES (12" DBH AND GREATER) TO BE REMOVED FROM STA 36+50 TO STA 53+50 ALONG ALIGNMENT. SIGNIFICANT UNDERBRUSH AND SCRUB TREES WILL ALSO BE REMOVED IN THIS AREA. A FEW ADDITIONAL LARGER TREES MAY BE PRESENT AND CONTRACTOR SHOULD BE PREPARED TO REMOVE ALSO.
2. APPROXIMATE LOCATIONS FOR POTENTIAL STAGING AREAS ARE SHOWN FOR CONTRACTOR USE. REFER TO BOUNDARIES SHOWN ON SHEETS 6, 16, AND 20. 6' TALL TEMPORARY CHAIN LINK FENCING WILL BE REQUIRED AT CONTRACTOR EXPENSE DURING USE OF THE AREAS.
3. ALL MATERIALS AND WORKMANSHIP SHALL BE IN ACCORDANCE WITH THE REQUIREMENTS OF THE MOST CURRENT EDITION OF THE STATE OF WASHINGTON, DEPARTMENT OF TRANSPORTATION STANDARD SPECIFICATIONS FOR ROAD AND BRIDGE CONSTRUCTION.
4. CONTRACTOR SHALL BE RESPONSIBLE TO CONTACT ALL UTILITY COMPANIES IN ORDER TO ASSURE THAT ALL LINES, PIPES, POLES, AND OTHER APPURTENANCES ARE PROPERLY LOCATED. THIS WILL ALSO INCLUDE UTILIZING A PRIVATE FOR HIRE UTILITY LOCATE COMPANY AT THE CONTRACTORS EXPENSE TO IDENTIFY UNDERGROUND POWER OR OTHER DETECTIBLE UTILITIES WITHIN THE WWTF.
5. BURIED UTILITIES ARE SHOWN IN THEIR APPROXIMATE LOCATION. CONTRACTOR IS RESPONSIBLE FOR CONFIRMATION ON THE GROUND PRIOR TO ANY CONSTRUCTION. THIS WILL REQUIRE POTHOLING TO VERIFY BOTH HORIZONTAL AND VERTICAL LOCATIONS IN RELATION TO THE NEW IMPROVEMENTS.
6. ONSITE EROSION CONTROL MEASURES SHALL BE THE RESPONSIBILITY OF THE CONTRACTOR, BE IN PLACE PRIOR TO CONSTRUCTION AND CONTINUALLY MAINTAINED OVER THE COURSE OF THE PROJECT.
7. PROVIDE MINIMUM 2 SQ. FT. CONCRETE THRUST BLOCKS ON ALL PRESSURE PIPE ELBOWS 3" AND 4" DIAMETER.

Digitally signed by Ron Weigel
Date: 2021.03.12 07:06:43-08'00'

RON C. WEIGEL
STATE OF WASHINGTON
28,402
REGISTERED
PROFESSIONAL ENGINEER

SHEET 2 OF -

WW COLLECTION SYSTEM & WWTF IMPROVEMENTS PROJECT
SITE PLAN & LEGEND
MARCH 2021

THE CHEHALIS TRIBE

CENTURY WEST ENGINEERING
5500 MEADOWS RD. #250 | LAKE OSWEGO, OR 97035
WWW.CENTURYWEST.COM | 503.419.2130

DESIGNED: R. WEIGEL
DRAWN: S. KELLEY
CHECKED: R. VOORHIES
CWE PROJECT NO. 41445001.01

SCALE
PLAN: N T S
PROFILE: HORIZ. / VERT.
ONE INCH (REF)

NO.	DATE	REVISION	BY	APRVD.

FILE: Y:\Projects\Chehalis Tribe\STEP - WWTP Project\CAD_WORKING\Site 1-2.dwg 03/08/2021 - 12:50pm

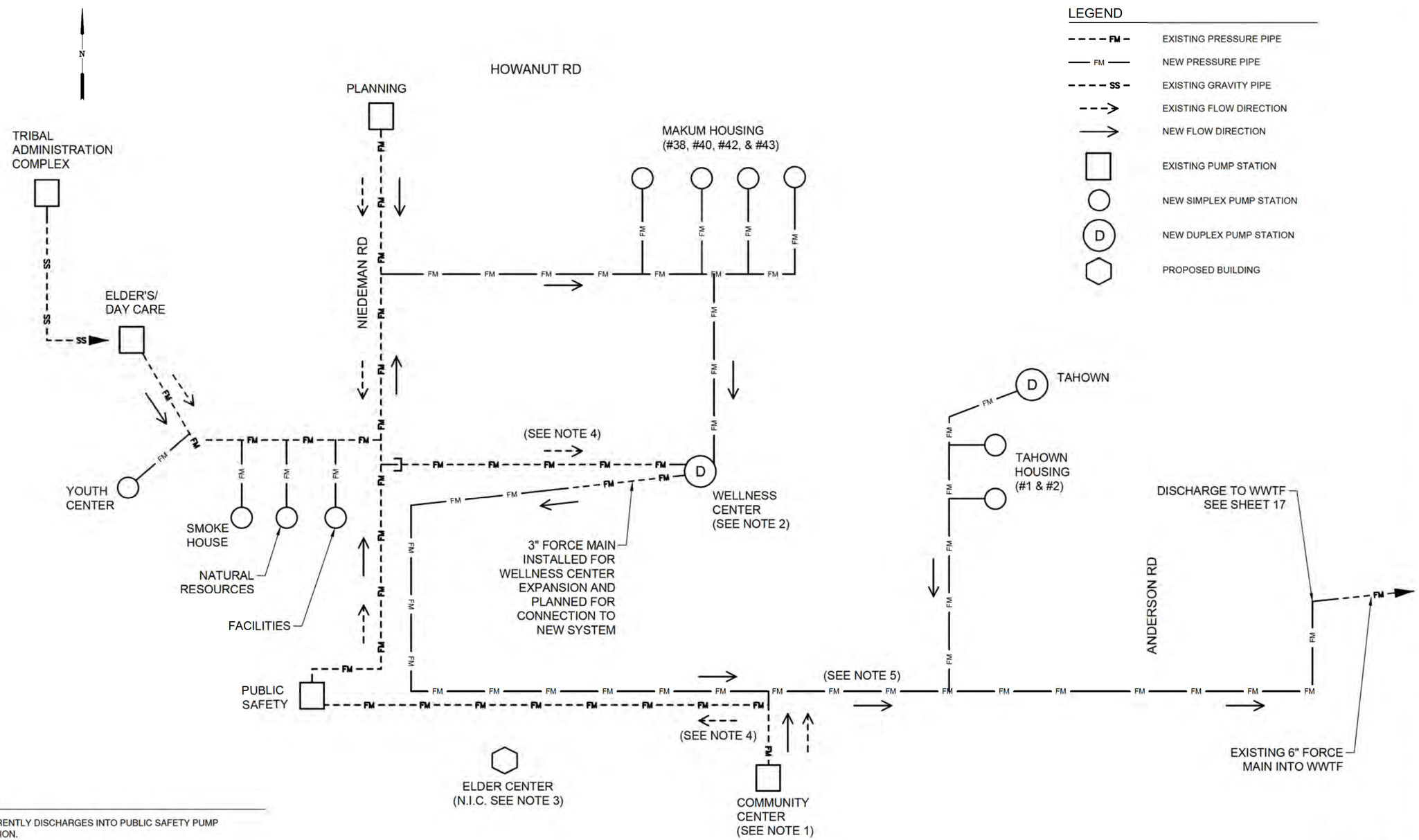

PUMP STATION DIAGRAM (1/3)

SCALE: N.T.S.

NOTES

1. CURRENTLY DISCHARGES INTO PUBLIC SAFETY PUMP STATION.
2. DEMO EXISTING MBR UNIT INSIDE BUILDING ADJACENT TO WELLNESS CENTER (NOT SHOWN). SEE SHEET 25.
3. NEW ELDER CENTER PUMP STATION TO BE CONSTRUCTED BY OTHERS AND SHALL CONNECT TO NEW FORCE MAIN DISCHARGING INTO WWTF.
4. ABANDON EXISTING 1-1/2" PVC FORCE MAIN THAT IS NO LONGER NECESSARY FOR NEW SYSTEM LAYOUT. SEE SHEET 4.
5. NEW FORCE MAIN TO WWTF IS LOCATED WITHIN EASEMENT VARYING IN WIDTH FROM 20' TO 40' AND CONSISTING OF GRAVEL ROADWAY AND VEGETATED AREAS REQUIRING SOME CLEARING FOR ACCESS.

Digitally signed by Ron Weigel
Date: 2021.03.12 07:07:05-08'00'

RON C. WEIGEL
STATE OF WASHINGTON
28,402
REGISTERED
PROFESSIONAL ENGINEER

SHEET 3 OF -

WW COLLECTION SYSTEM & WWTF IMPROVEMENTS PROJECT
COMMUNITY SYSTEM SCHEMATIC
MARCH 2021

THE CHEHALIS TRIBE

CENTURY WEST ENGINEERING
5500 MEADOWS RD, #250 | LAKE OSWEGO, OR 97035
WWW.CENTURYWEST.COM | 503.419.2130

DESIGNED: R. WEIGEL
DRAWN: S. KELLEY
CHECKED: R. VOORHIES
CWE PROJECT NO. 41445001.01

SCALE
PLAN 1" =40'
PROFILE HORIZ. 1" =40' VERT. 1" =5'
ONE INCH (REF)

NO.	DATE	REVISION	BY	APRVD.

FILE: Y:\Projects\Chehalis Tribe\STEP - WWTP Project\CAD_WORKING Sht's 3-17.dwg 03/08/2021 - 8:04am

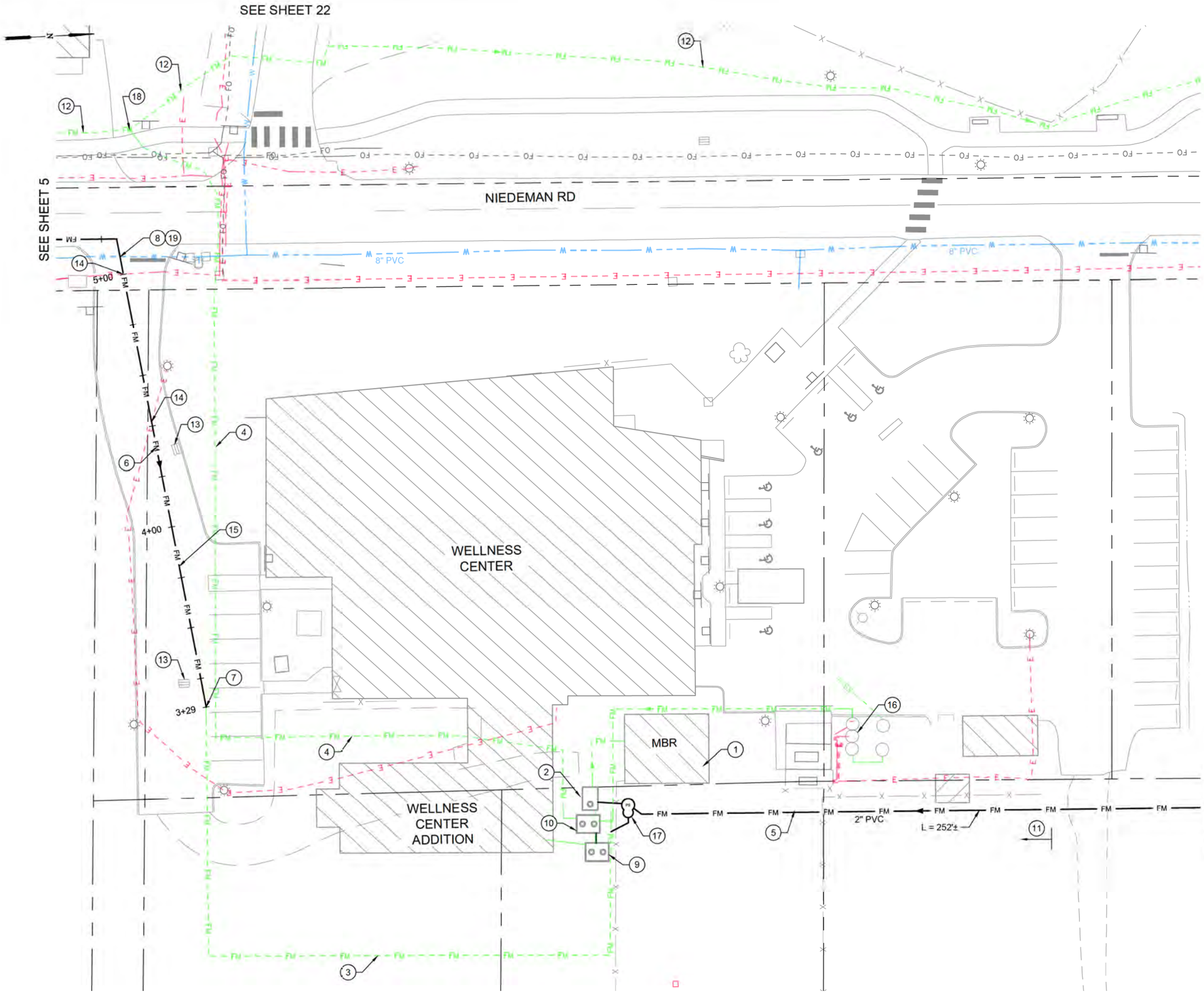

PLAN

CONSTRUCTION NOTES

1. SEE SHEET 25 FOR DEMO INSTRUCTIONS OF MBR UNIT INSIDE BUILDING.
2. REMOVE EXISTING PUMPS INSIDE FLOW EQUALIZATION TANK #2 AND INSTALL NEW 12" PIPE ON NORTH WALL TO CONNECT WITH NEW PUMP STATION WETWELL.
3. EXISTING 3" PVC EFFLUENT PIPE.
4. ABANDON EXISTING 1-1/2" PVC EFFLUENT PIPE.
5. INSTALL NEW 2" PVC EFFLUENT FORCE MAIN INTO NEW WELLNESS CENTER PUMP STATION WETWELL AT APPROXIMATE LOCATION SHOWN (SEE NOTE 2) EXTEND NORTHERLY TO MAKUM LANE.
6. INSTALL NEW 3" PVC FORCE MAIN WITH MINIMUM 3' COVER.
7. CONNECT TO EXISTING 3" PVC PIPE.
8. INSTALL 3" FORCE MAIN BENEATH EXISTING 8" PVC WATER MAIN LOCATED INSIDE 12" STEEL CASING ACROSS DRIVEWAY TO WELLNESS CENTER. PROVIDE MINIMUM 6" VERTICAL SEPARATION BETWEEN PIPES.
9. EXISTING 1,250 GALLON SEPTIC TANK SERVING NEW WELLNESS CENTER ADDITION. EFFLUENT IS PUMPED TO MBR WITH CONNECTION TO EXISTING 3" PVC PIPE. REDIRECT EXISTING 1-1/2" PVC DISCHARGE PIPE OUTSIDE SEPTIC TANK WITH NEW 1-1/2" PVC PIPE TO FLOW EQUALIZATION TANK #1. PROVIDE ALL PIPE AND FITTINGS NECESSARY TO INSTALL PIPE THROUGH WALL OF TANK. SEAL NEW OPENING WATERTIGHT WITH GROUT.
10. EXISTING FLOW EQUALIZATION TANK #1. CURRENTLY ALL FLOWS FROM WELLNESS CENTER, TINY HOUSES, AND SERVICES WEST OF NIEDEMAN ROAD ENTER THIS FACILITY.
11. NEW 2" FORCE MAIN WILL TRAVEL THROUGH EXISTING MBR DRAIN FIELD IN THIS AREA.
12. EXISTING 1-1/2" PVC EFFLUENT PIPE REMAINS IN SERVICE.
13. LOCATION OF CATCH BASIN PIPING IS NOT KNOWN. PROTECT DURING INSTALLATION OF NEW FORCE MAIN TO NIEDEMAN ROAD.
14. POTHOLE EXISTING UTILITY.
15. PROVIDE 3" THICK ASPHALT CONCRETE TRENCH PATCH WITH 12" TEE CUT ON EACH SIDE WITHIN WELLNESS CENTER DRIVEWAY.
16. EXISTING SEPTIC TANKS. EFFLUENT IS PUMPED TO FLOW EQUALIZATION BASIN #1.
17. NEW WELLNESS CENTER PUMP STATION. SEE TO SHEET 24 FOR DETAILS.
18. EXPOSE 1-1/2" PVC TEE. PROVIDE PERMANENT CAP ON PIPE THAT CROSSES NIEDEMAN ROAD. CAP SHALL BE LOCATED WITHIN 6" OF EXISTING TEE.
19. EXPOSE EXISTING 12" STEEL CASING FOR 8" PVC WATERLINE. INSTALL NEW 3" PVC WITH MINIMUM 1 FOOT CLEARANCE BELOW STEEL CASING.

SHEET NOTE

1. ALL NEW PIPE SHALL BE INSTALLED WITH 3' MINIMUM COVER DEPTH.

Digitally signed by Ron Weigel
Date: 2021.03.12 07:07:23-08'00'

RON C. WEIGEL
STATE OF WASHINGTON
28,402
REGISTERED
PROFESSIONAL ENGINEER

SHEET 4 OF -

WW COLLECTION SYSTEM & WWTF IMPROVEMENTS PROJECT
WELLNESS CENTER FORCE MAINS
MARCH 2021

THE CHEHALIS TRIBE

CENTURY WEST ENGINEERING
5500 MEADOWS RD. #250 | LAKE OSWEGO, OR 97035
WWW.CENTURYWEST.COM | 503.419.2130

DESIGNED: R. WEIGEL
DRAWN: S. KELLEY
CHECKED: R. VOORHIES
CWE PROJECT NO. 41445001.01

SCALE
PLAN 1" =40'
PROFILE HORIZ. 1" =40' VERT. 1" =5'
ONE INCH (REF)

NO.	DATE	REVISION	BY	APRVD.

FILE Y:\Projects\Chehalis Tribe\STEP - WWTP Project\CADD_WORKING\ Sht 3-17.dwg 03/10/2021 - 11:33am

CONSTRUCTION NOTES

1. ABANDON EXISTING 1-1/2" PVC PIPE AFTER NEW PIPE HAS BEEN PLACED IN SERVICE.
2. STA 5+17
   INSTALL 3" PVC 45° AND 22 1/2° ELBOWS
   DEFLECT SLIGHTLY AS NECESSARY
3. STA 9+88
   INSTALL 4" x 4" TEE WITH ISOLATION VALVE ON SOUTH LEG (CLOSED) FOR FUTURE EXTENSION. SEE DETAIL 1 THIS SHEET AND SHEET 27.
4. PROVIDE 4" THICK ASPHALT CONCRETE TRENCH PATCH WITH 12" WIDE TEE CUT ON EACH SIDE ALONG NIEDEMAN ROAD TO WELLNESS CENTER.
5. PLACE 4" THICK 1'-6" WIDE AGGREGATE BASE SHOULDER ROCK AFTER COMPLETION OF TRENCH PATCH ALONG NIEDEMAN ROAD.
6. INSTALL NEW 3" PVC FORCE MAIN.
7. TEMPORARY 2" PVC PIPE TO BE INSTALLED ON THE SURFACE WITHIN 20' EASEMENT FOR BYPASSING FLOWS PAST A SECTION OF THE BURIED PIPE FROM COMMUNITY CENTER PUMP STATION TO PUBLIC SAFETY PUMP STATION. CONNECT TO EXISTING BURIED LINE ON EAST SIDE OF NIEDEMAN ROAD WITH REQUIRED FITTINGS.
8. EXISTING 1-1/2" PVC EFFLUENT PIPE REMAINS IN SERVICE.
9. ABANDON EXISTING 1-1/2" PVC PIPE.
10. POTHOLE EXISTING UTILITY.
11. EXISTING 8" WATERLINE TEE WAS NOT LOCATED DURING DESIGN. FITTING HAS THREE VALVES.
12. VERIFY LOCATION OF 12" STEEL WATERLINE CASING TO INSTALL NEW 3" FORCE MAIN BELOW.
13. CONCRETE BLOCK 2 SQ. FT. BEARING.
14. 4" ISOLATION VALVE WITH PLUG
15. 3" FM WITH 4" x 3" ADAPTOR
16. 4" FM WITH 4" x 4" TEE AND 4" ISOLATION VALVE.
17. EXPOSE 8" WATERLINE AT APPROXIMATE STA 10+00 BEFORE INSTALLING PIPE IN THIS AREA. CONFIRM MINIMUM 1' CLEARANCE BETWEEN TOP OF FORCE MAIN AND BOTTOM OF 8" WATERLINE. ADJUST GRADE FROM STA 6+60 IF NECESSARY.

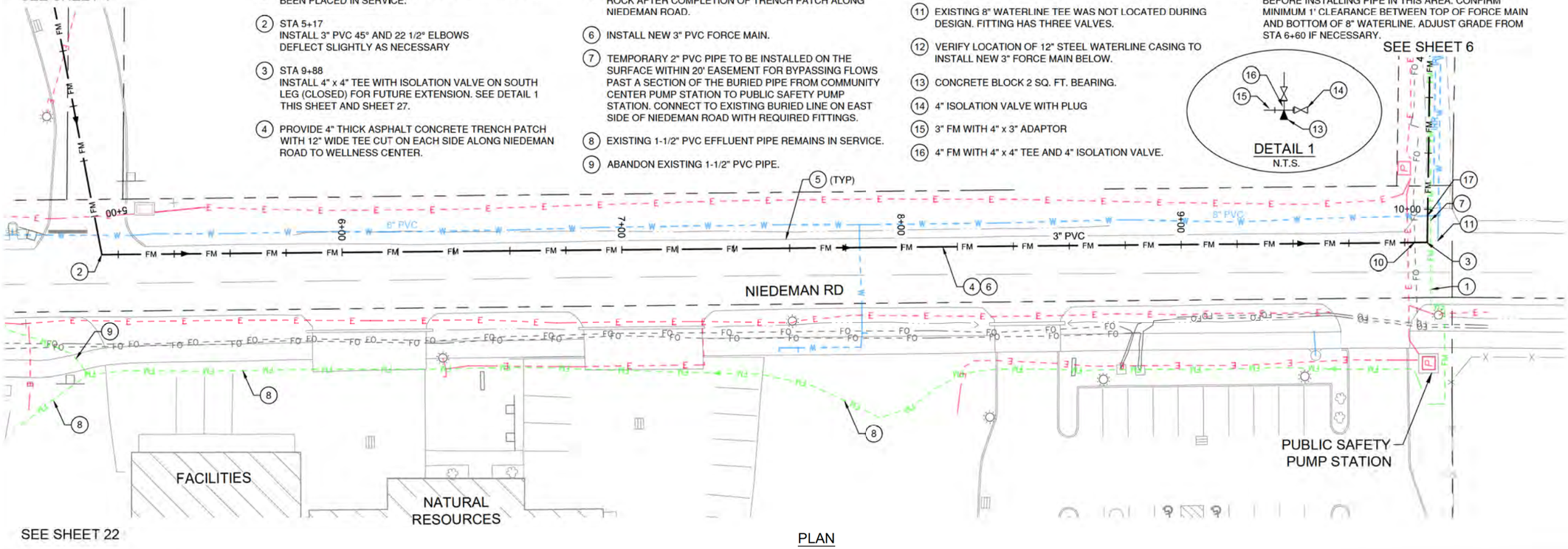

PLAN

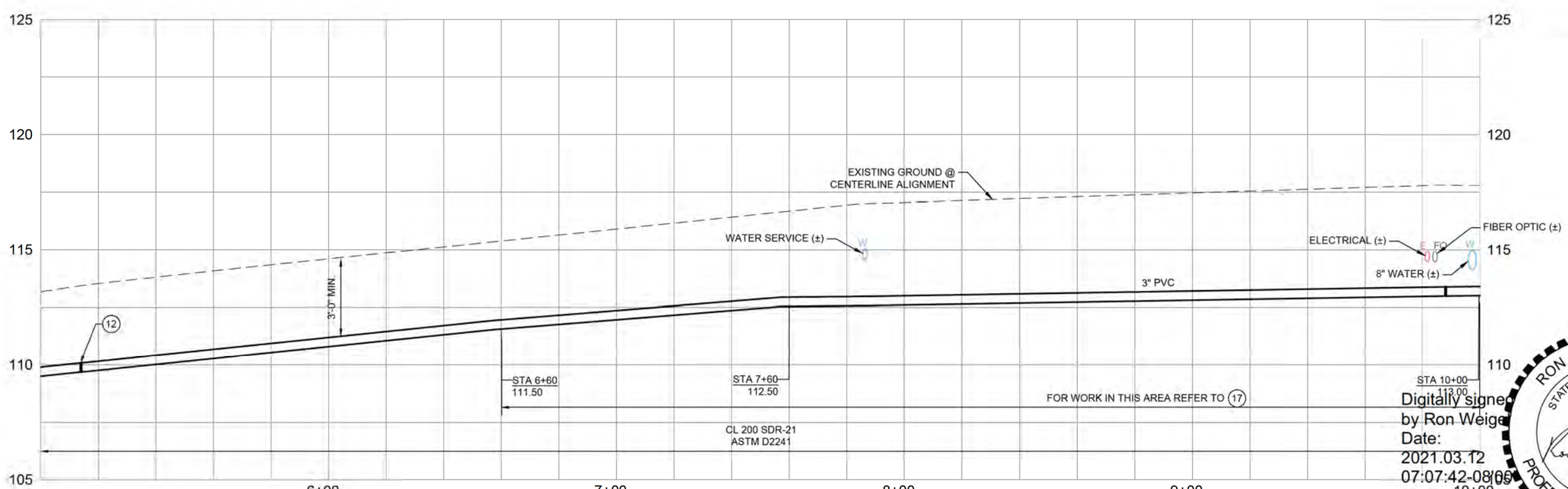

PROFILE

Digitally signed by Ron Weigel
Date: 2021.03.12 07:07:42-08'00'

RON C. WEIGEL
STATE OF WASHINGTON
28,402
REGISTERED
PROFESSIONAL ENGINEER

SHEET 5 OF -

WW COLLECTION SYSTEM & WWTF IMPROVEMENTS PROJECT
PLAN/PROFILE STA 5+00 TO 10+00
MARCH 2021

THE CHEHALIS TRIBE

CENTURY WEST ENGINEERING
5300 MEADOWS RD. #250 | LAKE OSWEGO, OR 97035
WWW.CENTURYWEST.COM | 503.419.2130

DESIGNED: R. WEIGEL
DRAWN: S. KELLEY
CHECKED: R. VOORHIES
CWE PROJECT NO. 41445001.01

SCALE
PLAN 1" =40'
PROFILE HORIZ. 1" =40' VERT. 1" =5'
ONE INCH (REF)

NO.	DATE	REVISION	BY	APRVD.

FILE: Y:\Projects\Chehalis Tribe\STEP - WWTP Project\CAD_WORKING\ Sht s 3-17.dwg 03/08/2021 - 12:24pm

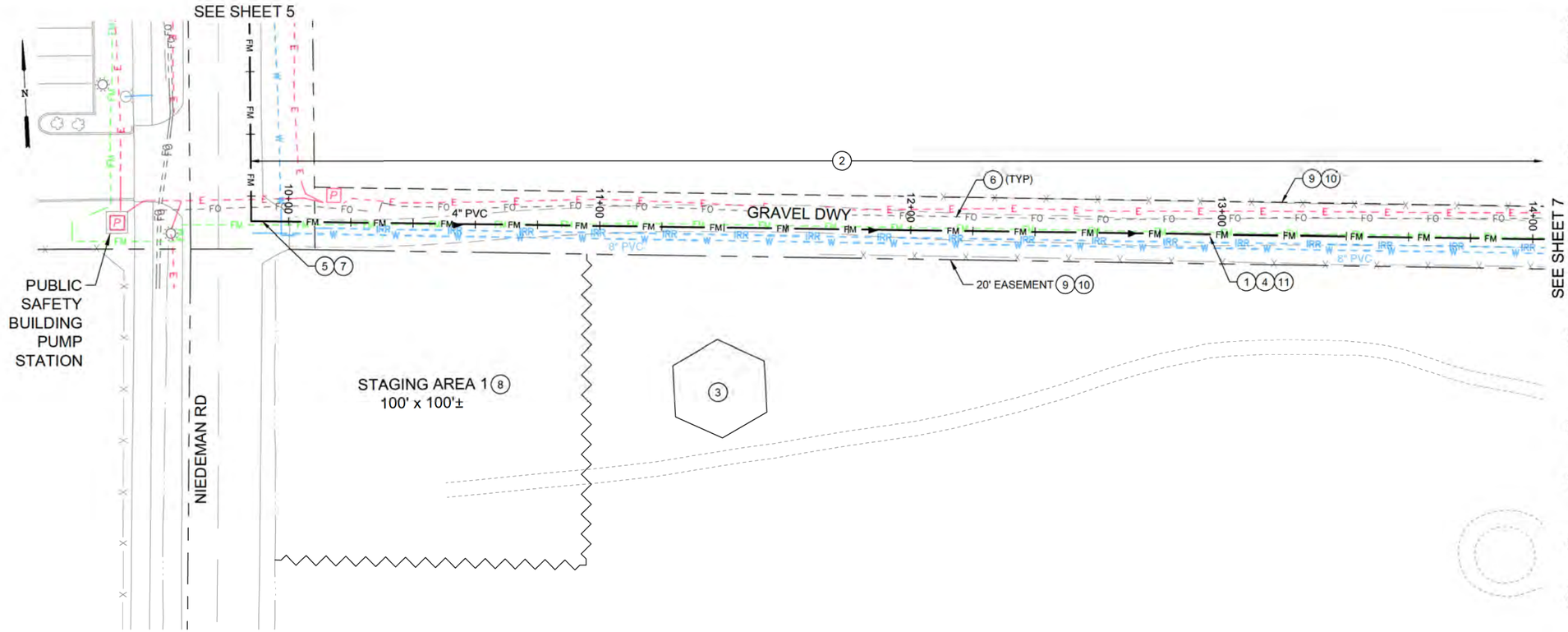

PLAN

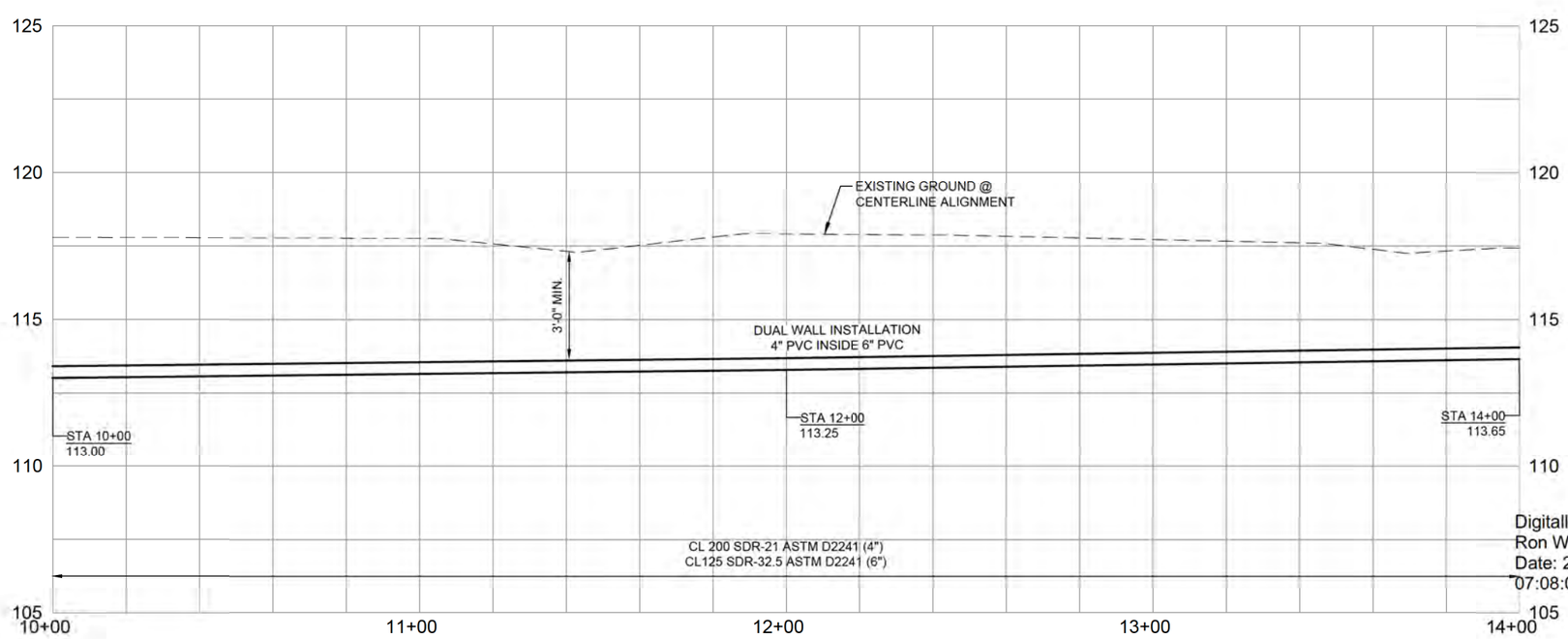

PROFILE

CONSTRUCTION NOTES

1. INSTALL NEW 4" PVC FORCE MAIN INSIDE 6" CLASS 125 PVC PIPE IN APPROXIMATELY SAME ALIGNMENT/TRENCH AS EXISTING 1-1/2" EFFLUENT PIPE FROM COMMUNITY CENTER PUMP STATION.
2. CONTINUE INSTALLATION OF TEMPORARY 2" PVC PIPE BYPASSING FLOWS FROM COMMUNITY CENTER PUMP STATION. REMOVE THIS TEMPORARY PIPE UPON COMPLETION OF PROJECT (PIPE NOT SHOWN IN PLAN VIEW). LOCATION DETERMINED BY CONTRACTOR WITHIN 20' EASEMENT.
3. APPROXIMATE LOCATION NEW ELDER CENTER. NOT CONSTRUCTED UNDER THIS CONTRACT.
4. REMOVE EXISTING 1-1/2" PURPLE SCHEDULE 80 PVC PIPE LOCATED 1' ABOVE THE EXISTING EFFLUENT PIPING IF EXPOSED DURING INSTALLATION OF THE NEW PRESSURE MAIN.
5. INSTALL IN-LINE PIG PORT 3' DOWNSTREAM OF TEE. REFER TO DETAIL ON SHEET 27.
6. POTHOLE EXISTING FIBER OPTIC EVERY 100' +/- TO PREVENT DAMAGE DURING INSTALLATION OF NEW FORCE MAIN.
7. BEGIN INSTALLATION OF 4" PVC PIPE INSIDE 6" CLASS 125 PVC PIPE 3' EAST OF IN-LINE PIG PORT.
8. CONTRACTOR SHALL CLEAR AREA FOR USE. ALL TREES >12" DBH OR GREATER SHALL REMAIN.
9. ALL CONSTRUCTION ACTIVITIES TO REMAIN WITHIN EASEMENT. OWNER TO STAKE LIMITS OF WORK AREA FOR CONTRACTOR EVERY 100'
10. INSTALL EROSION CONTROL FENCING ALONG BOTH SIDES OF 20' EASEMENT.

Digitally signed by Ron Weigel
Date: 2021.03.12 07:08:04-08'00'

RON C. WEIGEL
STATE OF WASHINGTON
28,402
REGISTERED
PROFESSIONAL ENGINEER

SHEET 6 OF -

WW COLLECTION SYSTEM & WWTF IMPROVEMENTS PROJECT
PLAN/PROFILE STA 10+00 TO 14+00
MARCH 2021

THE CHEHALIS TRIBE

CENTURY WEST ENGINEERING
5500 MEADOWS RD, #250 | LAKE OSWEGO, OR 97035
WWW.CENTURYWEST.COM | 503.419.2130

DESIGNED: R. WEIGEL
DRAWN: S. KELLEY
CHECKED: R. VOORHIES
CWE PROJECT NO. 41445001.01

SCALE
PLAN 1" =40'
PROFILE HORIZ. 1" =40' VERT. 1" =5'
ONE INCH (REF)

NO.	DATE	REVISION	BY	APRV'D

FILE: Y:\Projects\Chehalis Tribe\STEP - WWTP Project\CADD_WORKING\ Sht 3-17.dwg 03/05/2021 - 9:11am

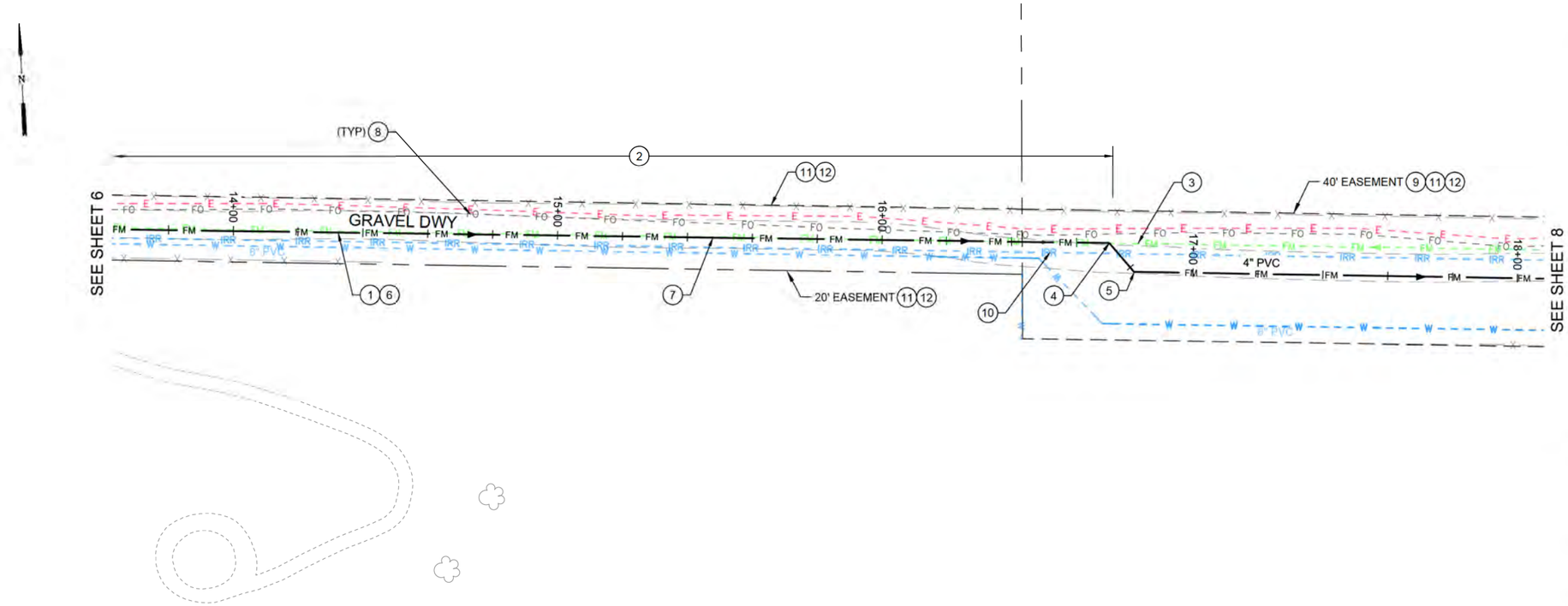

PLAN

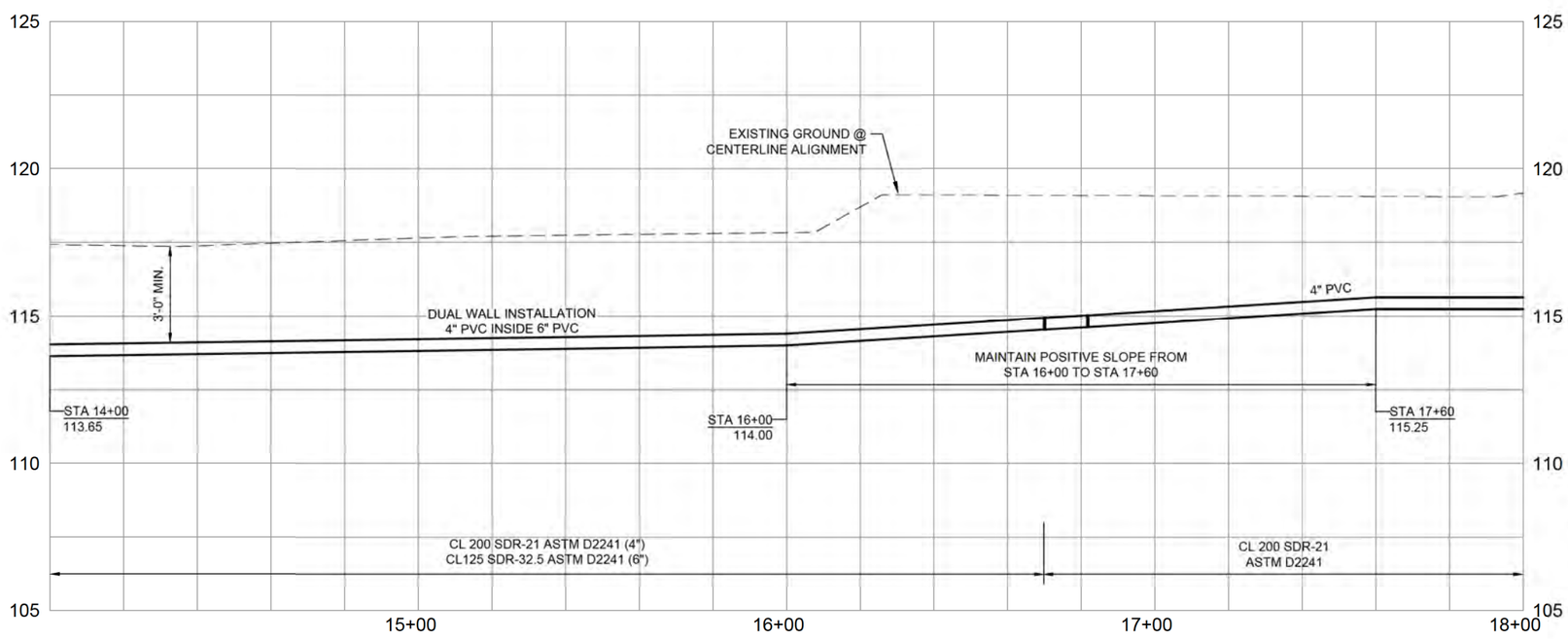

PROFILE

CONSTRUCTION NOTES

1. INSTALL NEW 4" PVC FORCE MAIN INSIDE 6" CLASS 125 PVC PIPE IN APPROXIMATELY SAME ALIGNMENT/TRENCH AS EXISTING 1-1/2" PIPE. EFFLUENT PIPE FROM COMMUNITY CENTER PUMP STATION.
2. CONTINUE INSTALLATION OF TEMPORARY 2" PVC PIPE BYPASSING FLOWS THROUGH THIS SECTION OF BURIED PIPE FROM COMMUNITY CENTER PUMP STATION. REMOVE THIS TEMPORARY PIPE UPON COMPLETION OF PROJECT (PIPE NOT SHOWN IN PLAN VIEW). LOCATION DETERMINED BY CONTRACTOR WITHIN 20' EASEMENT.
3. PROVIDE ALL FITTINGS NECESSARY TO CONNECT TEMPORARY 2" PVC PIPE INSTALLED ON GROUND SURFACE TO EXISTING BURIED 2" PVC EFFLUENT PIPE FROM COMMUNITY CENTER PUMP STATION. ABANDON SECTION OF EXISTING LINE AFTER CHANGEOVER TO NEW 4" PIPE SHOWN IN PROFILE.
4. STA 16+70
   INSTALL 4" - 45° ELBOW
5. STA 16+82
   INSTALL 4" - 45° ELBOW
6. REMOVE EXISTING 1-1/2" PURPLE SCHEDULE 80 PVC PIPE LOCATED 1' ABOVE THE EXISTING EFFLUENT PIPING TO APPROXIMATE STA 16+72 IF EXPOSED DURING INTALLATION OF THE NEW PRESSURE MAIN.
7. END INSTALLATION OF 4" PVC PIPE INSIDE 6" CLASS 125 PVC PIPE 3' WEST OF ELBOW.
8. POTHOLE EXISTING FIBER OPTIC EVERY 100' +/- TO PREVENT DAMAGE DURING INSTALLATION OF NEW FORCE MAIN.
9. CONTRACTOR IS RESPONSIBLE FOR STAKING 40' EASEMENT LIMITS/WORK AREA.
10. PROTECT EXISTING WATERLINE AIR RELIEF VALVE (NOT SHOWN) DURING INSTALLATION. MODIFY ALIGNMENT IF NECESSARY TO MISS THE VAULT.
11. ALL CONSTRUCTION ACTIVITY TO REMAIN WITHIN EASEMENT. OWNER TO STAGE LIMITS OF WORK AREA FOR CONTRACTOR EVERY 100' WITHIN 20' EASEMENT.
12. INSTALL EROSION CONTROL FENCING ALONG BOTH SIDE OF 20' AND 40' EASEMENTS.

Digitally signed by Ron Weigel
Date: 2021.03.12 07:08:22-08'00'

RON C. WEIGEL
STATE OF WASHINGTON
28,402
REGISTERED
PROFESSIONAL ENGINEER

SHEET 7 OF -

WW COLLECTION SYSTEM & WWTF IMPROVEMENTS PROJECT
PLAN/PROFILE STA 14+00 TO 18+00
MARCH 2021

THE CHEHALIS TRIBE

CENTURY WEST ENGINEERING
5500 MEADOWS RD. #250 | LAKE OSWEGO, OR 97035
WWW.CENTURYWEST.COM | 503.419.2130

DESIGNED: R. WEIGEL
DRAWN: S. KELLEY
CHECKED: R. VOORHIES
CWE PROJECT NO. 41445001.01

SCALE
PLAN 1" =40'
PROFILE HORIZ. 1" =40' VERT. 1" =5'
ONE INCH (REF)

NO.	DATE	REVISION	BY	APRV'D

FILE Y:\Projects\Chehalis Tribe\STEP - WWTP Project\CADD_WORKING\ Sht 3-17.dwg 02/08/2021 - 9:11am

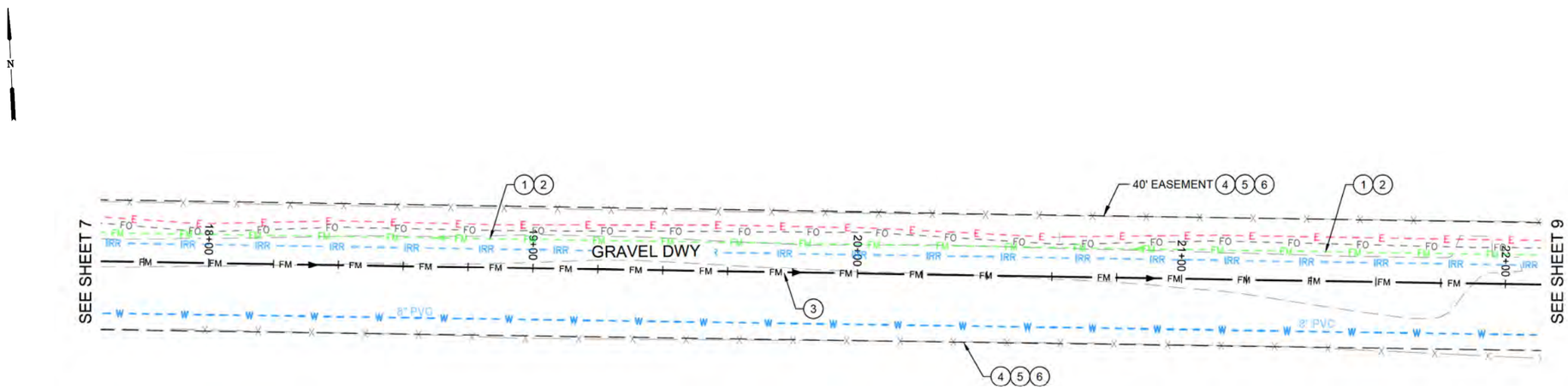

PLAN

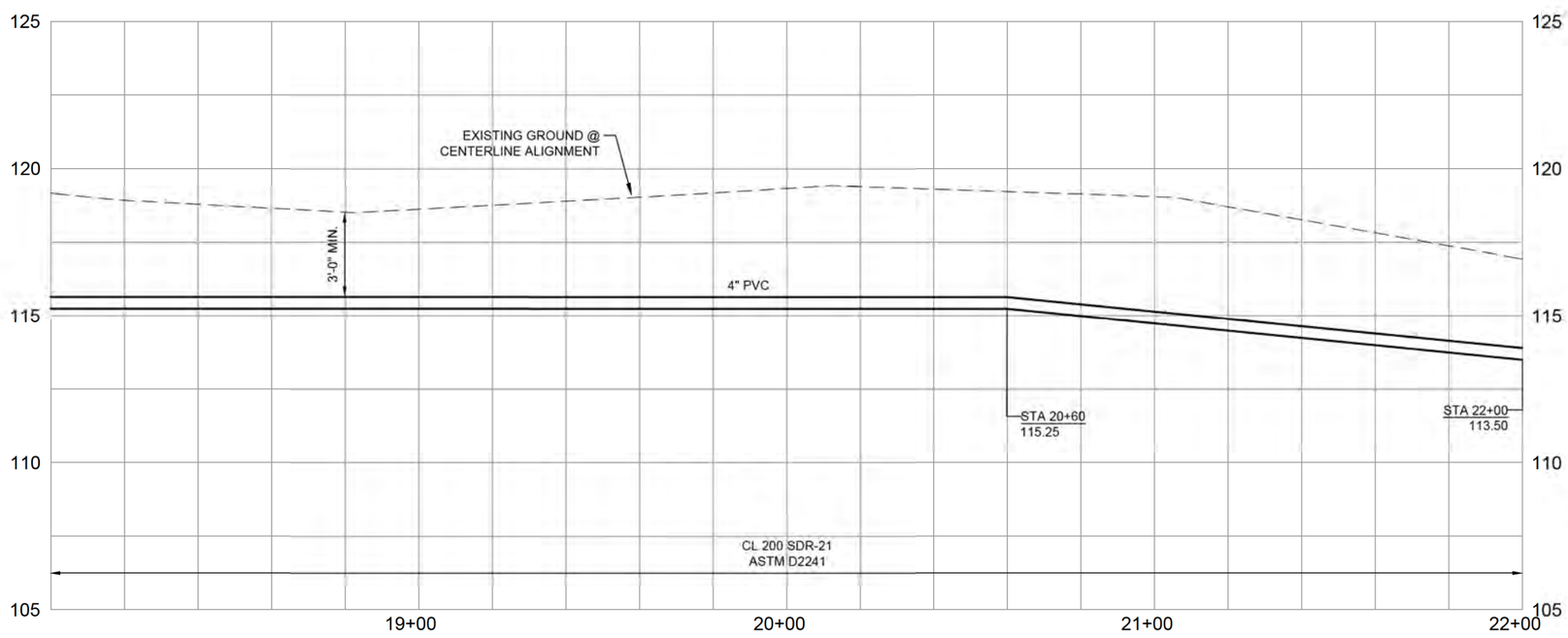

PROFILE

CONSTRUCTION NOTES

1. MAINTAIN FLOW FROM COMMUNITY CENTER PUMP STATION FOUND ON SHEET 9 THROUGH EXISTING PIPE.
2. ABANDON EXISTING BURIED 2" PVC AFTER CHANGEOVER TO NEW 4" PIPE.
3. INSTALL NEW 4" PVC FORCE MAIN.
4. ALL CONSTRUCTION ACTIVITIES TO REMAIN WITHIN EASEMENT.
5. INSTALL EROSION CONTROL FENCING ALONG BOTH SIDES OF40' EASEMENT.
6. CONTRACTOR IS RESPONSIBLE FOR STAKING 40' EASEMENT/WORK LIMITS.

Digitally signed by Ron Weigel
Date: 2021.03.12 07:08:39-08'00'

RON C. WEIGEL
STATE OF WASHINGTON
28,402
REGISTERED
PROFESSIONAL ENGINEER

SHEET 8 OF -

WW COLLECTION SYSTEM & WWTF IMPROVEMENTS PROJECT
PLAN/PROFILE STA 18+00 TO 22+00
MARCH 2021

THE CHEHALIS TRIBE

CENTURY WEST ENGINEERING
5500 MEADOWS RD. #250 | LAKE OSWEGO, OR 97035
WWW.CENTURYWEST.COM | 503.419.2120

DESIGNED: R. WEIGEL
DRAWN: S. KELLEY
CHECKED: R. VOORHIES
CWE PROJECT NO. 41445001.01

SCALE
PLAN 1" =40'
PROFILE HORIZ. 1" =40' VERT. 1" =5'
ONE INCH (REF)

NO.	DATE	REVISION	BY	APRV'D

FILE Y:\Projects\Chehalis Tribe\STEP - WWTP Project\CADD_WORKING\ Sht 3-17.dwg 02/08/2021 - 9:12am

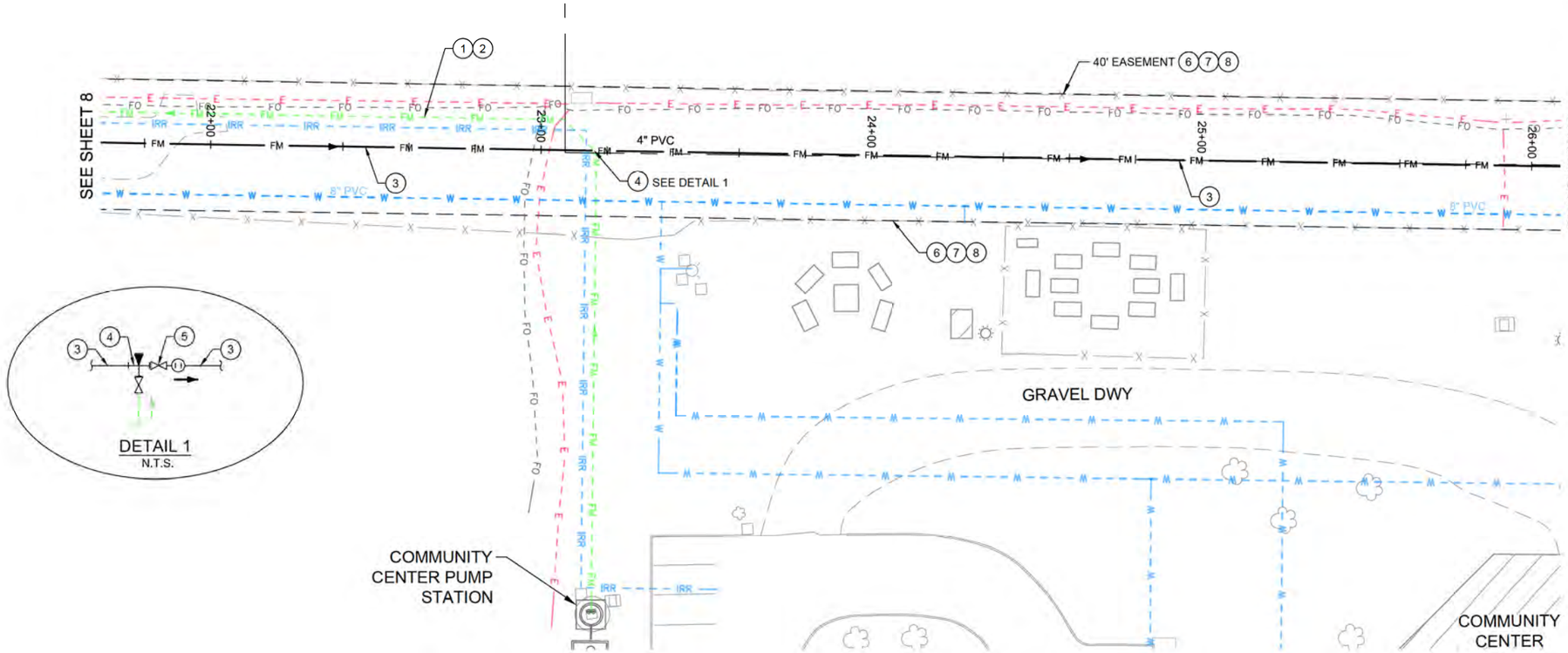

PLAN

DETAIL 1
N.T.S.

CONSTRUCTION NOTES

1. MAINTAIN FLOW FROM COMMUNITY CENTER PUMP STATION THROUGH IN TEMPORARY 2" PVC AND REMAINING BURIED SECTION OF EXISTING PIPE. UPON COMPLETION OF NEW 4" PIPE, SWITCHOVER THE EXISTING 2" PVC COMMUNITY CENTER PUMP STATION DISCHARGE LINE.
2. ABANDON EXISTING 2" PVC AFTER CHANGEOVER TO NEW 4" PIPE.
3. INSTALL NEW 4" PVC FORCE MAIN.
4. STA 23+19±
   INSTALL 4" x 2" TEE WITH 2" VALVE .
5. INSTALL 4" ISOLATION VALVE AND IN LINE PIG PORT. REFER TO DETAILS ON SHEET 27.
6. ALL CONSTRUCTION ACTIVITIES TO REMAIN WITHIN EASEMENT.
7. INSTALL EROSION CONTROL FENCING ALONG BOTH SIDES OF 40' EASEMENT.
8. CONTRACTOR IS RESPONSIBLE FOR STAKING 40' EASEMENT/WORK AREAS.

SHEET NOTE

1. COMMUNITY CENTER PUMP STATION CURRENTLY SENDS FLOWS TO PUBLIC WORKS PUMP STATION FOUND ON SHEET 5, REFER TO SHEET 3 FOR PUMP STATION SYSTEM DIAGRAM.

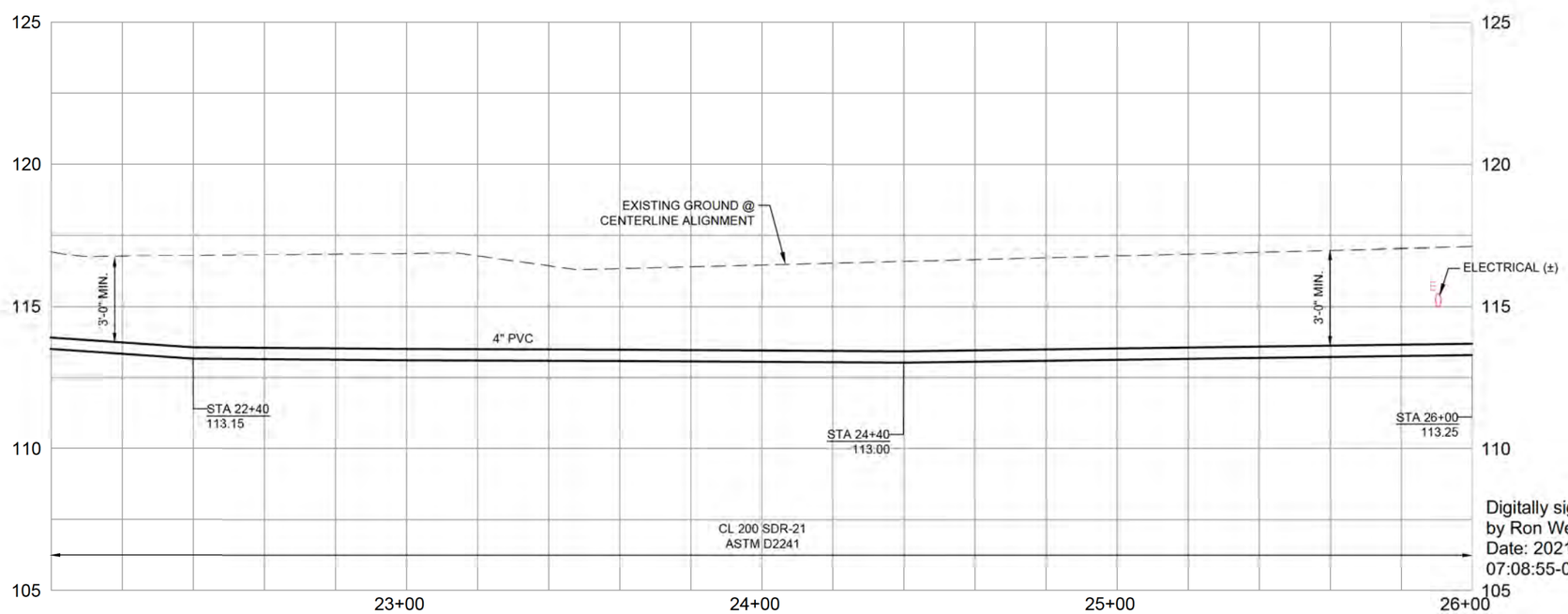

PROFILE

Digitally signed by Ron Weigel
Date: 2021.03.12 07:08:55-08'00'

RON C. WEIGEL
STATE OF WASHINGTON
28,402
REGISTERED
PROFESSIONAL ENGINEER

SHEET 9 OF -

WW COLLECTION SYSTEM & WWTF IMPROVEMENTS PROJECT
PLAN/PROFILE STA 22+00 TO 26+00
MARCH 2021

THE CHEHALIS TRIBE

CENTURY WEST ENGINEERING
5500 MEADOWS RD. #250 | LAKE OSWEGO, OR 97035
WWW.CENTURYWEST.COM | 503.419.2130

DESIGNED: R. WEIGEL
DRAWN: S. KELLEY
CHECKED: R. VOORHIES
CWE PROJECT NO. 41445001.01

SCALE
PLAN 1" =40'
PROFILE HORIZ. 1" =40' VERT. 1" =5'
ONE INCH (REF)

NO.	DATE	REVISION	BY	APRVD.

FILE: Y:\Projects\Chehalis Tribe\STEP - WWTP Project\CAD_WORKING\ Grts 3-17.dwg 03/08/2021 - 9:19am

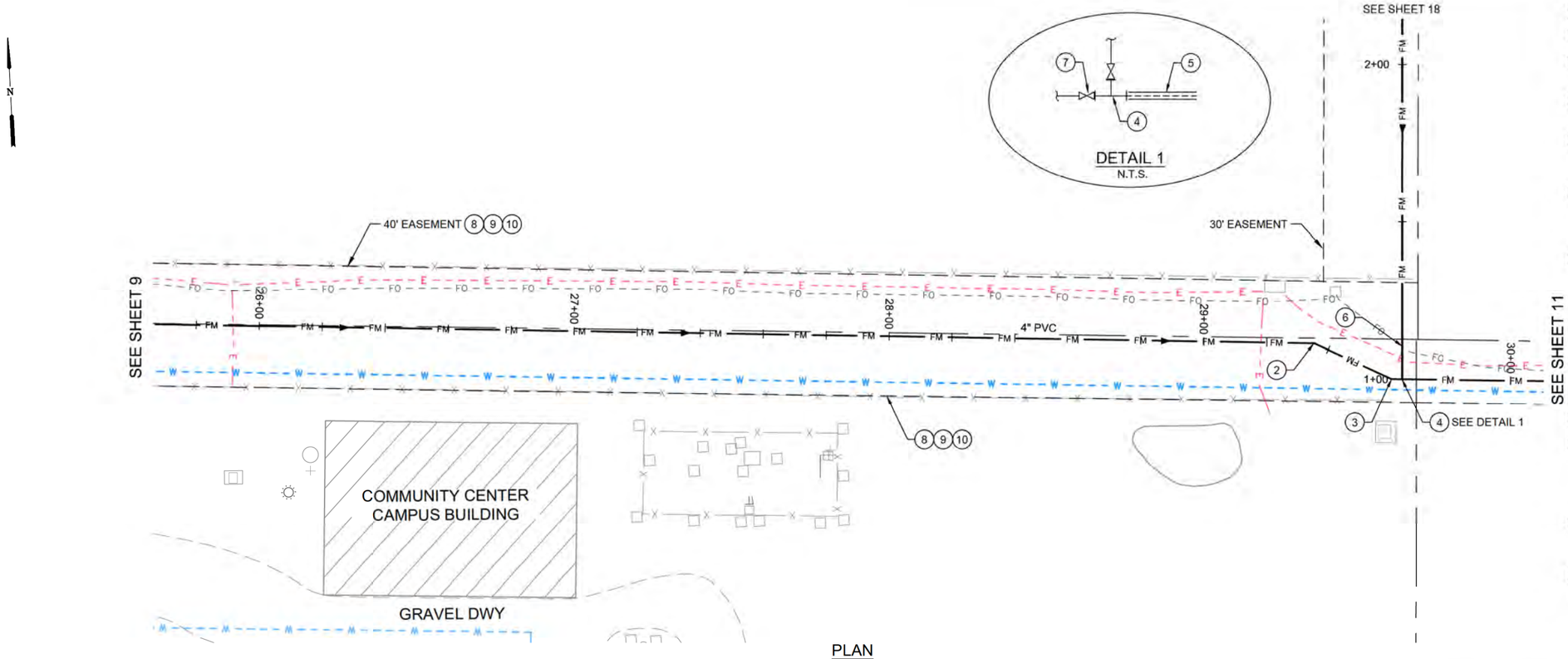

PLAN

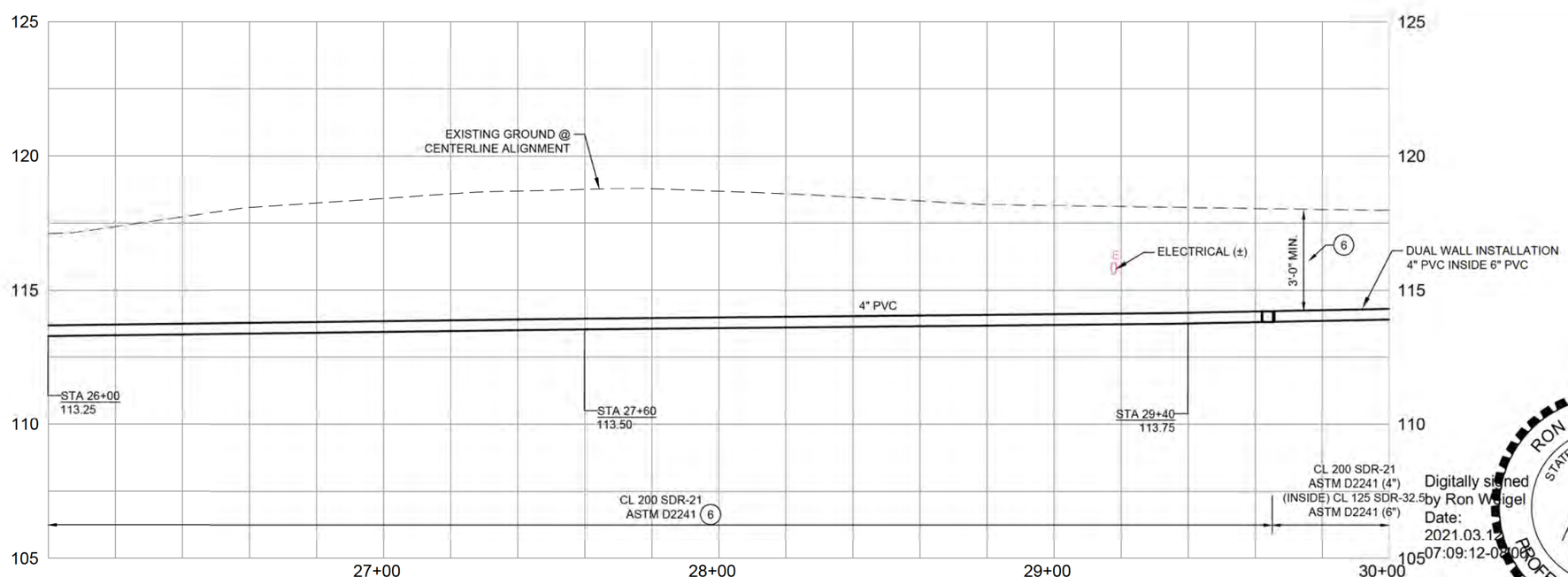

PROFILE

CONSTRUCTION NOTES

1. INSTALL NEW 4" PVC FORCE MAIN.
2. STA 29+35
   INSTALL 4" - 22 1/2° ELBOW
3. STA 29+62
   INSTALL 4" - 22 1/2° ELBOW
4. STA 29+68
   INSTALL 4" x 2" PVC TEE WITH 2" VALVE. SEE DETAIL THIS SHEET.
5. BEGIN INSTALLATION OF 4" PVC PIPE INSIDE 6" CLASS 125 PVC PIPE PARALLEL TO WATERLINE AS SHOWN IN DETAIL1.
6. POTHOLE ELECTRICAL AND FIBER OPTIC BEFORE INSTALLING NEW PIPE FROM STATION 26+00 TO 29+00. INFORMATION USE TO INSURE VERTICFAL CLEARANCE BELOW THESE UTILITIES TO INSTALL NEW 2" PIPE RUN NORTH WITHOUT A DIP IN THE LINE. THIS MAY REQUIRE SLIGHTLY DEEPER PIPE INSTALLATION IN THIS SECTION.
7. INSTALL 4" ISOLATION VALVE.
8. ALL CONSTRUCTION ACTIVITIES TO REMAIN WITHIN EASEMENTS. OWNER WILL STAKE LIMITS OF WORK AREA. FOR CONTRACTOR EVERY 100' WITHIN 20' EASEMENT.
9. INSTALL EROSION CONTROL FENCING ALONG BOTH SIDES OF 20' AND 40' EASEMENTS.
10. CONTRACTOR IS RESPONSIBLE FOR STAKING 40' EASEMENT/WORK LIMITS.

RON C. WEIGEL
STATE OF WASHINGTON
28,402
REGISTERED
PROFESSIONAL ENGINEER

Digitally signed by Ron Weigel
Date: 2021.03.17 07:09:12-08'00'

SHEET 10 OF -

WW COLLECTION SYSTEM & WWTF IMPROVEMENTS PROJECT
PLAN/PROFILE STA 26+00 TO 30+00
MARCH 2021

THE CHEHALIS TRIBE

CENTURY WEST ENGINEERING
5300 MEADOWS RD. #250 | LAKE OSWEGO, OR 97035
WWW.CENTURYWEST.COM | 503.419.2130

DESIGNED: R. WEIGEL
DRAWN: S. KELLEY
CHECKED: R. VOORHIES
CWE PROJECT NO. 41445001.01

SCALE
PLAN 1" =40'
PROFILE HORIZ. 1" =40' VERT. 1" =5'
ONE INCH (REF)

NO.	DATE	REVISION	BY	APRVD.

FILE: Y:\Projects\Chehalis Tribe\STEP - WWTP Project\CAD_WORKING Grts 3-17.dwg 03/08/2021 - 9:36am

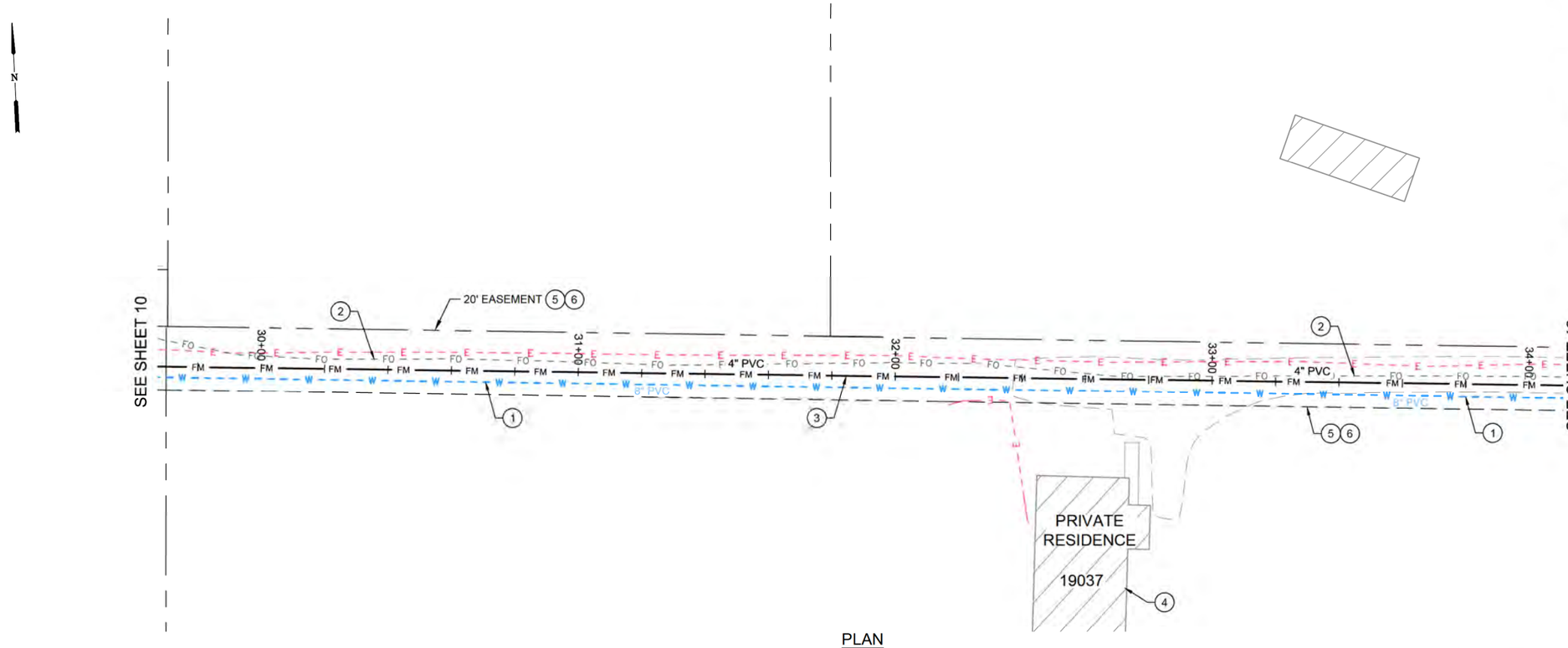

PLAN

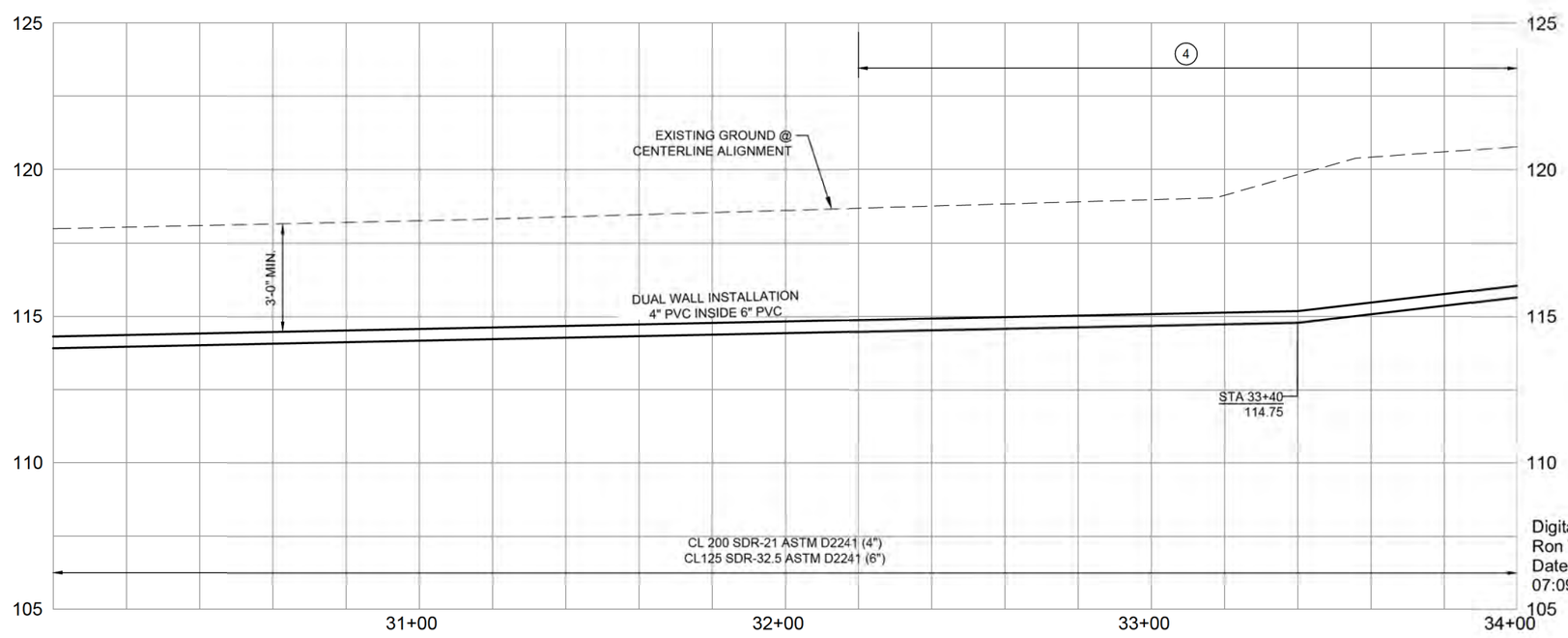

PROFILE

CONSTRUCTION NOTES

1. POTHOLE EXISTING 8" WATERLINE EVERY 100'± TO PREVENT DAMAGE DURING INSTALLATION OF NEW FORCE MAIN.
2. POTHOLE EXISTING FIBER OPTIC EVERY 100'± TO PREVENT DAMAGE DURING INSTALLATION OF NEW FORCE MAIN.
3. INSTALL 4" PVC PIPE INSIDE 6" CLASS 125 PVC PIPE PARALLEL TO WATERLINE.
4. COORDINATE ALL CONSTRUCTION WITH PRIVATE RESIDENCE TO INSURE EMERGENCY ACCESS TO ANDERSON ROAD IF NECESSARY. ADDITIONALLY, ALLOW USE OF DRIVEWAY DURING STANDARD WORK HOURS OF 7:00AM TO 5:00PM M-F FOR WORK/MEDICAL OR OTHER CRITICAL TRIPS.
5. ALL CONSTRUCTION ACTIVITIES TO REMAIN WITHIN EASEMENT. OWNER WILL STAKE LIMITS OF WORK AREA EVERY 100' WITHIN 20' EASEMENT.
6. INSTALL EROSION CONTROL FENCING ALONG BOTH SIDES OF EASEMENT. PROVIDE 125' BREAK IN FENCING FROM APPROXIMATE STA 32+25 ON SOUTH SIDE OF DRIVEWAY.

Digitally signed by Ron Weigel
Date: 2021.03.12 07:09:31-08'00'

RON C. WEIGEL
STATE OF WASHINGTON
28,402
REGISTERED
PROFESSIONAL ENGINEER

SHEET 11 OF -

WW COLLECTION SYSTEM & WWTF IMPROVEMENTS PROJECT
PLAN/PROFILE STA 30+00 TO 34+00
MARCH 2021

THE CHEHALIS TRIBE

CENTURY WEST ENGINEERING
5500 MEADOWS RD. #250 | LAKE OSWEGO, OR 97035
WWW.CENTURYWEST.COM | 503.419.2130

DESIGNED: R. WEIGEL
DRAWN: S. KELLEY
CHECKED: R. VOORHIES
CWE PROJECT NO. 41445001.01

SCALE
PLAN 1" =40'
PROFILE HORIZ. 1" =40' VERT. 1" =5'
ONE INCH (REF)

NO.	DATE	REVISION	BY	APRV'D

FILE Y:\Projects\Chehalis Tribe\STEP - WWTP Project\CADD_WORKING\ Sht 3-17.dwg 03/15/2021 - 8:11am

SHEET NOTE

1. DETAILED TOPOGRAPHIC INFORMATION FROM ANDERSON ROAD TO THE CASINO PARKING LOT WAS NOT PREPARED DURING DESIGN. A FEW LARGE TREES WITHIN 20' EASEMENT HAVE BEEN IDENTIFIED TO BE CUT. CONTRACTOR SHALL ALSO EXPECT TO REMOVE SMALLER TREES AND VEGETATION WITHIN THE STRIP TO COMPLETE INSTALLATION OF NEW PIPE.

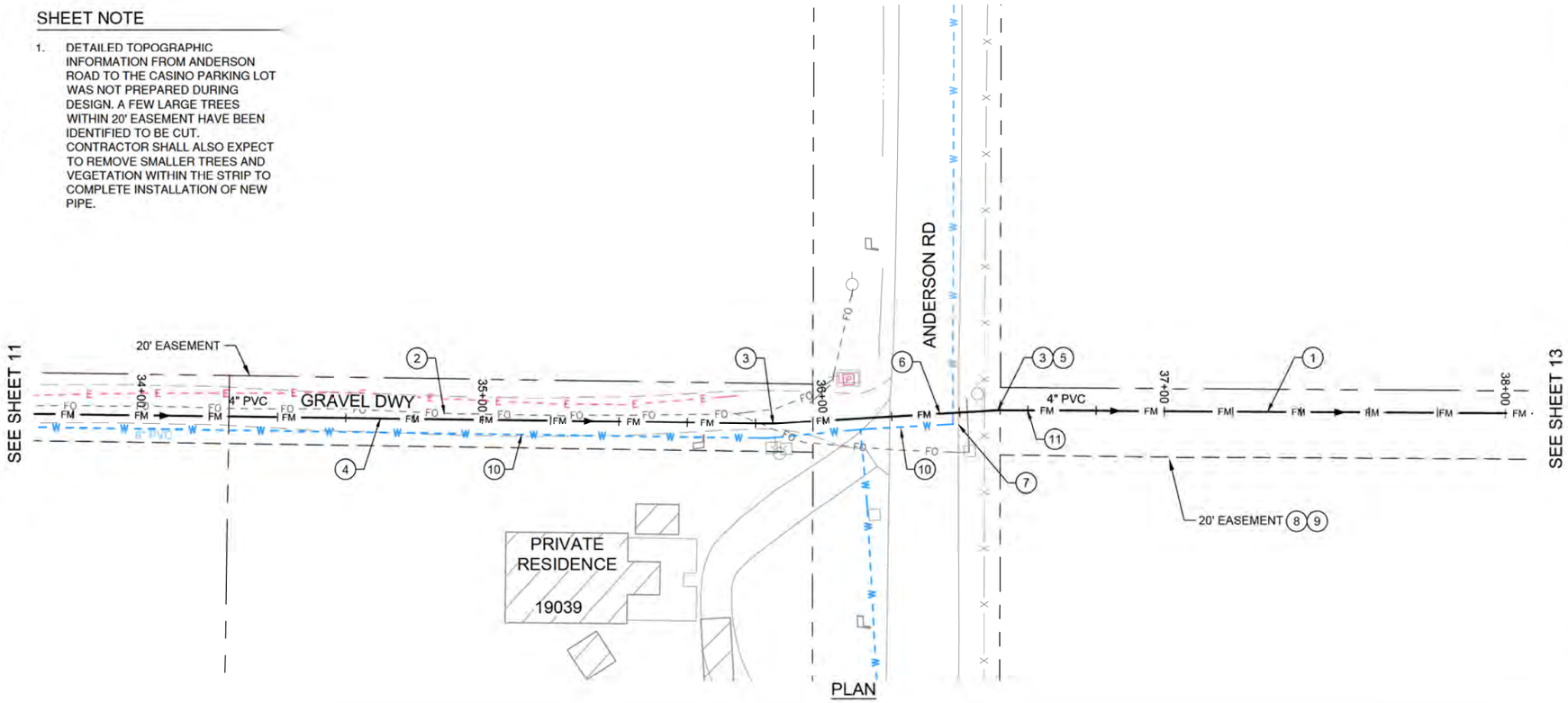

CONSTRUCTION NOTES

1. INSTALL NEW 4" PVC FORCE MAIN.
2. POTHOLE EXISTING FIBER OPTIC EVERY 100'± TO PREVENT DAMAGE DURING INSTALLATION OF NEW FORCE MAIN.
3. DEFLECT PIPE FROM STA 35+85 TO STA 36+52 TO PROVIDE APPROXIMATE 7' OFFSET FROM NEW 20' EASEMENT AS SHOWN. INSTALL 4" IN-LINE ISOLATION VALVE.
4. INSTALL 4" PVC PIPE INSIDE 6" CLASS 125 PVC PIPE PARALLEL TO WATERLINE.
5. END INSTALLATION OF 4" PVC PIPE INSIDE 6" CLASS 125 PVC PIPE.
6. ANDERSON ROAD TO BE RECONSTRUCTED DURING 2021. ROADWAY CONTRACTOR SHALL BE INSTALLING A NEW APPROXIMATE 30 FOOT LONG 12" STEEL CASING IN LOCATION SHOWN. PIPE CONTRACTOR SHALL INSTALL DUAL WALL 4" PVC WITHIN CASING AND SEAL EACH END WITH GROUT. COORDINATE WITH ROADWAY CONTRACTOR FOR TIMING.
7. EXISTING 8" WATERLINE TEE WAS NOT LOCATED. FITTING HAS ONE VALVE ON SOUTH LEG ONLY.
8. ALL CONSTRUCTION ACTIVITIES TO REMAIN WITHIN EASEMENT. OWNER WILL STAKE LIMITS OF WORK AREA EVERY 100' WITHIN 20' EASEMENT.
9. INSTALL EROSION CONTROL FENCING ALONG BOTH SIDES OF 20' EASEMENT.
10. POTHOLE EXISTING WATERLINE EVERY 100'± AND ON EACH SIDE OF ANDERSON ROAD (OUTSIDE PAVEMENT) TO PREVENT DAMAGE DURING INSTALLATION OF NEW FORCE MAIN.
11. STA 36+60 INSTALL IN-LINE PIG PORT. REFER TO DETAILS ON SHEET 27.

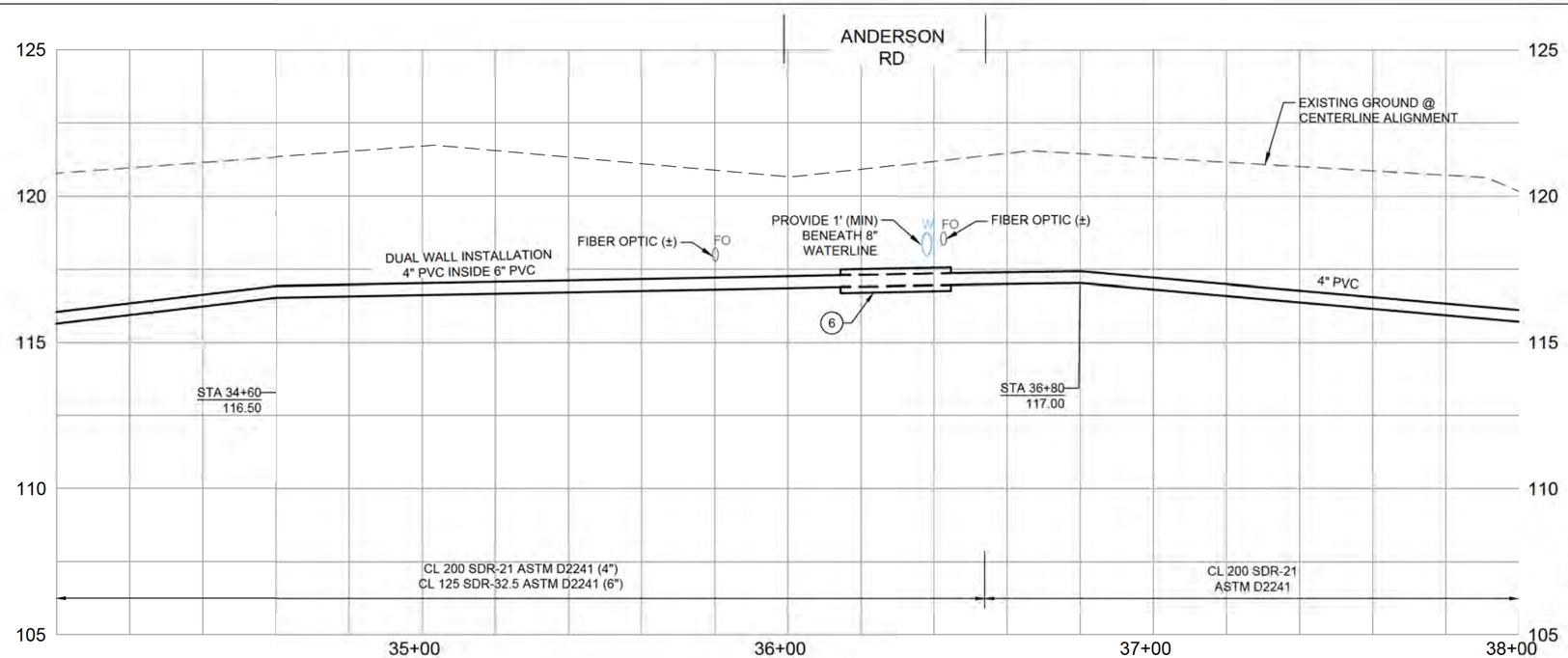

PROFILE

Digitally signed by Ron Weigel
Date: 2021.03.12 07:09:48-08'00'

RON C. WEIGEL
STATE OF WASHINGTON
28,402
REGISTERED
PROFESSIONAL ENGINEER

SHEET 12 OF -

WW COLLECTION SYSTEM & WWTF IMPROVEMENTS PROJECT
PLAN/PROFILE STA 34+00 TO 38+00
MARCH 2021

THE CHEHALIS TRIBE

CENTURY WEST ENGINEERING
5500 MEADOWS RD, #250 | LAKE OSWEGO, OR 97035
WWW.CENTURYWEST.COM | 503.419.2130

DESIGNED: R. WEIGEL
DRAWN: S. KELLEY
CHECKED: R. VOORHIES
CWE PROJECT NO. 41445001.01

SCALE
PLAN 1" =40'
PROFILE HORIZ. 1" =40' VERT. 1" =5'
ONE INCH (REF)

NO.	DATE	REVISION	BY	APRVD.

FILE: Y:\Projects\Chehalis Tribe\STEP - WWTP Project\CAD_WORKING\ Sht s 3-17.dwg 03/10/2021 - 9:10am

SHEET NOTE

1. DETAILED TOPOGRAPHIC INFORMATION FROM ANDERSON ROAD TO THE CASINO PARKING LOT WAS NOT PREPARED DURING DESIGN. A FEW LARGE TREES WITHIN 20' EASEMENT HAVE BEEN IDENTIFIED TO BE CUT. CONTRACTOR SHALL ALSO EXPECT TO REMOVE SMALLER TREES AND VEGETATION WITHIN THE STRIP TO COMPLETE INSTALLATION OF NEW PIPE.

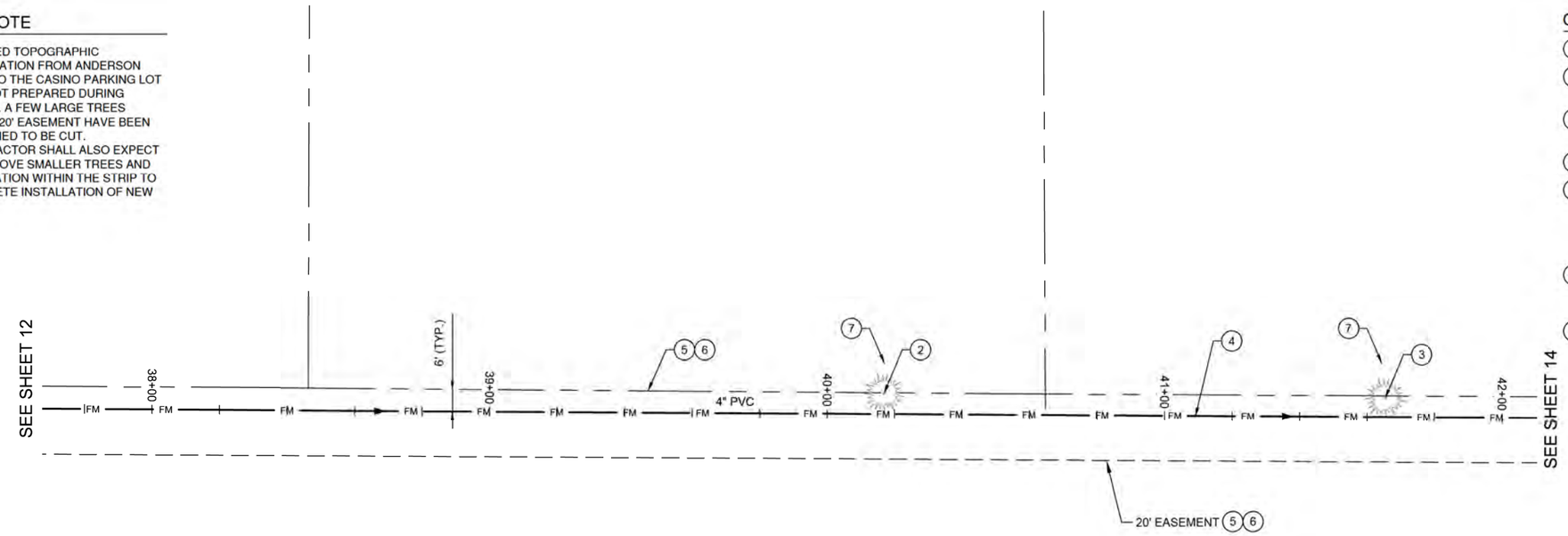

PLAN

CONSTRUCTION NOTES

1. INSTALL NEW 4" PVC FORCE MAIN.
2. CUT EXISTING 20"± FIR TREE AND REMOVE STUMP .
3. CUT EXISTING 12"± FIR TREE AND REMOVE STUMP.
4. INSTALL NEW 2" AIR RELIEF VALVE.
5. ALL CONSTRUCTION ACTIVITIES (UNLESS NOTED OTHERWISE) TO REMAIN WITHIN EASEMENT. OWNER WILL STAKE LIMITS OF WORKS AREA EVERY 100' WITHIN 20' EASEMENT.
6. INSTALL EROSION CONTROL FENCING ALONG BOTH SIDES OF 20' EASEMENT.
7. TREES IDENTIFIED TO BE CUT SHALL BE PLACED OUTSIDE WORK AREA FOR OWNER TO REMOVE. TEMPORARY ACCESS TO REMOVE TREE AND LEAVE ON NORTH SIDE OF 20' EASEMENT WILL BE ALLOWED.

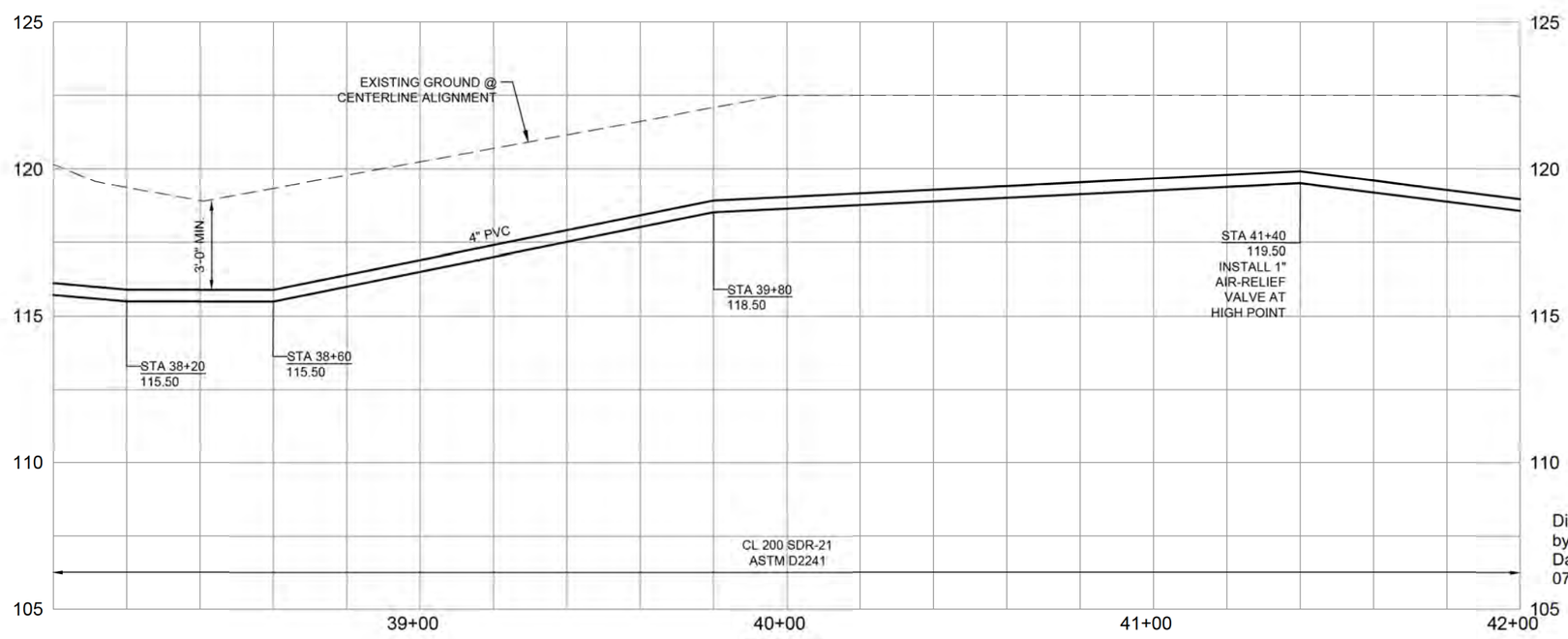

PROFILE

Digitally signed by Ron Weigel
Date: 2021.03.12 07:10:08-08'00'

RON C. WEIGEL
STATE OF WASHINGTON
28,402
REGISTERED
PROFESSIONAL ENGINEER

SHEET 13 OF -

WW COLLECTION SYSTEM & WWTF IMPROVEMENTS PROJECT
PLAN/PROFILE STA 38+00 TO 42+00
MARCH 2021

THE CHEHALIS TRIBE

CENTURY WEST ENGINEERING
5500 MEADOWS RD. #250 | LAKE OSWEGO, OR 97035
WWW.CENTURYWEST.COM | 503.419.2130

DESIGNED: R. WEIGEL
DRAWN: S. KELLEY
CHECKED: R. VOORHIES
CWE PROJECT NO. 41445001.01

SCALE
PLAN 1" =40'
PROFILE HORIZ. 1" =40' VERT. 1" =5'
ONE INCH (REF)

NO.	DATE	REVISION	BY	APRV'D

FILE Y:\Projects\Chehalis Tribe\STEP - WWTP Project\CADD_WORKING\ Sht3-17.dwg 03/08/2021 - 9:46am

SHEET NOTE

1. DETAILED TOPOGRAPHIC INFORMATION FROM ANDERSON ROAD TO THE CASINO PARKING LOT WAS NOT PREPARED DURING DESIGN. A FEW LARGE TREES WITHIN 20' EASEMENT HAVE BEEN IDENTIFIED TO BE CUT. CONTRACTOR SHALL ALSO EXPECT TO REMOVE SMALLER TREES AND VEGETATION WITHIN THE STRIP TO COMPLETE INSTALLATION OF NEW PIPE.

CONSTRUCTION NOTES

1. INSTALL NEW 4" PVC FORCE MAIN.
2. CUT EXISTING 36"± FIR TREE AND REMOVE STUMP.
3. ALL CONSTRUCTION ACTIVITIES (UNLESS NOTED OTHERWISE) TO REMAIN WITHIN EASEMENT. OWNER WILL STAKE LIMITS OF WORK AREA EVERY 100' WITHIN EASEMENT.
4. INSTALL EROSION CONTROL FENCING ALONG BOTH SIDES OF EASEMENT.
5. TREES IDENTIFIED TO BE CUT SHALL BE PLACED OUTSIDE WORK AREA FOR OWNER TO REMOVE. TEMPORARY ACCESS TO REMOVE TREE AND LEAVE ON THE NORTH SIDE OF 20' EASEMENT WILL BE ALLOWED.

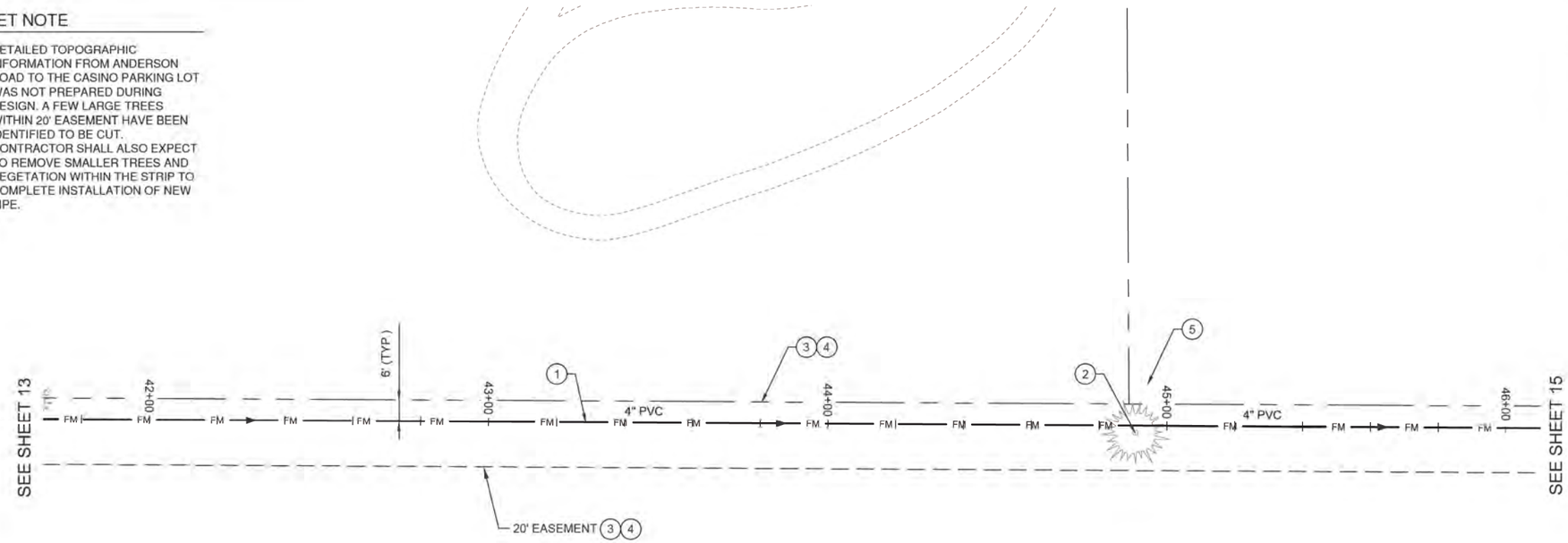

PLAN

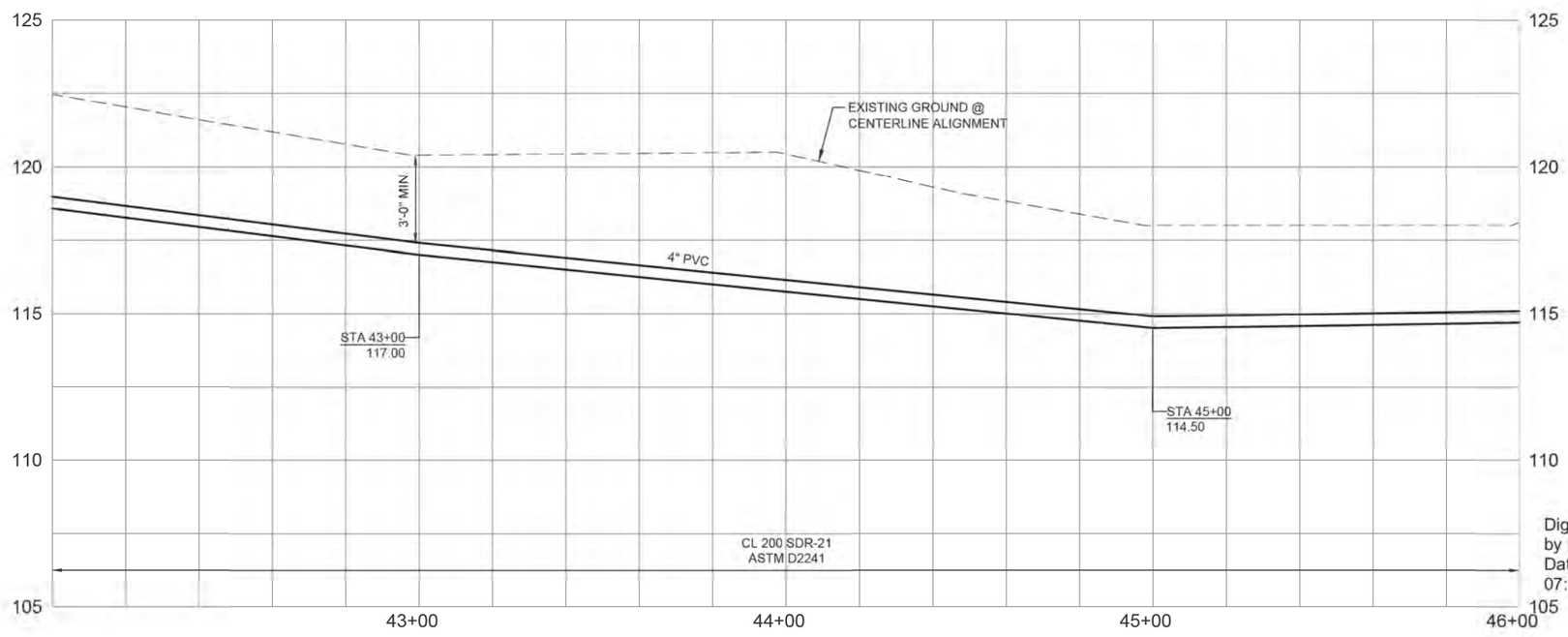

PROFILE

Digitally signed by Ron Weigel
Date: 2021.03.12 07:10:26-08'00'

RON C. WEIGEL
STATE OF WASHINGTON
28,402
REGISTERED
PROFESSIONAL ENGINEER

SHEET 14 OF -

WW COLLECTION SYSTEM & WWTF IMPROVEMENTS PROJECT
PLAN/PROFILE STA 42+00 TO 46+00
MARCH 2021

THE CHEHALIS TRIBE

CENTURY WEST ENGINEERING
5500 MEADOWS RD. #250 | LAKE OSWEGO, OR 97035
WWW.CENTURYWEST.COM | 503.419.2130

DESIGNED: R. WEIGEL
DRAWN: S. KELLEY
CHECKED: R. VOORHIES
CWE PROJECT NO. 41445001.01

SCALE
PLAN 1" =40'
PROFILE HORIZ. 1" =40' VERT. 1" =5'
ONE INCH (REF.)

NO.	DATE	REVISION	BY	APRVD.

FILE Y:\Projects\Chehalis Tribe\STEP - WWTP Project\CADD_WD\RAND Sht 3-17.dwg 03/08/2021 - 9:47am

SHEET NOTE

1. DETAILED TOPOGRAPHIC INFORMATION FROM ANDERSON ROAD TO THE CASINO PARKING LOT WAS NOT PREPARED DURING DESIGN. A FEW LARGE TREES WITHIN 20' EASEMENT HAVE BEEN IDENTIFIED TO BE CUT. CONTRACTOR SHALL ALSO EXPECT TO REMOVE SMALLER TREES AND VEGETATION WITHIN THE STRIP TO COMPLETE INSTALLATION OF NEW PIPE.

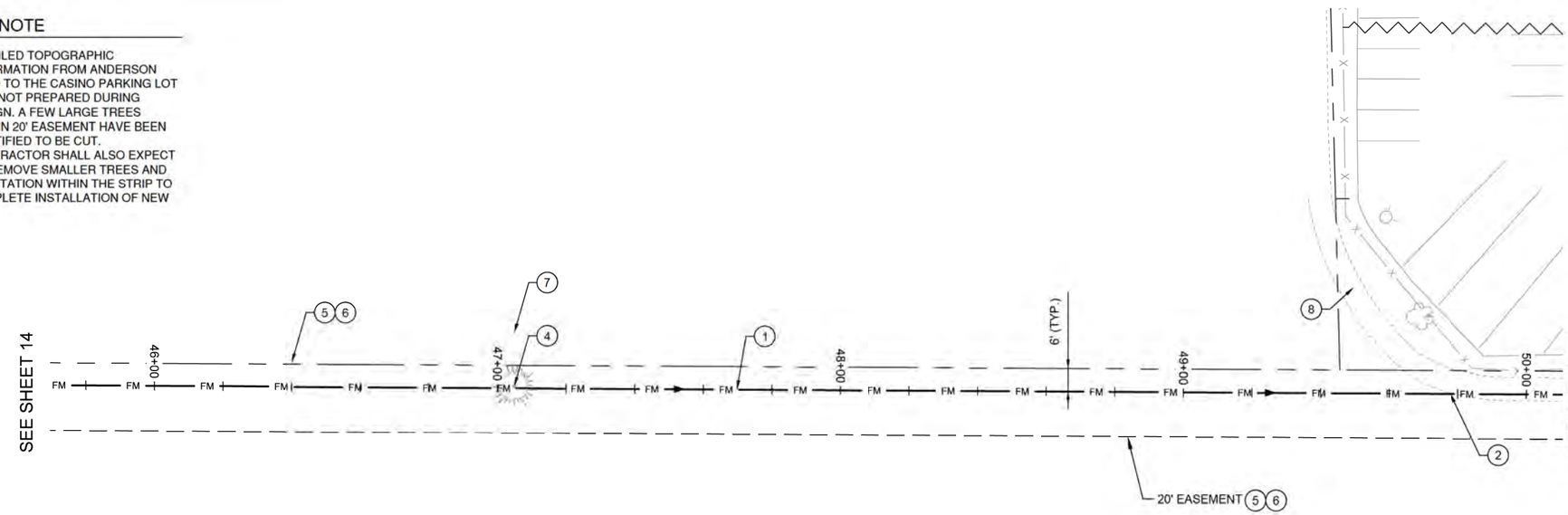

PLAN

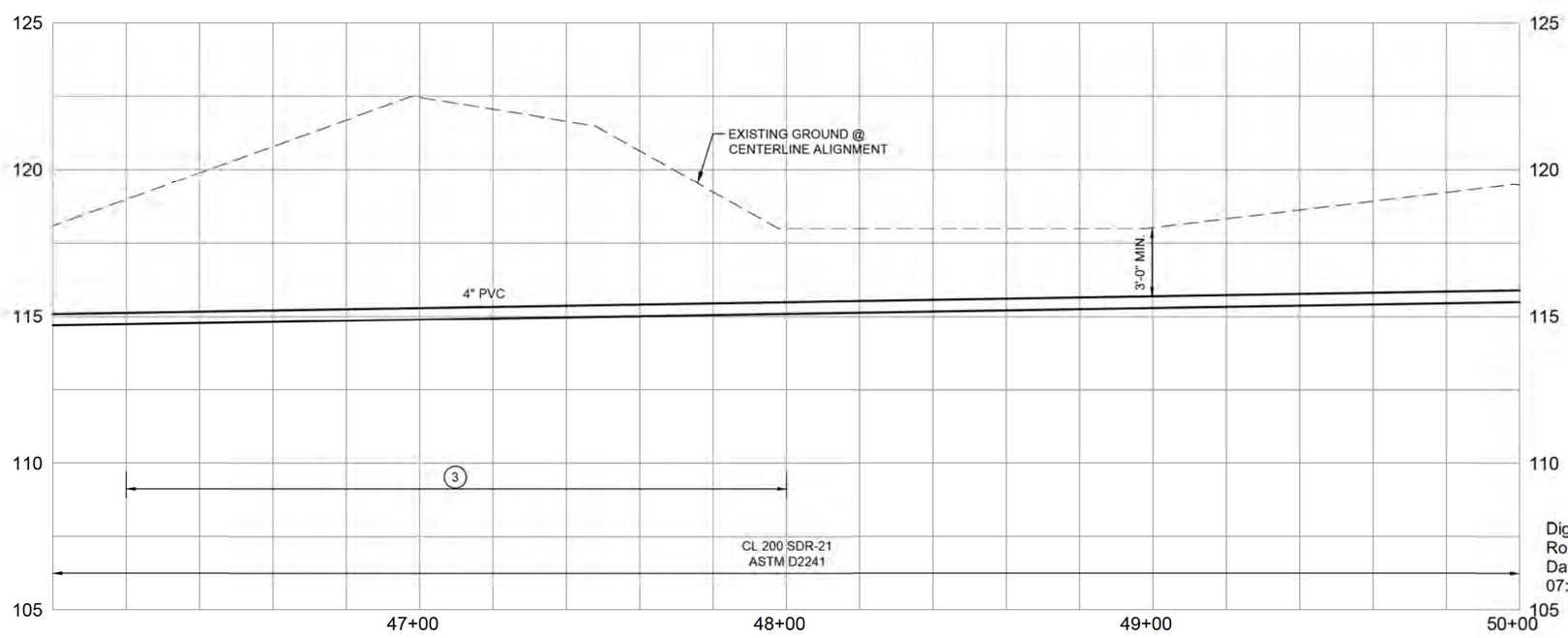

PROFILE

CONSTRUCTION NOTES

1. INSTALL NEW 4" PVC FORCE MAIN.
2. STA 49+80 INSTALL IN-LINE PIG PORT. REFER TO DETAIL ON SHEET 27.
3. MAINTAIN CONSTANT SLOPE FROM APPROXIMATE STA 46+20 TO STA 48+00. DEEPER EXCAVATION THROUGH THE SIDE OF THIS OLD BERM WILL BE NECESSARY THROUGH THIS LIMITED SECTION. TEMPORARY PLACEMENT OF SOIL MAY BE REQUIRED TO PROVIDE LEVEL SURFACE FOR EXCAVATOR. REGRADE SURFACE TO ORIGINAL CONTOURS FOLLOWING COMPLETION OF PIPE INSTALLATION.
4. CUT EXISTING 18"± FIR TREE AND REMOVE STUMP.
5. ALL CONSTRUCTION ACTIVITIES (UNLESS NOTED OTHERWISE) TO REMAIN WITHIN EASEMENT. OWNER WILL STAKE LIMITS OF WORK AREA EVERY 100' WITHIN EASEMENT.
6. INSTALL EROSION CONTROL FENCING ALONG BOTH SIDES OF EASEMENT.
7. TREE IDENTIFIED TO BE CUT SHALL BE PLACED OUTSIDE WORK AREA FOR OWNER TO REMOVE.
8. ACCESS WILL BE ALLOWED IN THIS AREA DURING CONSTRUCTION.

Digitally signed by Ron Weigel
Date: 2021.03.12 07:10:44-08'00'

RON C. WEIGEL
STATE OF WASHINGTON
28,402
REGISTERED PROFESSIONAL ENGINEER

SHEET 15 OF -

WW COLLECTION SYSTEM & WWTF IMPROVEMENTS PROJECT
PLAN/PROFILE STA 46+00 TO 50+00
MARCH 2021

THE CHEHALIS TRIBE

CENTURY WEST ENGINEERING
5500 MEADOWS RD. #250 | LAKE OSWEGO, OR 97035
WWW.CENTURYWEST.COM | 503.419.2130

DESIGNED: R. WEIGEL
DRAWN: S. KELLEY
CHECKED: R. VOORHIES
CWE PROJECT NO. 41445001.01

SCALE
PLAN 1" =40'
PROFILE HORIZ. 1" =40' VERT. 1" =5'
ONE INCH (REF)

NO.	DATE	REVISION	BY	APRV'D

FILE Y:\Projects\Chehalis Tribe\STEP - WWTP Project\CAD_VBORKING\ Sht3.3-17.dwg 03/08/2021 - 9:48am

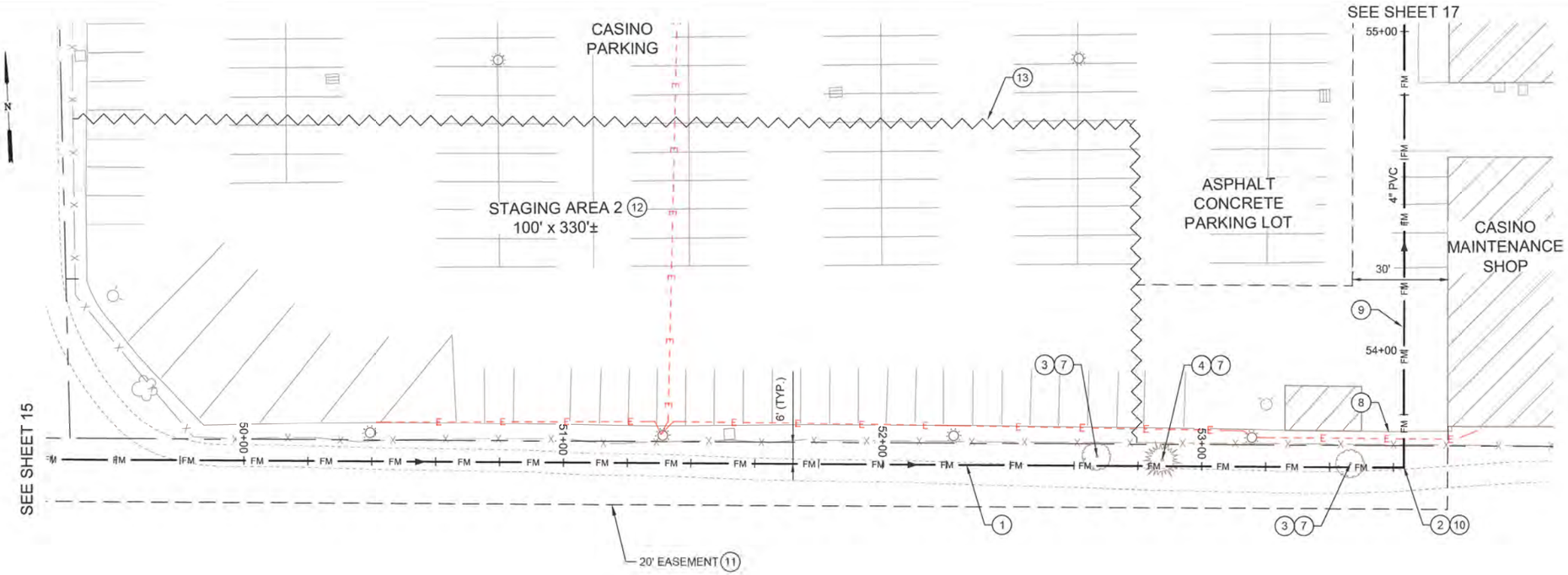

PLAN

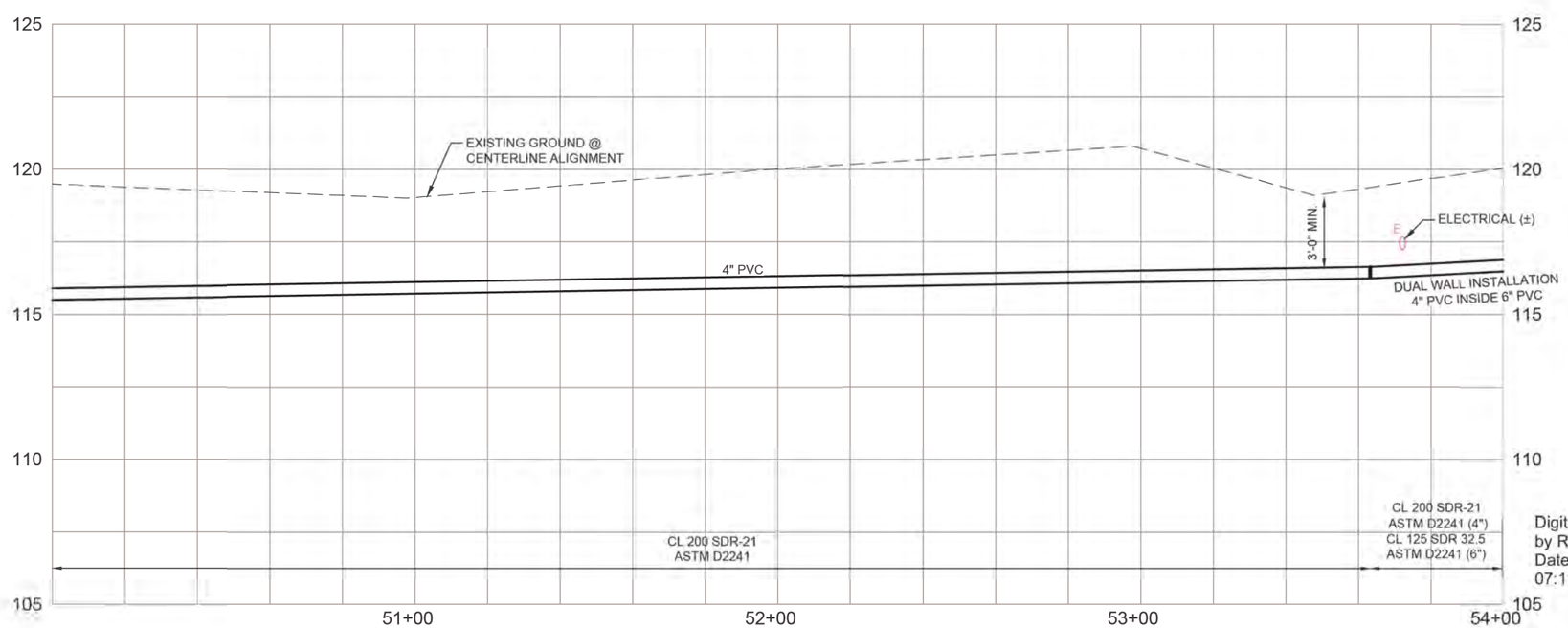

PROFILE

CONSTRUCTION NOTES

1. INSTALL NEW 4" PVC FORCE MAIN.
2. STA 53+65 INSTALL 4" IN-LINE PIG PORT AND 4" 90 DEGREE ELBOW. REFER TO DETAILS ON SHEET 27.
3. CUT EXISTING 12"± OAK TREE AND REMOVE STUMP.
4. CUT EXISTING 20"± FIR TREE AND REMOVE STUMP.
5. ALL CONSTRUCTION ACTIVITIES (UNLESS NOTED OTHERWISE) TO REMAIN WITHIN EASEMENT. OWNER WILL STAKE LIMITS OF WORK AREA EVERY 100' WITHIN EASEMENT.
6. INSTALL EROSION CONTROL FENCING ALONG SOUTH SIDE OF EASEMENT.
7. TREES IDENTIFIED TO BE CUT IN THIS AREA SHALL BE REMOVED AND DISPOSED AT CONTRACTOR EXPOSE.
8. ACCESS TO 20' EASEMENT WILL BE ALLOWED ACROSS PARKING LOT BETWEEN STRUCTURES WHERE SHOWN. PROVIDE CHAIN LINK FENCING ACROSS OPENING DURING OFF HOURS WHEN NOT NEEDED FOR CONSTRUCTION ACCESS.
9. PROVIDE STEEL SHEETS ACROSS ANY OPEN TRENCHES IN PARKING LOT. INSTALL TEMPORARY PAVEMENT (t=2") UNTIL PERMANENT TRENCH PATCH IS COMPLETE.
10. BEGIN INSTALLATION OF 4" PVC PIPE INSIDE 6" CLASS 125 PVC PIPE 3' NORTH.
11. ALL CONSTRUCTION ACTIVITIES TO REMAIN WITHIN 20' EASEMENT.
12. ACCESS TO STAGING AREA WILL ONLY BE ALLOWED THROUGH DRIVEWAY TO WWTF. REFER TO SHEET 17.
13. PROVIDE 6' HIGH TEMPORARY CHAIN LINK FENCING ON NORTH AND EAST SIDES TO MAINTAIN SEPARATION FROM PARKING LOT IF THIS AREA IS USED.

SHEET NOTE

1. DETAILED TOPOGRAPHIC INFORMATION FROM ANDERSON ROAD TO THE CASINO PARKING LOT WAS NOT PREPARED DURING DESIGN. A FEW LARGE TREES WITHIN 20' EASEMENT HAVE BEEN IDENTIFIED TO BE CUT. CONTRACTOR SHALL ALSO EXPECT TO REMOVE SMALLER TREES AND VEGETATION WITHIN THE STRIP TO COMPLETE INSTALLATION OF NEW PIPE.

RON C. WEIGEL
STATE OF WASHINGTON
28,402
REGISTERED
PROFESSIONAL ENGINEER

Digitally signed by Ron Weigel
Date: 2021.03.12 07:11:01-08'00'

SHEET 16 OF -

WW COLLECTION SYSTEM & WWTF IMPROVEMENTS PROJECT
PLAN/PROFILE STA 50+00 TO 54+00
MARCH 2021

THE CHEHALIS TRIBE

CENTURY WEST ENGINEERING
5500 MEADOWS RD, #250 | LAKE OSWEGO, OR 97035
WWW.CENTURYWEST.COM | 503.419.2130

DESIGNED: R. WEIGEL
DRAWN: S. KELLEY
CHECKED: R. VOORHIES
CWE PROJECT NO. 41445001.01

SCALE
PLAN 1" =40'
PROFILE HORIZ. 1" =40' VERT. 1" =5'
ONE INCH (REF)

NO	DATE	REVISION	BY	APRVD.

FILE Y:\Projects\Chehalis Tribal\STEP - WWTP Project\CAD_WORKING\S Shts 3-17.dwg 03/10/2021 - 9:10am

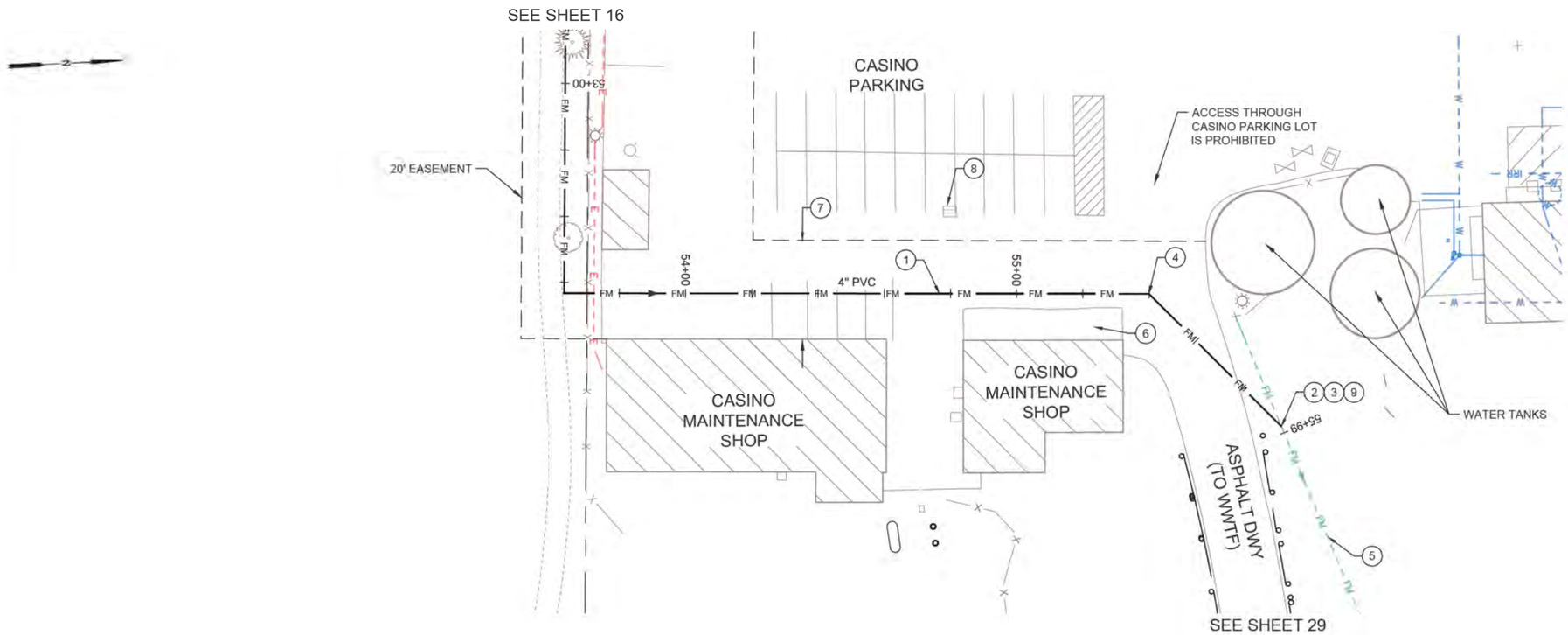

PLAN

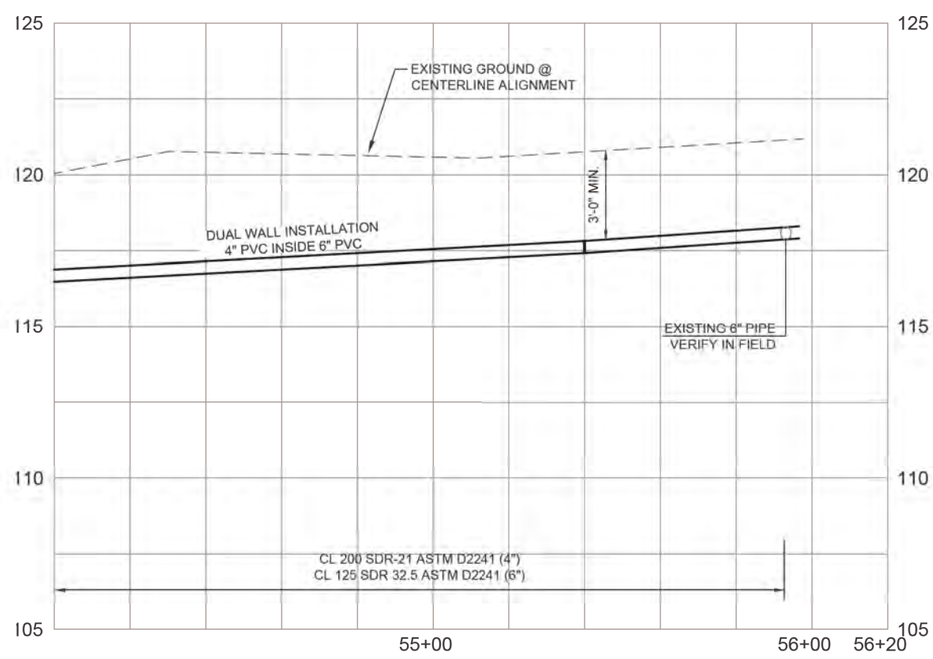

PROFILE

CONSTRUCTION NOTES

1. INSTALL NEW 4" PVC FORCE MAIN.
2. STA 55+95±
   CONNECT TO EXISTING PIPE WITH 4" ISOLATION VALVE, 4" ELBOWS, 4" x 6" REDUCER AND 6" COMPRESSION COUPLINGS VERIFY IN FIELD.
3. EXPOSE EXISTING 6" PVC FORCE MAIN SERVING CASINO PUMP STATIONS (NOT SHOWN). FINAL CONFIGURATION OF FITTINGS WILL NOT BE KNOWN UNTIL PIPE IS EXPOSED.
4. STA 55+40
   INSTALL NEW 4"-45° ELBOW. VERIFY IN FIELD PRIOR TO SAWCUTTING ASPHALT PAVEMENT.
5. EXISTING 6" PVC FORCE MAIN TO WWTF.
6. REMOVE ASPHALT TO EXISTING CONCRETE PAD AND REPLACE. PROTECT CONCRETE DURING CONSTRUCTION.
7. ALL CONSTRUCTION ACTIVITIES TO REMAIN WITHIN 30' TEMPORARY WIDE WORK AREA.
8. PROTECT EXISTING CATCH BASIN WITH EROSION CONTROL MEASURES.
9. END INSTALLATION OF 4" PVC PIPE INSIDE 6" CLASS 125 PVC PIPE 3' WEST OF ELBOW.

SHEET NOTE

1. ACCESS TO ALL CONSTRUCTION ACTIVITIES SHALL BE THROUGH DRIVEWAY TO WWTF.

Digitally signed by Ron Weigel
Date: 2021.03.12 07:11:19-08'00'

RON C. WEIGEL
STATE OF WASHINGTON
28,402
REGISTERED
PROFESSIONAL ENGINEER

SHEET 17 OF -

WW COLLECTION SYSTEM & WWTF IMPROVEMENTS PROJECT
PLAN/PROFILE STA 54+00 TO 55+64
MARCH 2021

THE CHEHALIS TRIBE

CENTURY WEST ENGINEERING
5500 MEADOWS RD. #250 | LAKE OSWEGO, OR 97035
WWW.CENTURYWEST.COM | 503.419.2130

DESIGNED: R. WEIGEL
DRAWN: S. KELLEY
CHECKED: R. VOORHIES
CWE PROJECT NO. 41445001.01

SCALE
PLAN 1" =40'
PROFILE HORIZ. 1" =40' VERT. 1" =5'
ONE INCH (REF)

NO.	DATE	REVISION	BY	APRV'D

FILE: Y:\Projects\Chehalis Tribe\STEP - WWTP Project\CAD_WORKING\Sheet 3-17.dwg 03/10/2021 - 9:13am

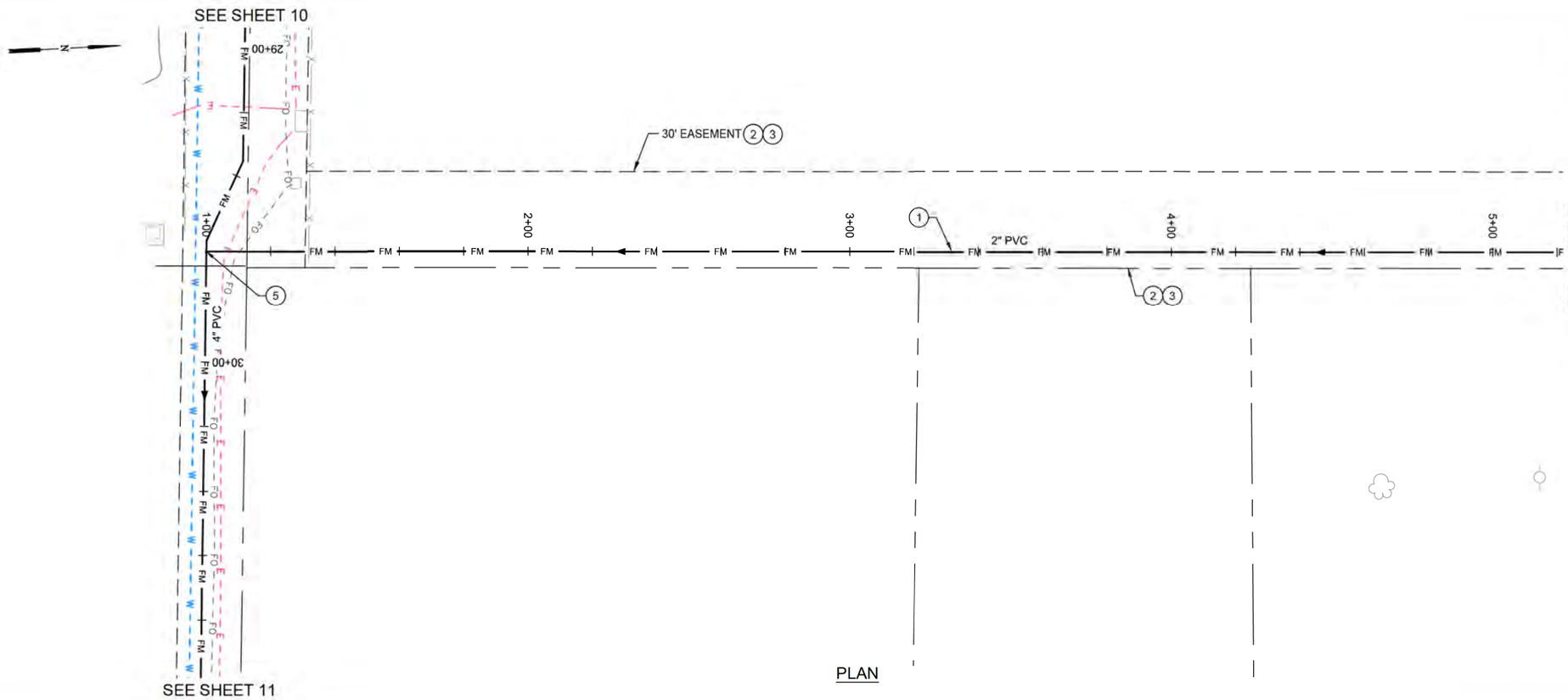

PLAN

CONSTRUCTION NOTES

1. INSTALL NEW 2" PVC FORCE MAIN.
2. ALL CONSTRUCTION ACTIVITIES TO REMAIN WITH 10' EASEMENT. OWNER WILL STAKE LIMITS OF WORK AREA EVERY 100' WITHIN EASEMENT.
3. INSTALL EROSION CONTROL FENCING ALONG BOTH SIDES OF EASEMENT.
4. DEEPEN PIPE INSTALLATION OVER 3' IN THIS AREA TO MINIMIZE HIGH POINT IN LINE.
5. REFER TO DETAIL 1 ON SHEET 10 FOR CONNECTION.

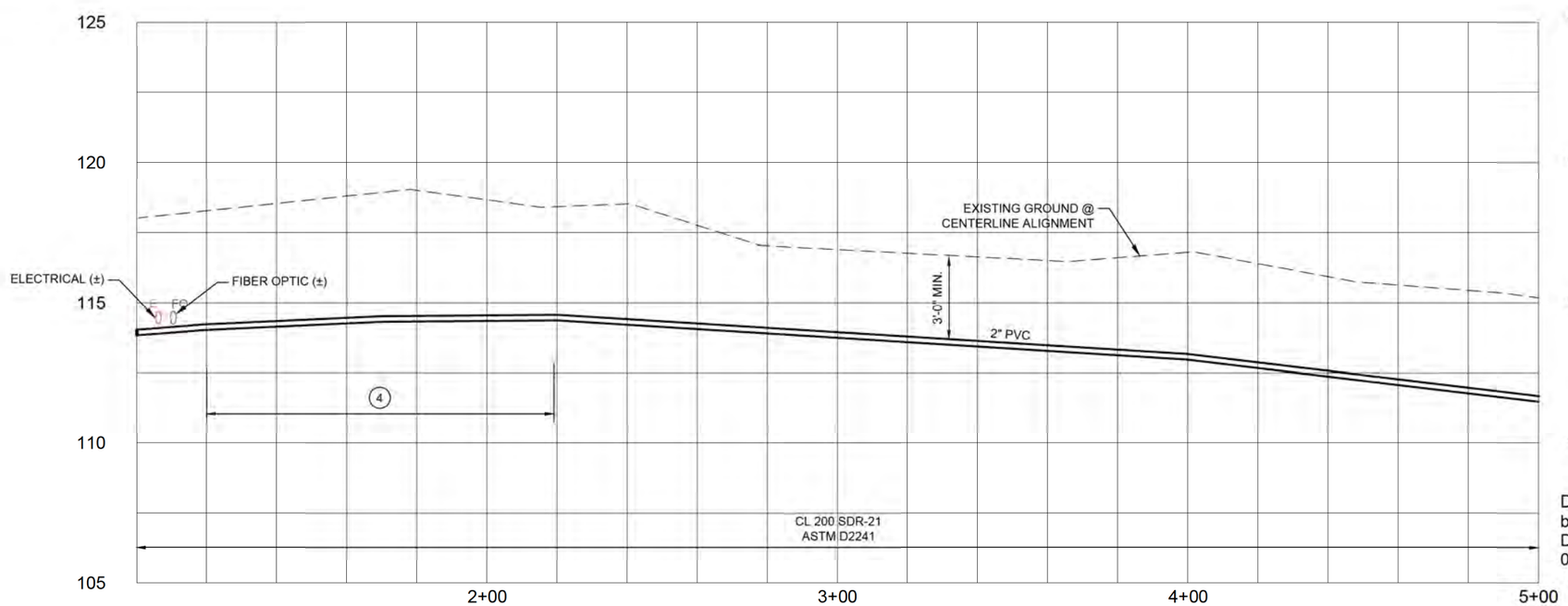

PROFILE

Digitally signed by Ron Weigel
Date: 2021.03.12 07:29:20-08'00'

RON C. WEIGEL
STATE OF WASHINGTON
28,402
REGISTERED
PROFESSIONAL ENGINEER

SHEET 18 OF -

WW COLLECTION SYSTEM & WWTF IMPROVEMENTS PROJECT

PLAN/PROFILE STA 1+00 TO 5+00

MARCH 2021

THE CHEHALIS TRIBE

CENTURY WEST ENGINEERING
5500 MEADOWS RD, #250 | LAKE OSWEGO, OR 97035
WWW.CENTURYWEST.COM | 503.419.2121

DESIGNED: R. WEIGEL
DRAWN: S. KELLEY
CHECKED: R. VOORHIES
CWE PROJECT NO. 41445001.01

SCALE
PLAN 1" =40'
PROFILE HORIZ. VERT.
ONE INCH (REF)

NO.	DATE	REVISION	BY	APRV'D

FILE: Y:\Projects\Chehalis Tribe\STEP - WWTP Project\CADD_WORKING Sta 15-25.dwg 03/08/2021 - 10:19am

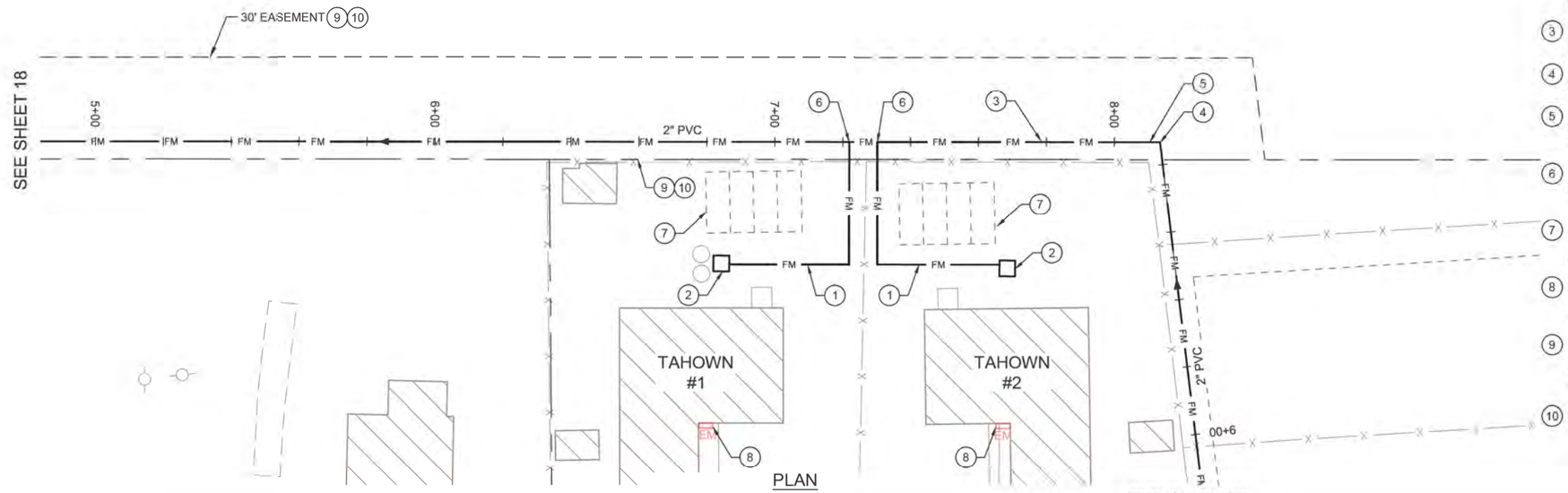

PLAN

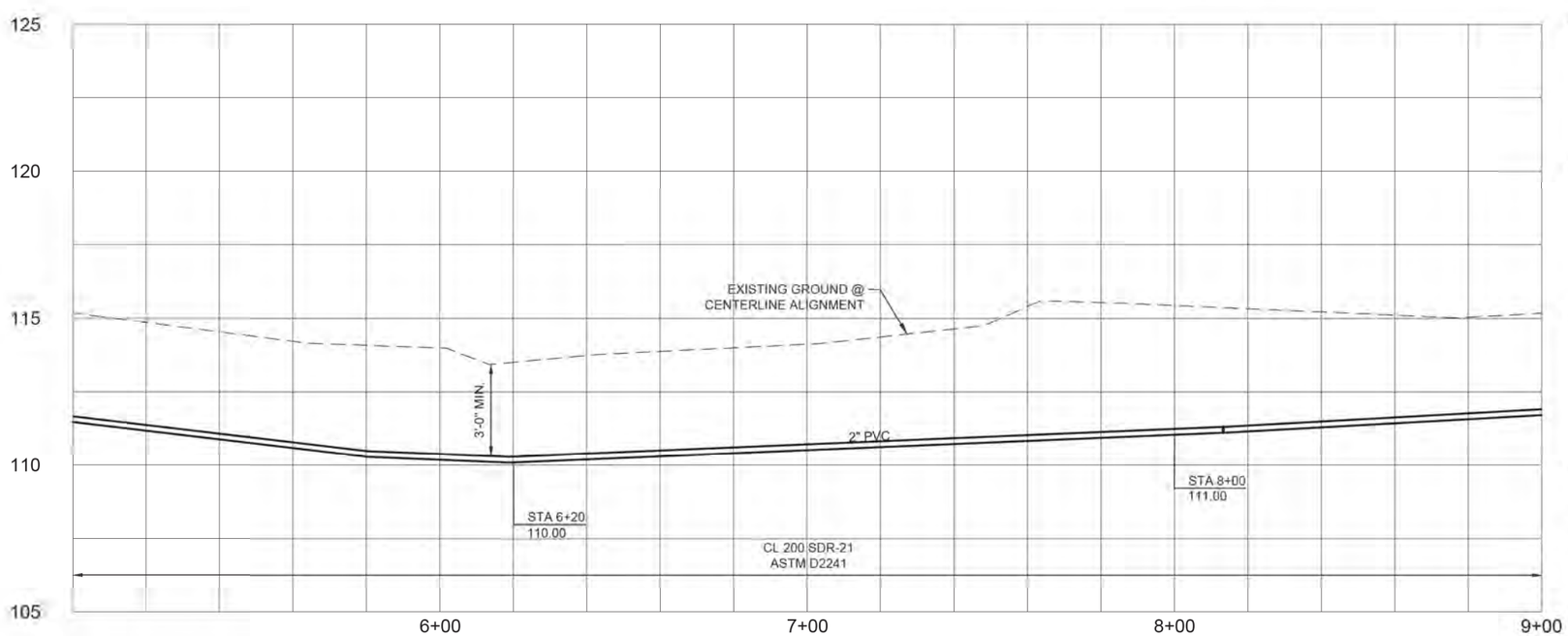

PROFILE

CONSTRUCTION NOTES

1. INSTALL NEW 1-1/4" PVC EFFLUENT FORCE MAIN. APPROXIMATE LOCATIONS SHOWN. FINAL LOCATION OF PIPE AND FITTINGS TO BE DETERMINED IN FIELD AND DOCUMENTED FOR RECORD DRAWINGS.
2. INSTALL NEW PUMP IN EXISTING SEPTIC TANK EFFLUENT CHAMBER. CONFIRM LOCATION IN FIELD AND INSTALL PER MANUFACTURER RECOMMENDATIONS. SEE SHEET 54 FOR TYPICAL ELECTRICAL REQUIREMENTS AT RESIDENT FOR POWER HOOKUP.
3. INSTALL NEW 2" PVC EFFLUENT FORCE MAIN.
4. STA 8+13
   INSTALL 2" PVC 90° ELBOW
5. INSTALL IN-LINE PIG PORT 3' DOWNSTREAM OF ELBOW. REFER TO DETAIL ON SHEET 27.
6. INSTALL 1-1/4" EFFLUENT SERVICE CONNECTION. REFER TO DETAIL ON SHEET 27.
7. APPROXIMATE LIMITS EXISTING DRAIN FIELD BEDS. PROTECT DURING INSTALLATION OF NEW EFFLUENT PIPE.
8. APPROXIMATE LOCATION OF EXISTING ELECTRICAL METER ON OUTSIDE OF BUILDING.
9. ALL CONSTRUCTION ACTIVITIES TO REMAIN WITH 10' EASEMENT. OWNER WILL STAKE LIMITS OF WORK AREA EVERY 100' WITHIN EASEMENT.
10. INSTALL EROSION CONTROL FENCING ALONG BOTH SIDES OF EASEMENT.

Digitally signed by Ron Weigel
Date: 2021.03.12 07:29:35-08'00'

RON C. WEIGEL
STATE OF WASHINGTON
28,402
REGISTERED
PROFESSIONAL ENGINEER

SHEET 19 OF -

WW COLLECTION SYSTEM & WWTF IMPROVEMENTS PROJECT

PLAN/PROFILE STA 5+00 TO 9+00

MARCH 2021

THE CHEHALIS TRIBE

CENTURY WEST ENGINEERING
5500 MEADOWS RD. #250 | LAKE OSWEGO, OR 97035
WWW.CENTURYWEST.COM | 503.419.2130

DESIGNED: R. WEIGEL
DRAWN: S. KELLEY
CHECKED: R. VOORHIES
CWE PROJECT NO. 41445001.01

SCALE
PLAN 1" =40'
PROFILE HORIZ. VERT.
ONE INCH (REF)

NO.	DATE	REVISION	BY	APRVD.

FILE: Y:\Projects\Chehalis Trust\STEP - WWTP Project\CAD_WORKING\Sht\ 15-25.dwg 03/08/2021 - 10:34am

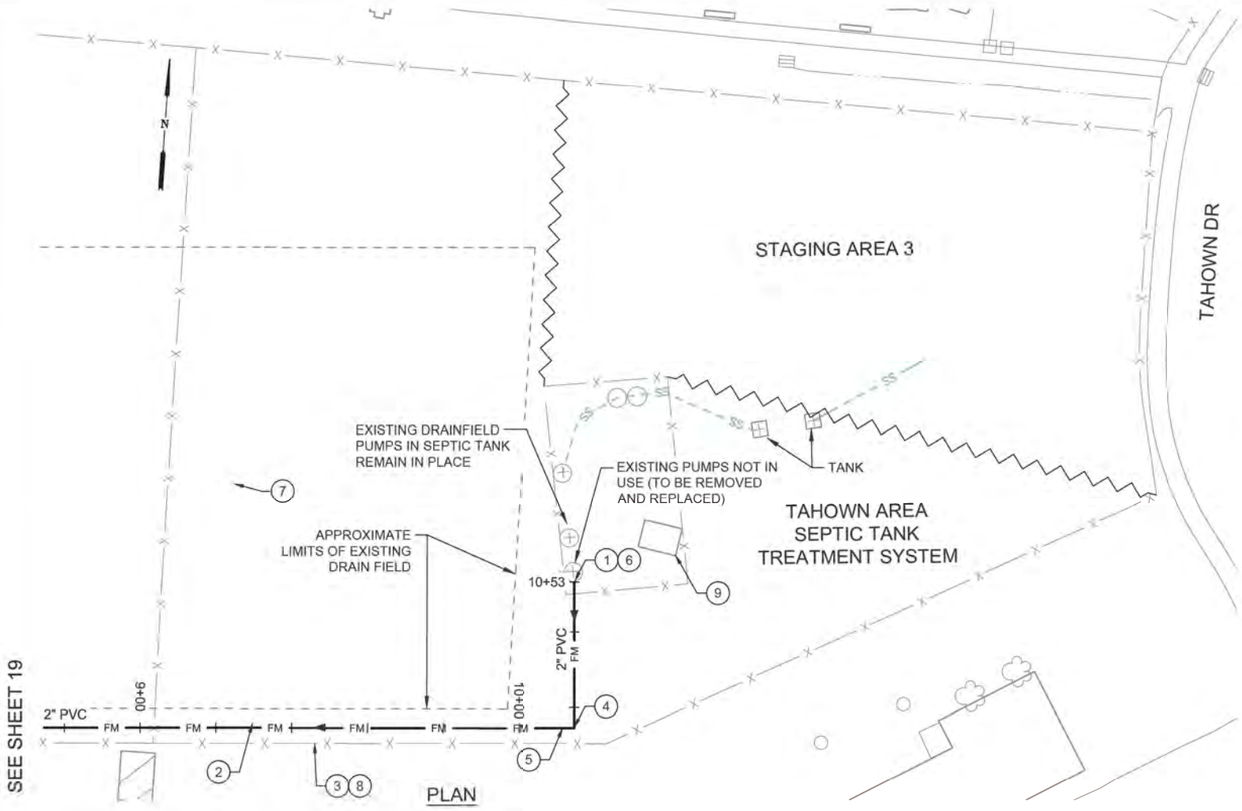

PLAN

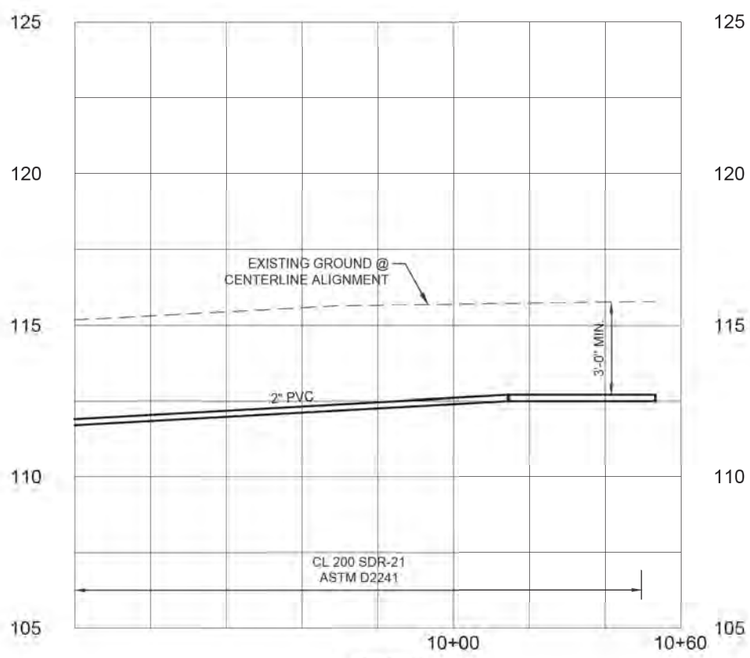

PROFILE

CONSTRUCTION NOTES

1. INSTALL NEW DUPLEX PUMP STATION. SEE SHEET 41 FOR ELECTRICAL REQUIREMENTS.
2. INSTALL NEW 2" PVC EFFLUENT FORCE MAIN.
3. NEW EFFLUENT FORCE MAIN TO BE INSTALLED APPROXIMATELY 4' NORTH OF EXISTING FENCE. REMOVE AND REPLACE FOLLOWING CONSTRUCTION.
4. STA 10+15 INSTALL 2" PVC 90° ELBOW
5. INSTALL IN-LINE PIG PORT 3' DOWNSTREAM OF ELBOW. REFER TO DETAIL ON SHEET 27.
6. REMOVE EXISTING PUMP, VALVES, AND FITTINGS. INSTALL 2" PVC EFFLUENT PIPING THROUGH WALL ON SOUTH SIDE OF FACILITY.
7. INSTALL EROSION CONTROL FENCING ALONG BOTH SIDES OF EASEMENT.
8. INSTALL EROSION CONTROL FENCING ALONG WORK AREA WHERE SHOWN.
9. INSTALL ELECTRICAL CONTROLS. REFER TO SHEET 41 FOR ADDITIONAL INFORMATION.

SCALE: N.T.S. 1/20

SCALE: N.T.S. 2/20

SCALE: N.T.S. 3/20

Digitally signed by Ron Weigel
Date: 2021.03.12 07:29:52-08'00'

RON C. WEIGEL
STATE OF WASHINGTON
28,402
REGISTERED PROFESSIONAL ENGINEER

SHEET 20 OF -

WW COLLECTION SYSTEM & WWTF IMPROVEMENTS PROJECT
PLAN/PROFILE STA 9+00 TO 10+44
MARCH 2021

THE CHEHALIS TRIBE

CENTURY WEST ENGINEERING
5500 MEADOWS RD. #250 | LAKE OSWEGO, OR 97035
WWW.CENTURYWEST.COM | 503.419.2130

DESIGNED: R. WEIGEL
DRAWN: S. KELLEY
CHECKED: R. VOORHIES
CWE PROJECT NO. 41445001.01

SCALE
PLAN 1" =40'
PROFILE HORIZ. VERT.
ONE INCH (REF)

NO.	DATE	REVISION	BY	APRVD.

FILE: Y:\Projects\Chehalis Tribe\STEP - WWTP Project\CADD_WORKING\ Sits 18-25.dwg 03/08/2021 - 10:36am

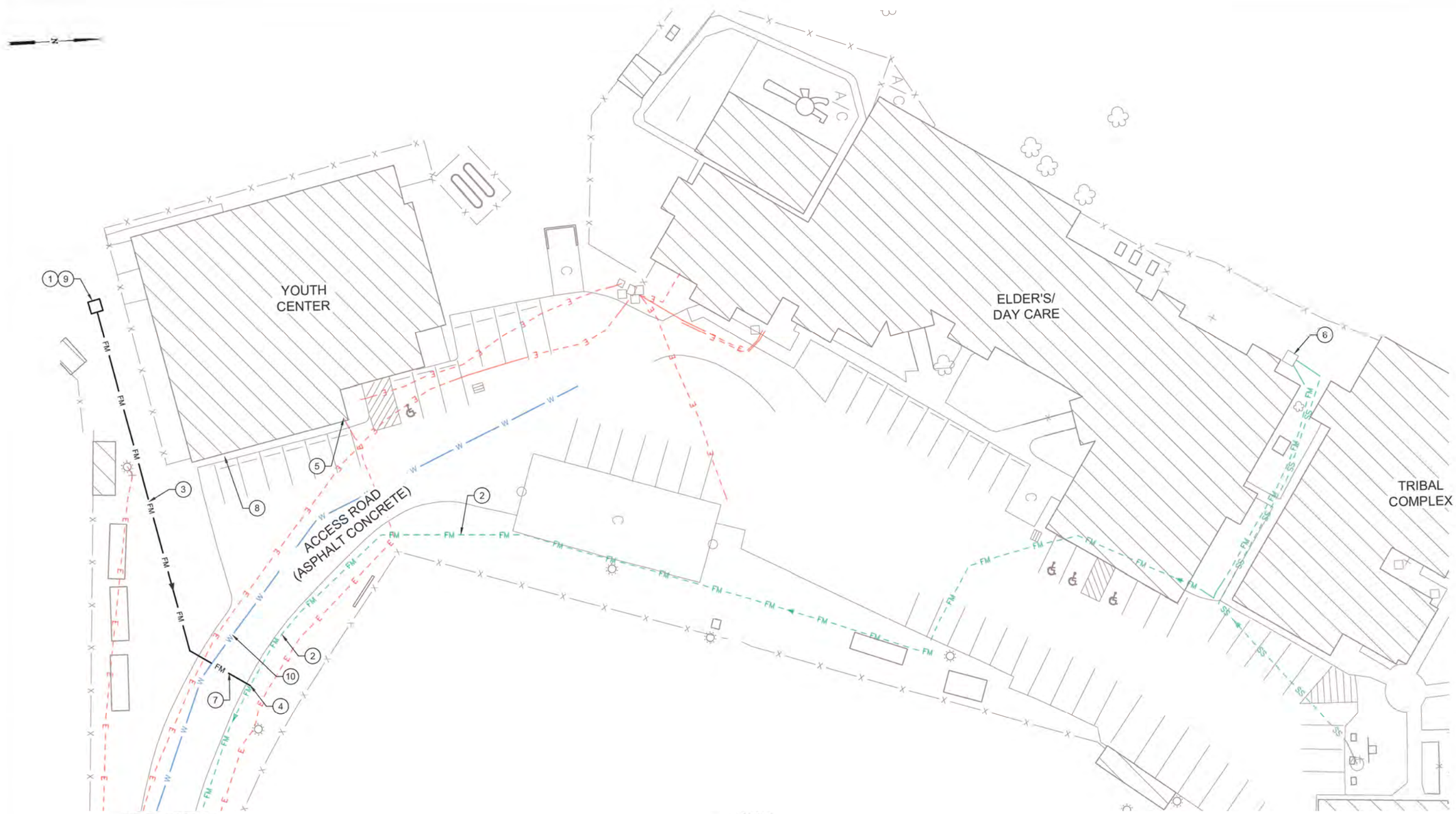

PLAN

CONSTRUCTION NOTES

1. INSTALL NEW PUMP IN EXISTING SEPTIC TANK EFFLUENT CHAMBER. CONFIRM LOCATION IN FIELD AND INSTALL PER MANUFACTURER RECOMMENDATION. SEE SHEET 54 FOR TYPICAL ELECTRICAL REQUIREMENTS FOR POWER HOOKUP.
2. EXISTING 1-1/2" PVC EFFLUENT FORCE MAIN.
3. INSTALL NEW 1-1/4" PVC EFFLUENT FORCE MAIN. FINAL LOCATION OF PIPE AND FITTINGS TO BE DETERMINED IN FIELD AND DOCUMENTED FOR RECORD DRAWINGS.
4. INSTALL 1-1/4" EFFLUENT SERVICE CONNECTION. REFER TO DETAIL ON SHEET 27.
5. APPROXIMATE LOCATION OF NEW ELECTRICAL CONNECTION. EXTEND CONNECTION THROUGH EXTERIOR WALL OF BUILDING.
6. EXISTING PUMP STATION REMAINS IN SERVICE.
7. INSTALL 3" PVC CASING ACROSS ROAD FOR SERVICE. L = 25'
8. INSTALL NEW ELECTRICAL CONDUIT BETWEEN BUILDING AND EDGE OF ASPHALT PARKING STRIP.
9. REFER TO SHEET 28 FOR TYPICAL SIMPLEX PUMP STATION DETAILS IN SEPTIC TANK.
10. EXISTING 6" PVC WATERLINE EXTENDS FROM NIEDEMAN ROAD. LOCATION SHOWN IN THIS AREA WAS NOT VERIFIED DURING DESIGN.

Digitally signed by Ron Weigel
Date: 2021.03.12 07:30:07-08'00'

RON C. WEIGEL
STATE OF WASHINGTON
28,402
REGISTERED
PROFESSIONAL ENGINEER

SHEET 21 OF -

WW COLLECTION SYSTEM & WWTF IMPROVEMENTS PROJECT
NON-RESIDENTIAL PUMP STATION PLAN
MARCH 2021

THE CHEHALIS TRIBE

CENTURY WEST ENGINEERING
5500 MEADOWS RD. #250 | LAKE OSWEGO, OR 97035
WWW.CENTURYWEST.COM | 503.419.2130

DESIGNED: R. WEIGEL
DRAWN: S. KELLEY
CHECKED: R. VOORHIES
CWE PROJECT NO. 41445001.01

SCALE
PLAN 1" =40'
PROFILE HORIZ. VERT.
ONE INCH (REF)

NO.	DATE	REVISION	BY	APRV'D.

FILE: Y:\Projects\Chehalis Tribe\STEP - WWTP Project\CADD_WORKING\Sits 16-25.dwg 03/08/2021 - 12:40pm

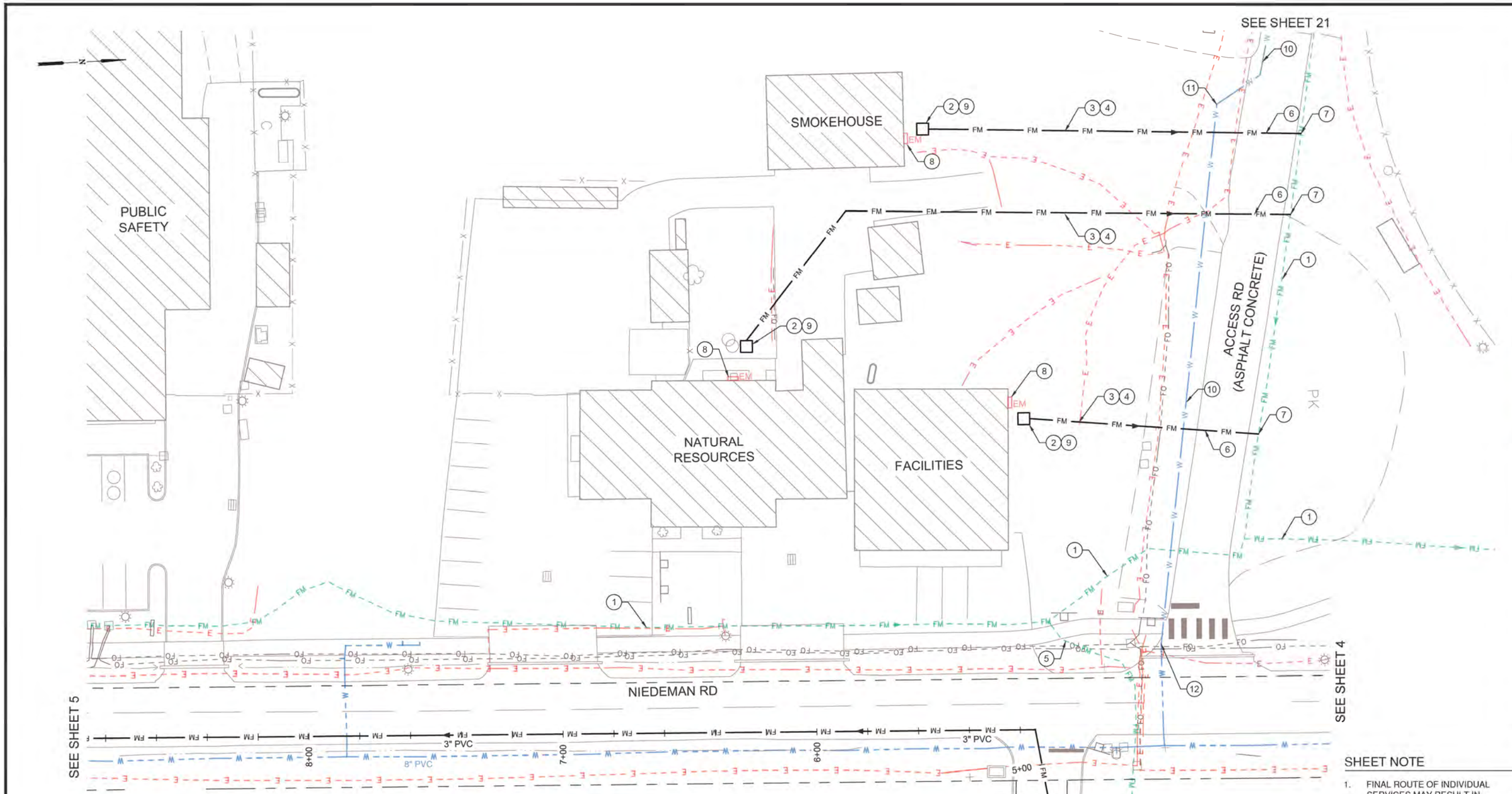

CONSTRUCTION NOTES

1. EXISTING 1-1/2" PVC EFFLUENT PIPE REMAINS IN SERVICE.
2. INSTALL NEW PUMP IN EXISTING SEPTIC TANK EFFLUENT CHAMBER. CONFIRM LOCATION IN FIELD AND INSTALL PER MANUFACTURER RECOMMENDATION. SEE SHEET 54 FOR TYPICAL ELECTRICAL REQUIREMENTS AT RESIDENT FOR POWER HOOKUP.
3. INSTALL 1-1/4" PVC EFFLUENT FORCE MAIN FROM NEW PUMP STATION TO EXISTING PIPE. APPROXIMATE LOCATIONS SHOWN. CONNECT TO EXISTING PIPE WITH REQUIRED FITTINGS.
4. EXISTING TREES ARE NOT SHOWN BETWEEN BUILDINGS AND ACCESS ROAD. LAYOUT NEW PIPE IN LOCATION THAT WILL REQUIRE THE FEWEST POSSIBLE TREES TO BE REMOVED. FINAL LOCATION OF PIPE AND FITTINGS TO BE DETERMINED IN FIELD AND DOCUMENTED FOR RECORD DRAWINGS.
5. ABANDON EXISTING 1-1/2" PVC PIPE.
6. INSTALL 3" PVC CASING ACROSS ROAD FOR EACH SERVICE. L = 25'
7. INSTALL 1-1/4" EFFLUENT SERVICE CONNECTION. REFER TO DETAIL SHEET 27.
8. APPROXIMATE LOCATION OF EXISTING ELECTRICAL METER ON OUTSIDE OF BUILDING.
9. REFER TO SHEET 28 FOR TYPICAL SIMPLEX PUMP STATION DETAILS IN SEPTIC TANK.
10. EXISTING 6" PVC WATERLINE EXTENDS FROM NIEDEMAN ROAD LOCATION SHOWN IN THIS AREA WAS NOT VERIFIED. CONTRACTOR SHOULD SEARCH FOR EXISTING GATE VALVE IDENTIFIED IN NOTE 11 AS A GUIDE TO ESTIMATE LOCATION OF PIPE BACK TO NIEDEMAN ROAD.
11. APPROXIMATE LOCATION OF EXISTING 6" GATE VALVE.
12. END OF WATERLINE LOCATED DURING DESIGN. REFER TO NOTE 10 FOR LOCATING PIPE WESTERLY ON ACCESS ROAD.

PLAN

SHEET NOTE

1. FINAL ROUTE OF INDIVIDUAL SERVICES MAY RESULT IN COMBINING TWO OR THREE INTO A COMMON TRENCH EXTENDING TO ACCESS ROAD. CONTRACTOR SHALL BE COMPENSATED FOR A SINGLE TRENCH PAYMENT PLUS MATERIAL COSTS ONLY FOR THE ADDITIONAL PIPING IN SAID TRENCH.

WELLNESS CENTER

Digitally signed by Ron Weigel
Date: 2021.03.12 07:30:21 -08'00'

RON C. WEIGEL
STATE OF WASHINGTON
28,402
REGISTERED PROFESSIONAL ENGINEER

SHEET 22 OF -

WW COLLECTION SYSTEM & WWTF IMPROVEMENTS PROJECT
NON-RESIDENTIAL PUMP STATIONS PLAN
MARCH 2021

THE CHEHALIS TRIBE

CENTURY WEST ENGINEERING
5500 MEADOWS RD. #250 | LAKE OSWEGO, OR 97035
WWW.CENTURYWEST.COM | 503.419.2130

DESIGNED: R. WEIGEL
DRAWN: S. KELLEY
CHECKED: R. VOORHIES
CWE PROJECT NO. 41445001.01

SCALE
PLAN 1" =40'
PROFILE HORIZ. VERT.
ONE INCH (REF.)

NO.	DATE	REVISION	BY	APRVD.

FILE: Y:\Projects\Chehalis Tribe\STEP - WWTP Project\CADD_WORKING\ Sht 18-25.dwg 03/09/2021 - 7:08am

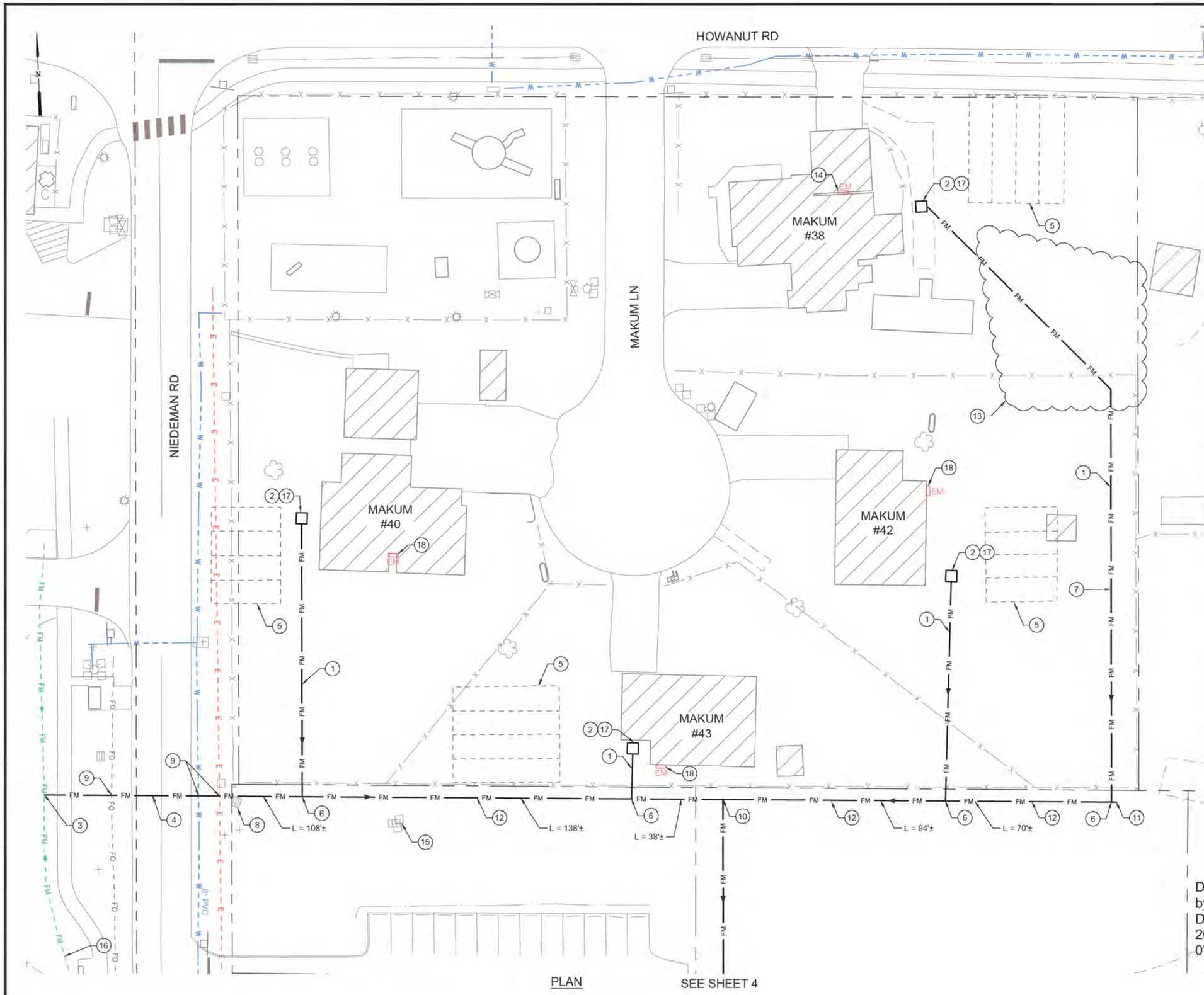

CONSTRUCTION NOTES

1. INSTALL NEW 1-1/4" PVC EFFLUENT FORCE MAIN. APPROXIMATE LOCATIONS SHOWN. FINAL LOCATION OF PIPE AND FITTINGS TO BE DETERMINED IN FIELD AND DOCUMENTED FOR RECORD DRAWINGS.
2. INSTALL NEW PUMP IN EXISTING SEPTIC TANK EFFLUENT CHAMBER. CONFIRM LOCATION IN FIELD AND INSTALL PER MANUFACTURER RECOMMENDATION. SEE SHEET 54 FOR TYPICAL ELECTRICAL REQUIREMENTS AT RESIDENT FOR POWER HOOKUP.
3. CONNECT TO EXISTING 1-1/2" FORCE MAIN WITH NEW 2" PVC PIPE AND REQUIRED FITTINGS.
4. INSTALL 6" PVC CASING ACROSS NIEDEMAN ROAD. L = 40'
5. APPROXIMATE LIMITS EXISTING DRAINFIELD PROTECT DURING INSTALLATION OF NEW EFFLUENT PIPE.
6. INSTALL 1-1/4" EFFLUENT SERVICE CONNECTION. REFER TO DETAIL ON SHEET 27. FINAL LOCATION TO BE DETERMINED IN FIELD. GENERAL LAYOUT SHOWN.
7. INSTALL PARALLEL TO AND 10' +/- WEST OF EXISTING FENCE LINE.
8. PROTECT EXISTING DRAINAGE INLET. LAYOUT NEW PIPE AS REQUIRED TO MISS STRUCTURE.
9. POTHOLE UTILITY AND/OR WATERLINE AND INSTALL NEW PIPE WITH MINIMUM 1' BELOW BOTTOM OF STRUCTURE. (D = 3' MIN).
10. INSTALL IN-LINE PIG PORT 3' DOWNSTREAM OF TEE. REFER TO DETAIL ON SHEET 27.
11. INSTALL 2" WITH 1-1/4" SERVICE FROM MAKUM #38 CONNECTED ON BRANCH. PROVIDE CLEANOUT ON 2' PVC PIPE EAST OF TEE. REFER TO DETAIL ON SHEET 27.
12. INSTALL NEW 2" PVC EFFLUENT FORCE MAIN APPROXIMATELY 5' SOUTH OF FENCE LINE.
13. SEVERAL LARGE TREES ARE PRESENT IN THIS AREA WITH SUFFICIENT SPACE TO INSTALL PIPE. FINAL ROUTE MAY VARY SLIGHTLY FROM THAT SHOWN TO MISS TREES.
14. APPROXIMATE LOCATION OF EXISTING ELECTRICAL METER ON OUTSIDE WALL. NARROW SPACE PREVENTS USE OF EXCAVATION EQUIPMENT MAKING HAND WORK NECESSARY IN THIS AREA.
15. PROTECT EXISTING MONITORING WELL.
16. EFFLUENT PIPE FROM PUBLIC SERVICES PUMP STATION AND OTHERS. REFER TO SHEETS 5 AND 22 FOR CONTINUATION.
17. REFER TO SHEET 28 FOR TYPICAL SIMPLEX PUMP STATION DETAILS IN SEPTIC TANK.
18. APPROXIMATE LOCATION OF EXISTING METER ON OUTSIDE WALL.

Digitally signed by Ron Weigel
Date: 2021.03.12 07:30:39-08'00'

RON C. WEIGEL
STATE OF WASHINGTON
28,402
REGISTERED
PROFESSIONAL ENGINEER

SHEET 23 OF -

WW COLLECTION SYSTEM & WWTF IMPROVEMENTS PROJECT
MAKUM LANE PUMP STATIONS PLAN
MARCH 2021

THE CHEHALIS TRIBE

CENTURY WEST ENGINEERING
5500 MEADOWS RD. #250 | LAKE OSWEGO, OR 97035
WWW.CENTURYWEST.COM | 503.419.2130

DESIGNED: R. WEIGEL
DRAWN: S. KELLEY
CHECKED: R. VOORHIES
CWE PROJECT NO. 41445001.01

SCALE
PLAN 1" =40'
PROFILE HORIZ. VERT.
ONE INCH (REF.)

NO.	DATE	REVISION	BY	APRVD.

FILE: Y:\Projects\Chehalis Tribe\STEP - WWTP Project\CAD_WD\RAKKN Sits 18-25.dwg 03/09/2021 - 7:30am

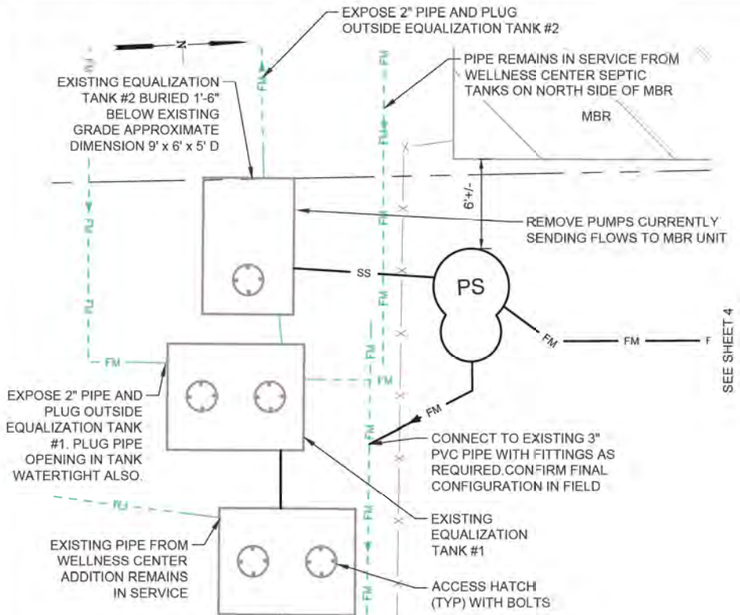

PLAN

SCALE: N.T.S.

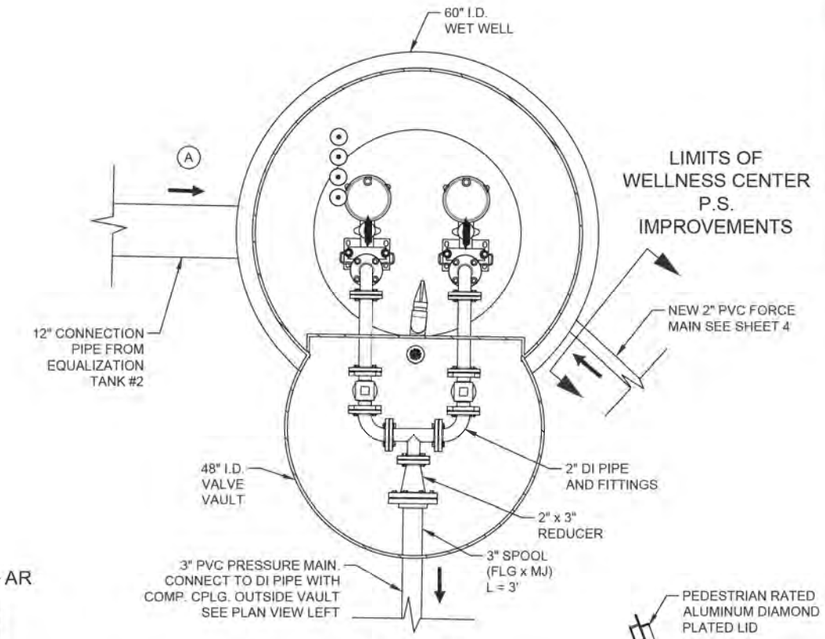

SECTION AT-AT

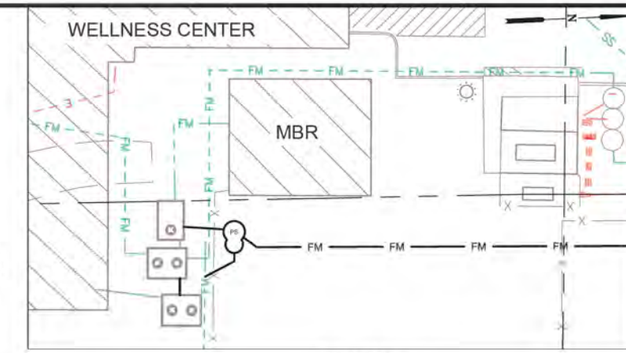

KEY MAP

SCALE: N.T.S.

SHEET NOTES

1. ALL STAINLESS STEEL (S.S.) PIPE, FITTINGS, AND FASTENERS SHALL BE TYPE 316.
2. ALL DUCTILE IRON PIPE AND FITTINGS SHALL HAVE EPOXY COATING ON OUTSIDE AND PROTECTO 401 ON INSIDE.
3. REFER TO DETAIL 1 SHEET 25 FOR VIEW OF ACCESS HATCHES TO EXISTING FLOW EQUALIZATION TANKS AND SEPTIC TANK.

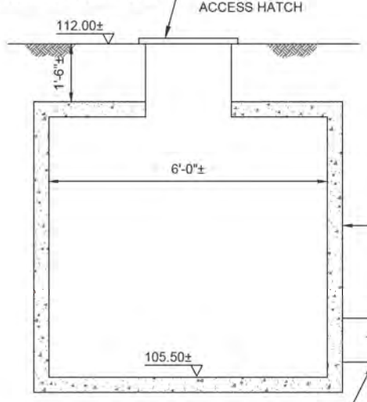

EXISTING EQUALIZATION TANK #1 SECTION

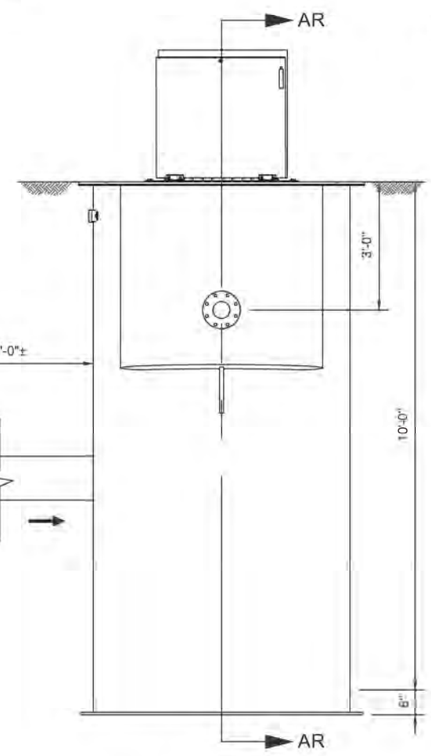

PUMP STATION SIDE VIEW

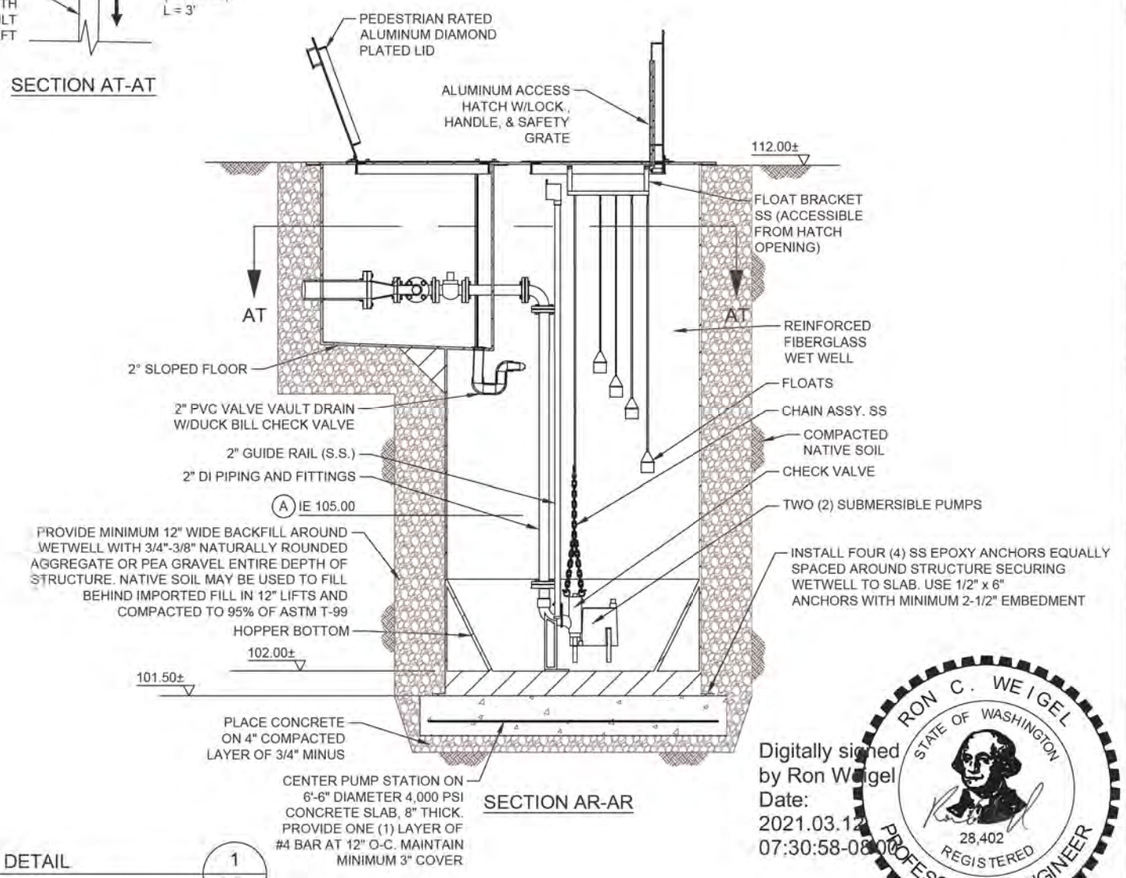

SECTION AR-AR

Digitally signed by Ron Weigel
Date: 2021.03.12 07:30:58-08'00'

RON C. WEIGEL
STATE OF WASHINGTON
28,402
REGISTERED
PROFESSIONAL ENGINEER

PUMP STATION DETAIL

SCALE: N.T.S.

1 / 24

SHEET 24 OF -

WW COLLECTION SYSTEM & WWTF IMPROVEMENTS PROJECT
WELLNESS CENTER PUMP STATION
MARCH 2021

THE CHEHALIS TRIBE

CENTURY WEST ENGINEERING
5500 MEADOWS RD. #250 | LAKE OSWEGO, OR 97035
WWW.CENTURYWEST.COM | 503.419.2130

DESIGNED: R. WEIGEL
DRAWN: S. KELLEY
CHECKED: R. VOORHIES
CWE PROJECT NO. 41445001.01

SCALE: PLAN 1" =40'; HORIZ.; PROFILE VERT.; ONE INCH (REF)

NO.	DATE	REVISION	BY	APRVD.

FILE: Y:\Projects\Chehalis Tribe\STEP - WWTP Project\CAD_WORKING\ Sht 18-25.dwg 03/12/2021 - 7:18am

SCALE: N.T.S. 1/25

SCALE: N.T.S. 2/25

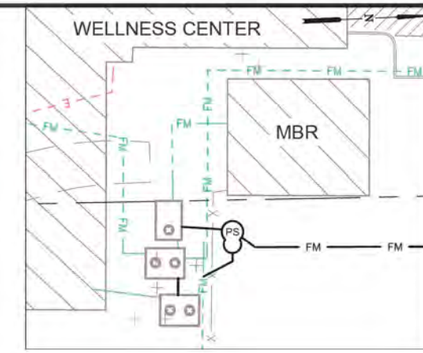

PLAN

SCALE: N.T.S. 3/25

SCALE: N.T.S. 4/25

SCALE: N.T.S. 5/25

SCALE: N.T.S. 6/25

SCALE: N.T.S. 7/25

SHEET NOTES

1. DISCONNECT AND REMOVE EXISTING PUMP WIRING, CONDUITS, CONTROL PANELS, METERING/MONITORING EQUIPMENT AND MISCELLANEOUS THAT OPERATE THE MBR UNIT BACK TO THE EXISTING ELECTRICAL PANELBOARDS. REMOVE ALL EQUIPMENT AND MISCELLANEOUS FEATURES INSIDE THE MBR UNIT PRIOR TO FILLING WITH IMPORTED SAND/CRUSHED ROCK AND TOPPED WITH 4" CONCRETE SLAB FLUSH WITH EXISTING FLOOR.
2. BREAK UP BOTTOM CONCRETE SLAB IN SEVERAL PLACES PRIOR TO BACKFILLING.

Digitally signed by Ron Weigel
Date: 2021.03.12 07:31:14-08'00'

RON C. WEIGEL
STATE OF WASHINGTON
28,402
REGISTERED
PROFESSIONAL ENGINEER

SHEET 25 OF -

WW COLLECTION SYSTEM & WWTF IMPROVEMENTS PROJECT
WELLNESS CENTER MBR DEMOLITION
MARCH 2021

THE CHEHALIS TRIBE

CENTURY WEST ENGINEERING
5500 MEADOWS RD. #250 | LAKE OSWEGO, OR 97035
WWW.CENTURYWEST.COM | 503.419.2130

DESIGNED: R. WEIGEL
DRAWN: S. KELLEY
CHECKED: R. VOORHIES
CWE PROJECT NO. 41445001.01

SCALE
PLAN 1" =40'
HORIZ.
PROFILE VERT.
ONE INCH (REF)

NO.	DATE	REVISION	BY	APRV'D.

FILE: Y:\Projects\Chehalis Tribe\STEP - WWTP Project\CAD_WORKING\Sheet 15-25.dwg 03/11/2021 - 7:16am

SHEET NOTES

1. APPROXIMATE INTERIOR CONCRETE WETWELL DIMENSIONS.
   D = 8'-0"
   H = 8'-6"
2. REMOVE BOTH PUMPS FOR SURFACE PREPARATION OF WETWELL FLOOR, WALLS AND CEILING FOR INSTALLATION OF APPROVED COATING SYSTEM. PROVIDE TEMPORARY BYPASS PUMPS WITH STANDBY GENERATOR TO TRANSFER ALL FLOWS (UP TO 50 GPM) TO EXISTING DISCHARGE PRESSURE MAIN DOWNSTREAM OF PUMP STATION. CONNECTION POINT UP TO CONTRACTOR.
3. REFER TO ELECTRICAL SHEET 41 FOR ADDITIONAL INFORMATION ON THIS PUMP STATION REHAB.
4. ALL WORK ON THIS SHEET IS IDENTIFIED AS ADDITIVE ALTERNATE A IN THE BID SCHEDULE.

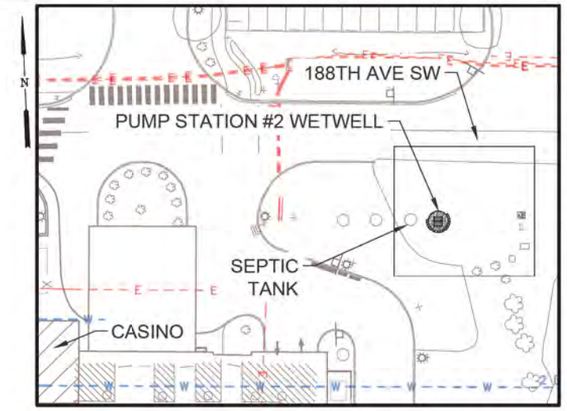

KEY MAP
SCALE: N.T.S.

SCALE: N.T.S. 1/26

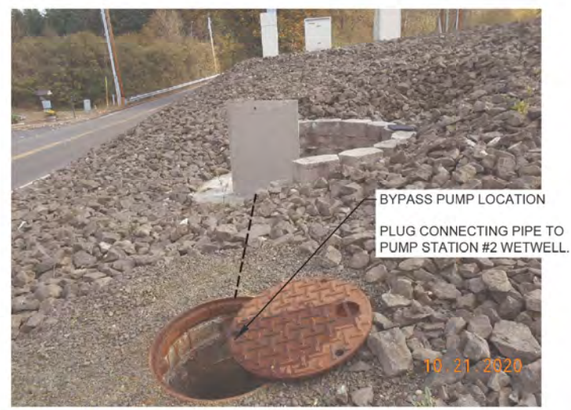

SCALE: N.T.S. 2/26

SCALE: N.T.S. 3/26

SCALE: N.T.S. 4/26

SCALE: N.T.S. 5/26

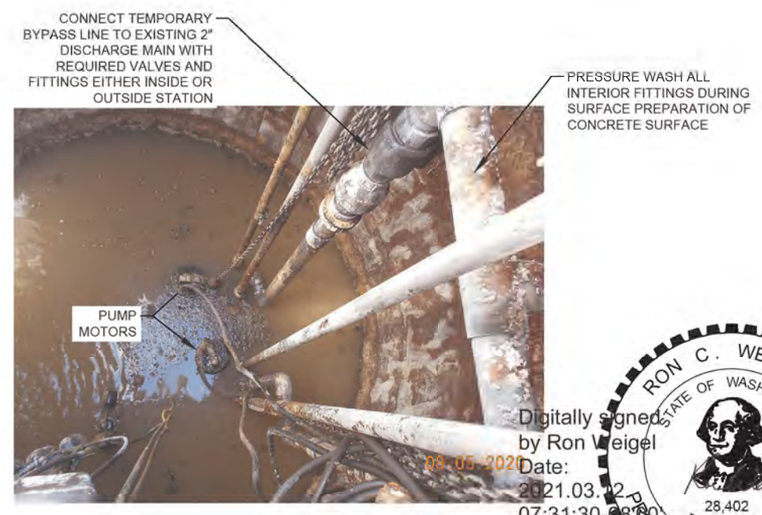

SCALE: N.T.S. 6/26

Digitally signed by Ron Weigel
Date: 2021.03.12 07:31:30-08'00'

RON C. WEIGEL
STATE OF WASHINGTON
28,402
REGISTERED PROFESSIONAL ENGINEER

SHEET 26 OF -

WW COLLECTION SYSTEM & WWTF IMPROVEMENTS PROJECT
PS #2 WETWELL REHABILITATION
MARCH 2021

THE CHEHALIS TRIBE

CENTURY WEST ENGINEERING
5500 MEADOWS RD. #250 | LAKE OSWEGO, OR 97035
WWW.CENTURYWEST.COM | 503.419.2130

DESIGNED: R. WEIGEL
DRAWN: S. KELLEY
CHECKED: R. VOORHIES
CWE PROJECT NO. 41445001.01

SCALE
PLAN 1" = 10'
PROFILE HORIZ. VERT.
ONE INCH (REF.)

NO.	DATE	REVISION	BY	APRVD

FILE Y:\Projects\Chehalis Tribe\STEP - WWTP Project\CADD_WORKING\ Sht 25-34.dwg 03/08/2021 - 12:00pm

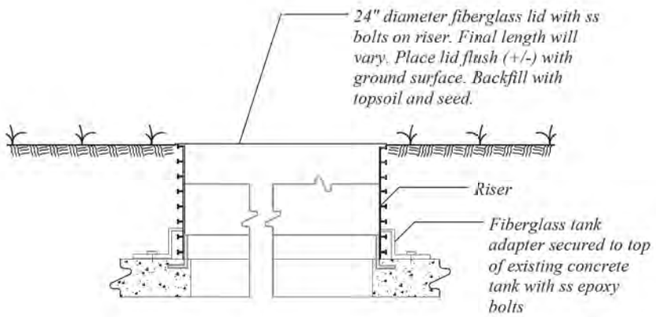

Concrete Tank Adapter Detail

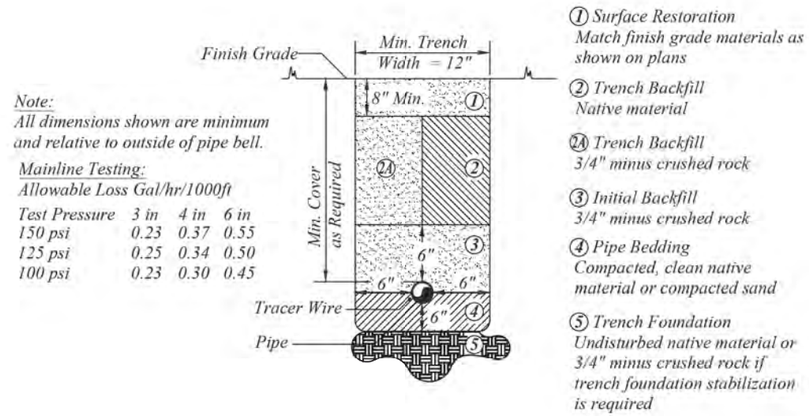

Note:
All dimensions shown are minimum and relative to outside of pipe bell.

Mainline Testing:
Allowable Loss Gal/hr/1000ft

Test Pressure	3 in	4 in	6 in
150 psi	0.23	0.37	0.55
125 psi	0.25	0.34	0.50
100 psi	0.23	0.30	0.45

Typical Sewer Trench Details

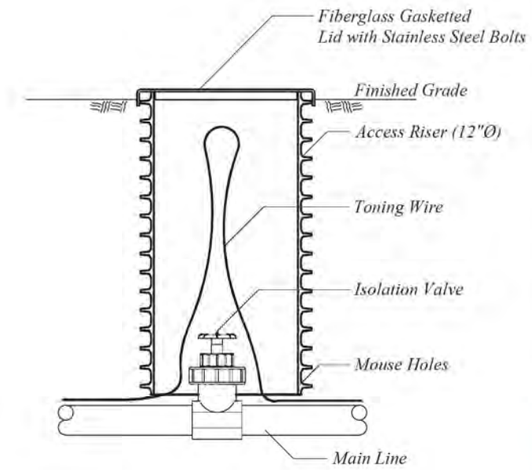

Isolation Valve Detail

In-Line Pig Port + Clean-Out Component Sizing			
Force Main Dia.	Screw Cap Dia.	Valve & Fittings Dia.	Access Riser & Lid Dia.
2"	3"	2"	30"
3"	4"	3"	30"
4"	6"	4"	30"
6"	8"	6"	30"

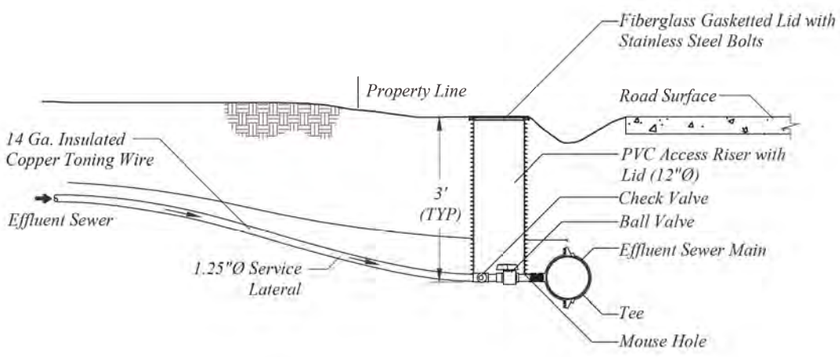

Effluent Sewer Service Connection (Typ)

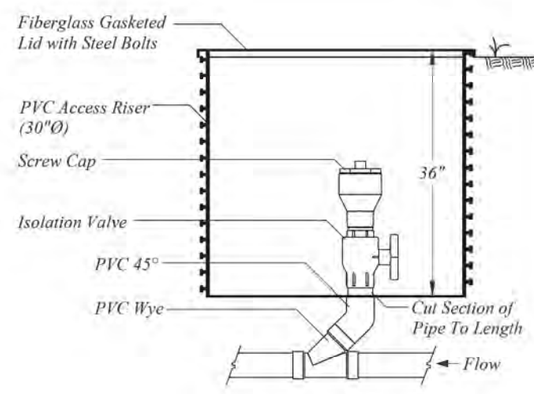

In-Line Pig Port

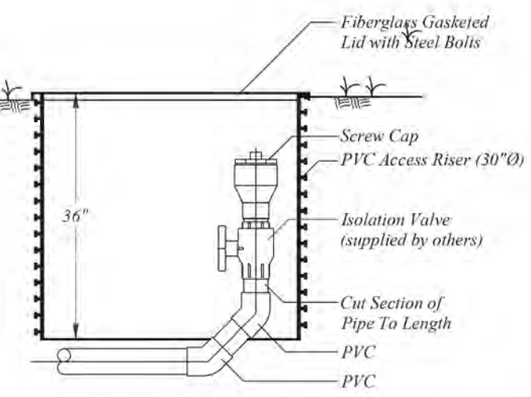

Clean-Out Detail

Digitally signed by Ron Weigel
Date: 2021.03.12 07:31:45-08'00'

RON C. WEIGEL
STATE OF WASHINGTON
28,402
REGISTERED
PROFESSIONAL ENGINEER

SHEET 27 OF -

WW COLLECTION SYSTEM & WWTF IMPROVEMENTS PROJECT
SIMPLEX EFFLUENT PUMP DETAILS
MARCH 2021

THE CHEHALIS TRIBE

CENTURY WEST ENGINEERING
5500 MEADOWS RD. #250 | LAKE OSWEGO, OR 97035
WWW.CENTURYWEST.COM | 503.419.2130

DESIGNED: R. WEIGEL
DRAWN: S. KELLEY
CHECKED: R. VOORHIES
CWE PROJECT NO. 41445001.01

SCALE
PLAN 1" = 10'
HORIZ.
PROFILE
VERT.
ONE INCH (REF.)

NO.	DATE	REVISION	BY	APRVD.

FILE: Y:\Projects\Chehalis Tribe\STEP - WWTP Project\CADD_WD\RAND\ Sims 26-34.dwg 03/08/2021 - 12:02pm

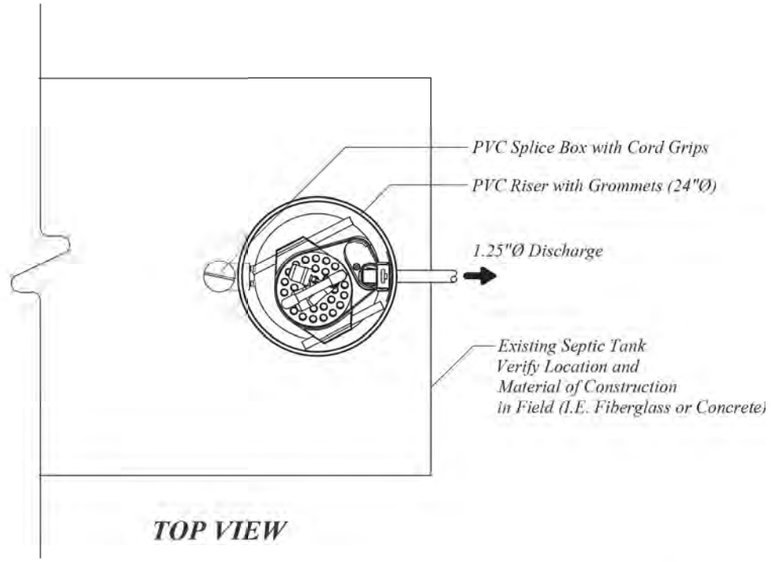

TOP VIEW

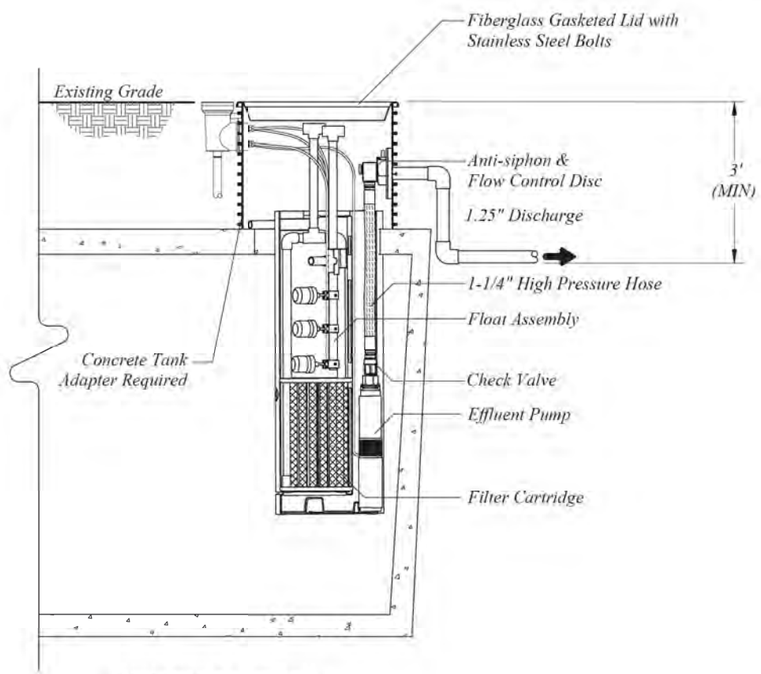

SECTION VIEW

SHEET NOTES

1. LOCATE EXISTING SEPTIC TANK OPENING WHICH MAY BE A SQUARE OR ROUND. REMOVE SOIL TO TOP OF CONCRETE TANK AND INSTALL NEW CONCRETE TANK RISER ADAPTER AS SHOWN IN DETAIL ON SHEET 27. EXPOSE EACH INDIVIDUAL TANK PRIOR TO ORDERING ADAPTER TO DETERMINE TYPE OF PARTS REQUIRED. FIBERGLASS SEPTIC TANKS WILL REQUIRE A DIFFERENT RISER ADAPTER. CONSULT SUPPLIER FOR APPROPRIATE ALTERNATIVE ADAPTER.
2. EXTEND WIRING FORM NEW OPENING TO METER AT RESIDENCE OR FACILITY.
3. REPAIR ALL SURFACE FEATURES TO THE SATISFACTION OF THE OWNER. DISTURBED DURING INSTALLATION NEW EFFLUENT PUMP SYSTEM FROM SEPTIC TANK TO FINAL CONNECTION AT RESIDENCE OR FACILITY.

Digitally signed by Ron Weigel
Date: 2021.03.12 07:31:58-08'00'

RON C. WEIGEL
STATE OF WASHINGTON
28,402
REGISTERED
PROFESSIONAL ENGINEER

SHEET 28 OF -

WW COLLECTION SYSTEM & WWTF IMPROVEMENTS PROJECT
SIMPLEX EFFLUENT PUMP DETAILS
MARCH 2021

THE CHEHALIS TRIBE

CENTURY WEST ENGINEERING
5500 MEADOWS RD. #250 | LAKE OSWEGO, OR 97035
WWW.CENTURYWEST.COM | 503.419.2130

DESIGNED: R. WEIGEL
DRAWN: S. KELLEY
CHECKED: R. VOORHIES
CWE PROJECT NO. 41445001.01

SCALE
PLAN 1" = 10'
HORIZ.
PROFILE VERT.
ONE INCH (REF.)

NO.	DATE	REVISION	BY	APRV'D.

FILE: Y:\Projects\Chehalis Tribe\STEP - WWTP Project\CADD_WD\RANCH Sims 28-34.dwg 03/08/2021 - 12:03pm

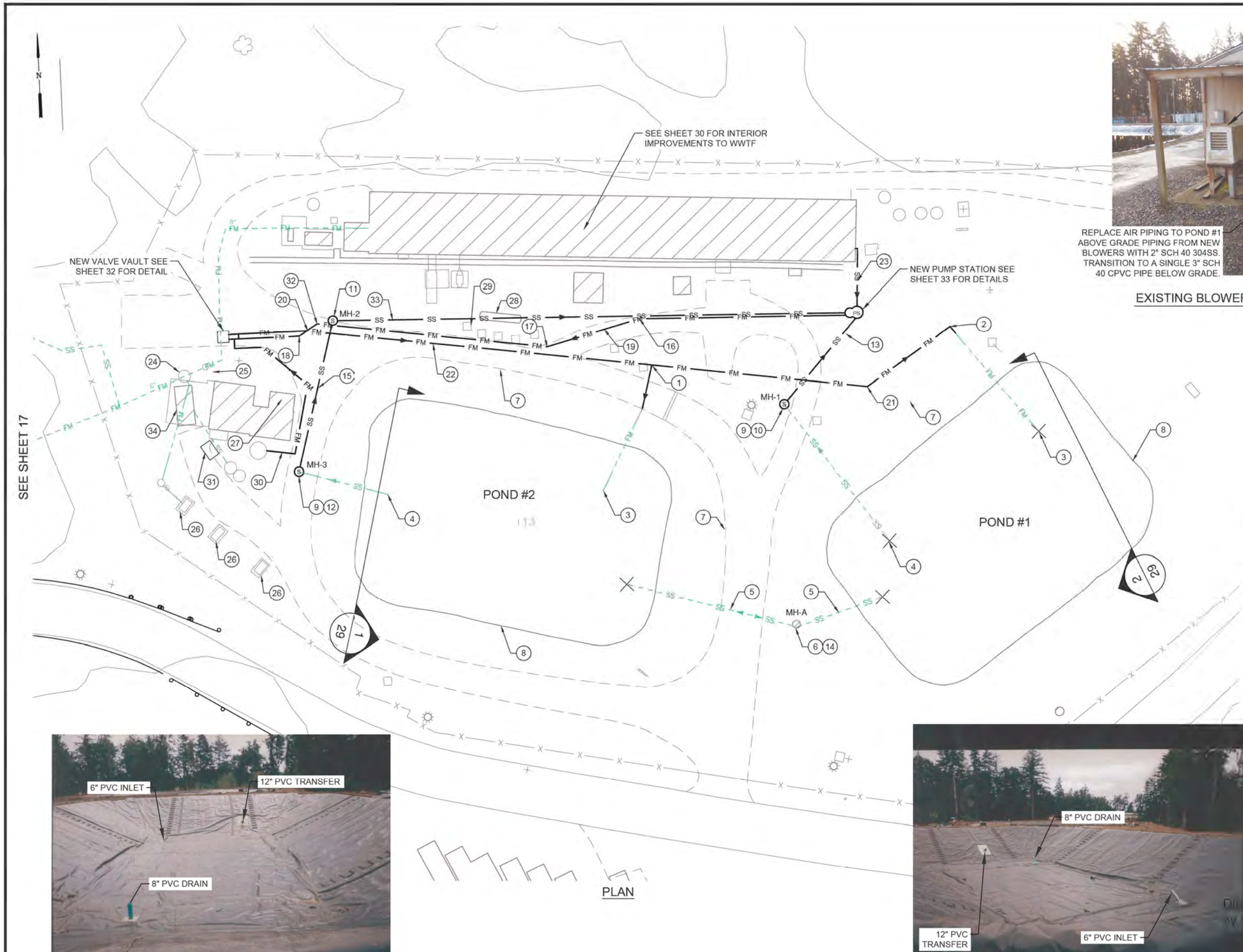

PLAN

EXISTING BLOWERS (SOUTHERLY VIEW) 3/29

POND #2 1/29

POND #1 2/29

SHEET NOTES

1. REFER TO SHEET 29A FOR CONSTRUCTION NOTES AND POND DETAILS.
2. PROVIDE FRESH 2" LAYER OF 3/4"-0 CRUSHED ROCK ON CURRENT GRAVEL SURFACES WITHIN THE WWTF COMPLEX AT THE END OF CONSTRUCTION. THIS INCLUDES THE SURFACE AROUND BOTH PONDS. DRIVEWAY TO LOWER FACILITY, PARKING LOTS, ETC.
3. MULTIPLE UNDERGROUND UTILITIES AND PIPES SERVING THE WWTF, POND #1, POND #2, AND OTHER STRUCTURES MAY BE ENCOUNTERED DURING PIPE WORK. CONTRACTOR SHOULD USE PRIVATE UTILITY LOCATING COMPANY TO MAP OUT AS MANY AS POSSIBLE. UPON EXPOSURE DURING POTHOLING OR DURING EXCAVATION OPERATIONS, CONFIRM USE WITH OWNER. ANY BREAKS TO FACILITIES THAT MUST REMAIN SHALL BE REPAIRED WITH LONG TERM SOLUTION. DOCUMENT LOCATION OF ANY REPAIR FOR FUTURE REFERENCE.

Digitally signed by Ron Weigel
Date: 2021.03.17 07:32:12-08'00'

RON C. WEIGEL
STATE OF WASHINGTON
28,402
REGISTERED
PROFESSIONAL ENGINEER

SHEET 29 OF -

WW COLLECTION SYSTEM & WWTF IMPROVEMENTS PROJECT

WWTF SITE PIPING DIAGRAM

MARCH 2021

THE CHEHALIS TRIBE

CENTURY WEST ENGINEERING
5500 MEADOWS RD. #250 | LAKE OSWEGO, OR 97035
WWW.CENTURYWEST.COM | 503.419.2130

DESIGNED: R. WEIGEL
DRAWN: S. KELLEY
CHECKED: R. VOORHIES
CWE PROJECT NO. 41445001.01

SCALE
PLAN 1" =40'
PROFILE HORIZ. VERT.
ONE INCH (REF.)

NO.	DATE	REVISION	BY	APRV'D.

FILE: Y:\Projects\Chehalis Tribe\STEP - WWTP Project\CADD_WORKING\ Site 29-34.dwg 03/10/2021 - 11:15am

CONSTRUCTION NOTES

(1) EXPOSE EXISTING 6" PVC PIPE ENTERING POND #2 AND CONNECT WITH REQUIRED FITTINGS TO TRANSITION FROM 3' DEPTH OF COVER TO UNKNOWN ELEVATION OF EXISTING PIPE. INSTALL 6" x 6" TEE (FLG x FLG) AND 2'-6" GATE VALVES (FLG x MJ). REFER TO DETAIL 1.

(2) EXPOSE EXISTING 6' PVC PIPE ENTERING POND #1 AND CONNECT WITH REQUIRED FITTINGS. TRANSITION FROM 3' DEPTH OF COVER TO UNKNOWN ELEVATION OF EXISTING PIPE. INSTALL 6" 90° ELBOW (MJ x MJ). REFER TO DETAIL 2.

(3) APPROXIMATE END OF 6" PVC DISCHARGE PIPE IN POND BOTTOM. PIPE TRAVELS THROUGH FLOOR AT APPROXIMATE 45° ANGLE TERMINATING 2' ABOVE.

(4) APPROXIMATE LOCATION OF 8" PVC INLET PIPE VERTICALLY POSITIONED THROUGH POND BOTTOM. EXTENDS APPROXIMATELY 2'-6" ABOVE POND FLOOR.

(5) EXISTING 12" PVC CONNECTING PIPE BETWEEN POND #1 AND POND #2. PIPE IS BURIED APPROXIMATELY 10 FEET BELOW EXISTING GROUND SURFACE.

(6) REMOVE EXISTING VALVE. LOCATED INSIDE 24" DIA FIBERGLASS RISER AT SURFACE INSTALL NEW 12" PLUG VALVE WITH REQUIRED FITTINGS AND ADAPTERS AFTER REMOVING SECTION OF 12" PVC PIPE. INSTALL 48" DIAMETER MANHOLE WITH OPEN DRAIN BOTTOM, DOG HOUSE STYLE OVER PIPE. PROVIDE 12" THICK CRUSHED ROCK BASE TO SET MANHOLE SECTION. ALIGN VALVE WITH 24" MANHOLE RIM FOR OPERATING EXTENSION WRENCH ON 2" NUT WITHOUT ENTERING MANHOLE.

(7) LIMITS OF POND LINER AT EDGE OF ACCESS ROADWAY AROUND POND. PROTECT FROM DAMAGE DURING CONSTRUCTION.

(8) BOTTOM OF POND/START OF SLOPE.

(9) EXPOSED EXISTING 8" PVC PIPE AND VALVE DISCHARGING FROM POND. REMOVE VALVE AND REPLACE WITH NEW 8" PLUG VALVE WITH APPROPRIATE FITTINGS FOLLOWED BY 2' SECTION OF NEW 8" PIPE THAT PROVIDES SPACE TO CONSTRUCT MANHOLE OVER END. PLUG DOWNSTREAM PIPE OUTSIDE NEW MANHOLE WITH CDF PLUG (MINIMUM 5' IN LENGTH).

(10) MH-1 (POND #1 DRAIN)
RIM EL = 119.00±
IE 102.50 IN 8" (S)
IE 102.40 OUT 8" (N)

(11) MH-2 (POND #2 DRAIN)
RIM EL = 119.00±
IE 100.00 IN 8" (S)
IE 99.90 OUT 8" (E)

(12) MH-3 (POND #2 DRAIN)
RIM EL = 119.50±
IE 100.50 IN 8" (E)
IE 100.40 OUT 8" (N)

(13) 8" PVC
L = 46'
S = 7.39%

(14) MH-A (POND #1/POND #2 INTERTIE)
RIM EL = 120.00
IE 109.00± IN 12" (E)
IE 109.00± OUT 12" (W)

(15) 8" PVC
L = 64'
S = 0.78%

CONSTRUCTION NOTES

(16) 4" - 11 1/4° ELBOW
N: 550570.77
E: 976592.16

(17) 4" - 22 1/2° ELBOW
N: 550560.89
E: 976553.63

(18) 4" - 45° ELBOW
N: 550569.75
E: 976451.67

(19) 4" PVC FORCE MAIN. L = 258'
MAINTAIN MINIMUM COVER EXTENDING FROM VALVE VAULT TO PUMP STATION.

(20) 6" - 11 1/4° ELBOW
N: 550571.72
E: 976455.19

(21) 6" 45° ELBOW
N: 550538.79
E: 976684.81

(22) 6" FORCE MAIN. L = 310'±
MAINTAIN 3' MINIMUM COVER EXCEPT AT CONNECTION POINTS INTO POND #1 AND POND #2. 2" SCHEDULE 40 PVC AIR PIPING MAY BE INSTALLED IN COMMON TRENCH TO POND #2.

(23) 4" PVC PIPE FROM INTERIOR DRAIN. REFER TO SHEET 30 FOR ADDITIONAL INFORMATION. CONNECT TO PUMP STATION AT IE 108.00

(24) REMOVE EXISTING 6" SOLENOID VALVE AND CAP EXISTING TEE WITH MJ PLUG.

(25) EXISTING 6" FLOW METER TO REMAIN IN SERVICE.

(26) REMOVE TOP OF CONCRETE SURGE TANKS AND MISCELLANEOUS SMALL PUMPS/VALVES AND DISPOSE OFF SITE. FILL EACH TANK WITH CRUSHED ROCK TO EXISTING GROUND SURFACE. OWNER TO REMOVE LIQUID FROM TANKS WITH APPROXIMATE CAPACITY OF 5500, 9500, AND 12000 GALLONS.

(27) REMOVE EXISTING BLOWERS (TWO (2) INSIDE BUILDING AND TWO (2) OUTSIDE BUILDING). REPLACE WITH TWO (2) NEW BLOWERS TO BE LOCATED ON OUTSIDE CONCRETE PAD. INSTALL NEW 2" SCHEDULE 40 304SS PIPING WITH VALVES AND FITTINGS FOR EACH BLOWER INTO A SINGLE 3" SCH 40 CPVC PIPE RUN TO NORTHEAST CORNER OF POND #1 FROM BLOWER BUILDING. PIPE MAY BE INSTALLED IN COMMON TRENCH WITH 6" FORCE MAIN WITH MINIMUM 1' SEPARATION AND 2' MINIMUM COVER. FINAL CONNECTION TO EXISTING AIR LINE AT EDGE OF POND LINER WILL REQUIRE ADDITIONAL TRENCHING IN THREE LOCATIONS TO INSTALL 3" x 2" TEES AND 2" SCH 40 CPVC PIPE TO EDGE OF POND WHERE CONNECTIONS ARE MADE ON SURFACE. PROVIDE ALL FITTINGS TO MAKE CONNECTION.

(28) TEMPORARILY MOVE EXISTING LARGE PROPANE TANK TO INSTALL NEW 8" GRAVITY DRAIN. MAINTAIN SERVICE TO SLOP TANK WASH DOWN FACILITY UNTIL TANK HAS BEEN RELOCATED BACK TO ORIGINAL SPACE. REINSTALL TANK FOLLOWING INSTALLATION OF PIPE ON NEW 6" THICK 4,000 PSI CONCRETE PAD WITH GALVANIZED BOLTS USING SAME FOOTPRINT AS ORIGINAL SLAB.

(29) REMOVE BOLLARDS AND REPLACE WITH FIVE (5) TYPE 2 PER WSDOT STANDARD PLAN H-60.20-1 EQUALLY SPACED TO PROTECT PROPANE TANK.

CONSTRUCTION NOTES

(30) INSTALL 2" CL 200 PVC PIPE FROM EXISTING PUMP CHAMBER STATION SERVICING CASINO KITCHEN WASTE AROUND BUILDING AND TAP INTO 4" PIPE OUTSIDE VAULT. SEE SHEET 32 FOR DETAIL. MAINTAIN 3' MINIMUM COVER.

(31) INSTALL PRECAST CONCRETE OIL/WATER SEPARATOR, 660-CPS WITH COVER PLATE (3'-1" x 5'-9") THAT IS SUITABLE FOR OCCASIONAL TRAFFIC BY OLDCASTLE PRECAST OR EQUAL. EXTERIOR DIMENSIONS 6'-8" x 4'-8" x 6'-0" DEEP ON LINE BETWEEN CONCRETE SLOP PAD AND SETTLING TANKS. FINAL LOCATION WITHIN THIS GENERAL AREA TO BE DETERMINED IN FIELD AFTER EXISTING CONNECTION PIPE BETWEEN THE TWO (2) FACILITIES IS LOCATED.

(32) 4" - 45° ELBOW
N: 550574.44
E: 976459.22

(33) 8" PVC
L = 211'
S = 0.43%

(34) CONCRETE SLOP PAD FOR DISPOSAL OF CASINO KITCHEN WASTE. PROPANE TANK HEATS WATER USED TO CLEAN UP WASTE CONTAINERS. SEE NOTE 28 FOR ADDITIONAL REQUIREMENTS.

GENERAL NOTES FOR PIPING MATERIALS, ETC.

A. 4" PVC PIPE SHALL BE AWWA C900.

B. 6" PVC PIPE SHALL BE AWWA C900.

C. 8" PVC SHALL BE AWWA C900 FOR PLUG VALVE INSTALLATION OUTSIDE MH-1 AND MH-4.

D. 8" PVC PIPE SHALL BE ASTM D3034.

E. ALL CAST FITTINGS SHALL HAVE PROTECTO 401 COATING APPLIED.

F. ALL FITTINGS UNLESS SHOWN OTHERWISE SHALL BE MJ AND ACCOMPANIED BY RESTRAINER GLANDS SPECIFICALLY MADE FOR PVC PIPE.

G. LOCATION OF NEW 2" AND 3" SCH 40 CPVC AIR PIPING IS NOT SHOWN ON SHEET 29. TERMINATION POINTS WILL INCLUDE OUTSIDE EXISTING BLOWER BUILDING AND THE EASTERLY SIDE OF POND #1 WHERE EXISTING AIR PIPE IS EXPOSED.

H. ALL BACKFILL FOR NEW PIPING OF ALL SIZES WITHIN WWTF LIMITS SHALL BE IMPORTED CRUSHED ROCK ABOVE THE PIPE ZONE AND COMPACTED TO 95% AS SPECIFIED

STRUCTURE	NORTHING	EASTING
MH-1	550533.031	976650.313
MH-2	550575.464	976465.776
MH-3	550513.902	976449.128
MH-A	550442.053	976651.353
CENTER OF PUMP STATION	550569.502	976681.875
SW CORNER OF VALVE VAULT	550568.406	976418.020
NW CORNER OF VALVE VAULT	550573.073	976418.012
6" TEE TO POND #2	550551.474	976596.394
6" ELBOW TO POND #1	550538.795	976684.813

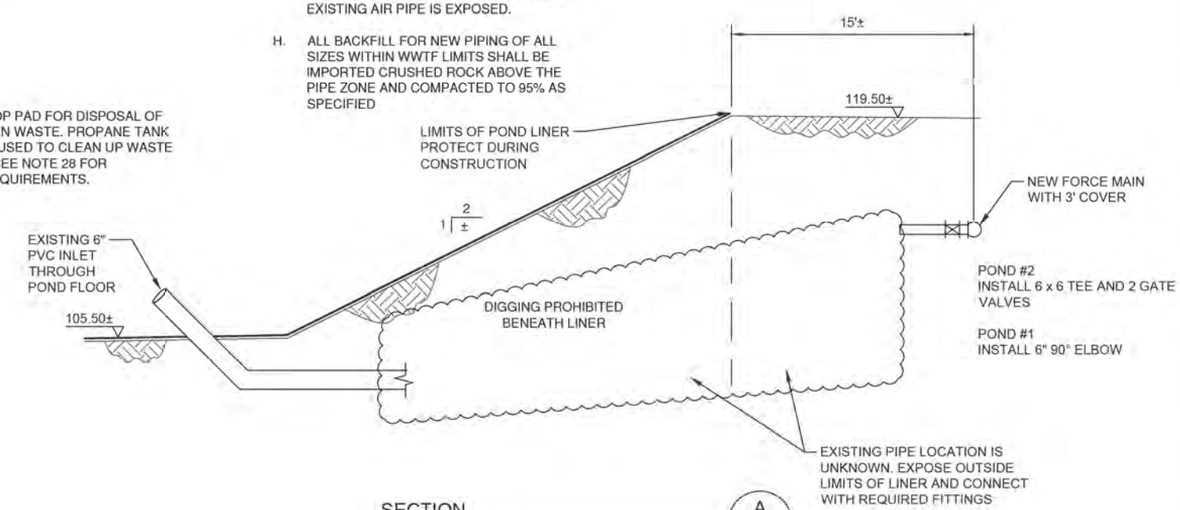

SECTION A
SCALE: N.T.S.

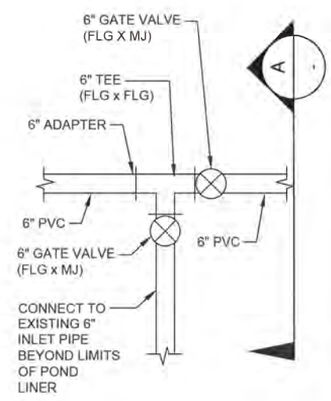

PLAN (POND #2) 1/29A
SCALE: N.T.S.

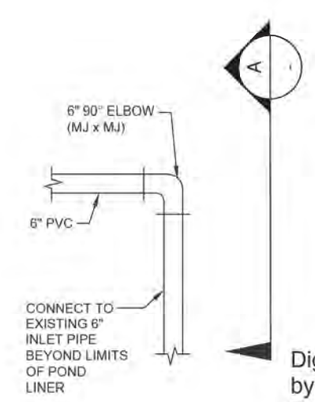

PLAN (POND #1) 2/29A
SCALE: N.T.S.

Digitally signed by Ron Weigel
Date: 2021.03.12 07:32:32-08'00'

RON C. WEIGEL
STATE OF WASHINGTON
28,402
REGISTERED
PROFESSIONAL ENGINEER

SHEET 29A OF -

WW COLLECTION SYSTEM & WWTF IMPROVEMENTS PROJECT
WWTF SITE PIPING NOTES & DETAILS
MARCH 2021

THE CHEHALIS TRIBE

CENTURY WEST ENGINEERING
5500 MEADOWS RD. #250 | LAKE OSWEGO, OR 97035
WWW.CENTURYWEST.COM | 503.419.2130

DESIGNED: R. WEIGEL
DRAWN: S. KELLEY
CHECKED: R. VOORHIES
CWE PROJECT NO. 41445001.01

SCALE
PLAN 1" =10'
PROFILE HORIZ. VERT.
ONE INCH (REF.)

NO.	DATE	REVISION	BY	APRVD.

FILE Y:\Projects\Chehalis Tribe\STEP - WWTP Project\CAD_WORKING\S Site 25-34.dwg 03/10/2021 - 11:23am

SHEET NOTE

1. REFER TO ADDITIVE ALTERNATIVE B IN THE BID SCHEDULE FOR WORK ON ANOXIC TANKS #1 AND #2.

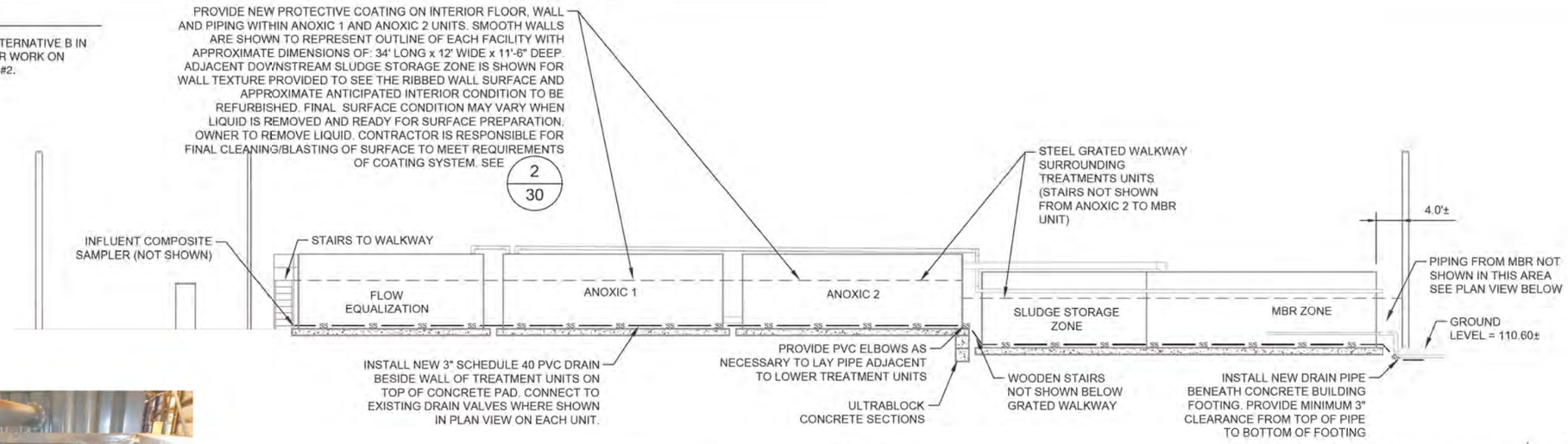

SECTION A/-
SCALE: 1" =20'

SLUDGE STORAGE ZONE (INTERIOR) 2/30
SCALE: N.T.S.

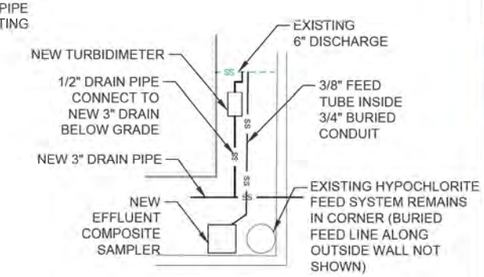

DETAIL 3/30
SCALE: N.T.S.

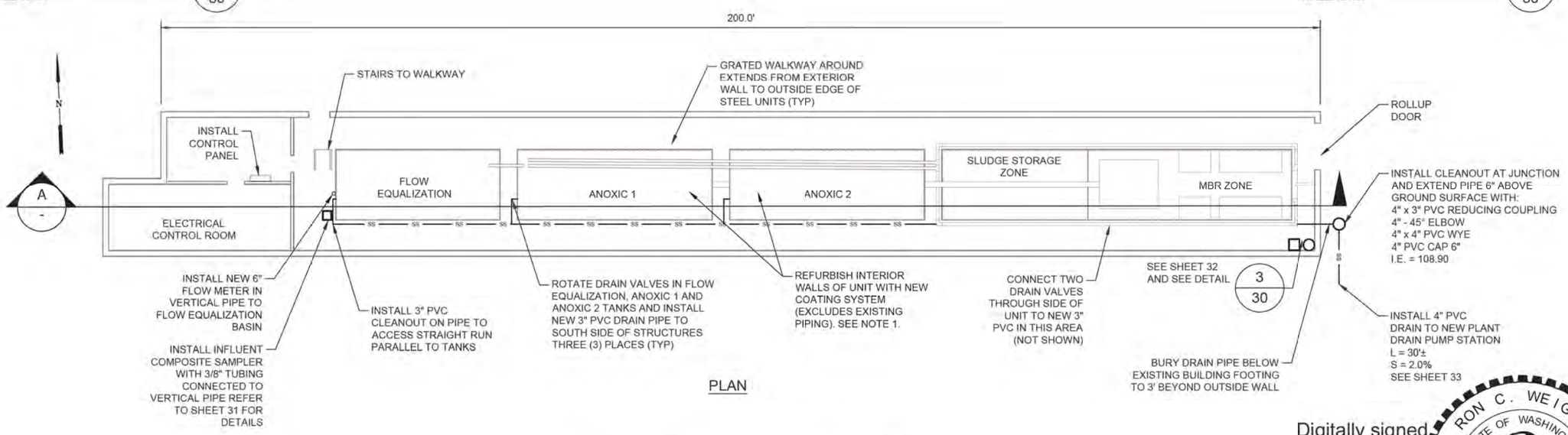

PLAN

MBR SYSTEM 1/30
SCALE: 1"=20'

Digitally signed by Ron Weigel
Date: 2021.03.12 07:32:52-08'00'

RON C. WEIGEL
STATE OF WASHINGTON
28,402
REGISTERED
PROFESSIONAL ENGINEER

SHEET 30 OF -

WW COLLECTION SYSTEM & WWTF IMPROVEMENTS PROJECT
INTERIOR PIPING
MARCH 2021

THE CHEHALIS TRIBE

CENTURY WEST ENGINEERING
5500 MEADOWS RD. #250 | LAKE OSWEGO, OR 97035
WWW.CENTURYWEST.COM | 503.419.2130

DESIGNED: R. WEIGEL
DRAWN: S. KELLEY
CHECKED: R. VOORHIES
CWE PROJECT NO. 41445001.01

SCALE: PLAN 1" =1'0"; PROFILE HORIZ. / VERT.
ONE INCH (REF)

NO.	DATE	REVISION	BY	APRV'D.

FILE: Y:\Projects\Chehalis Tribe\STEP - WWTP Project\CAD_WORKING\Sheet 25-34.dwg 03/08/2021 - 12:15pm

CUT VERTICAL PIPE AT BASE OF ELBOW AND REMOVE PIPE TO EXISTING FLANGE. ALL NEW VERTICAL PIPE SHALL MATCH EXISTING PIPE IN TYPE, SCHEDULE, AND THICKNESS.

SHIFT VALVE WITHIN VERTICAL PIPE SECTION AS DESCRIBED IN 2/31

SCALE: N.T.S. 1/31

WEST WALL FLOW EQUALIZATION

FROM EXISTING FLANGE ON STEEL PIPE, INSTALL THE FOLLOWING:
1. NEW 6" FLOW METER
2. 6" SCH 40 STEEL PIPE L = 24" (MIN)
3. MISC SCH 40 PVC PIPE AND FITTINGS.
4. RELOCATE EXISTING VALVE.
5. CONNECT TO EXISTING 90° ELBOW WITH REQUIRED FITTINGS/ADAPTERS.

INSTALL NEW 3/8" ID PTFE LINE POLYETHLENE (COMPOSITE SAMPLER PIPE) WITH SADDLE AND CORP IN UPPER 6" OF THE 24" SPOOL AND BELOW THE RELOCATED VALVE.

SCALE: N.T.S. 2/31

3/8" FEED PIPE TO COMPOSITE SAMPLER (NOT SHOWN) IN VERTICAL FEED LINE

INLET COMPOSITE SAMPLER TO BE LOCATED ON FLOOR ADJACENT TO WEST WALL.

SCALE: N.T.S. 3/31

INSTALL COMPOSITE SAMPLER. BURY 3/4" PVC CONDUIT 6' BELOW SURFACEFROM HORIZONTAL ELBOW WITH SUITABLE FITTINGS AND ELBOWS TO INSERT 3/8" I.D. PTFE LINE POLYETHLENE

REPLACE EXISTING FLOW METER ON EAST WALL OF MBR ZONE TANK. TWO (2) REQUIRED

EAST WALL BUILDING

EAST WALL MBR

SHIFT HYPOCHLORITE FEED SYSTEM TO CORNER AND CONTINUE USE

SCALE: N.T.S. 4/31

SOUTH WALL BUILDING

ULTRABLOCK SECTIONS (VIEW WESTERLY)

SCALE: N.T.S. 5/31

MBR DRAINS ROTATE ELBOWS (TYP.)

SCALE: N.T.S. 6/31

SOUTH WALL BUILDING

SOUTH WALL TREATMENT UNITS

INSTALL NEW 3" DRAIN PIPE PARALLEL TO WALL ON TOP SURFACE OF CONCRETE FOOTING

SCALE: N.T.S. 7/31

INSTALL NEW EFFLUENT COMPOSITE SAMPLER ON SOUTH WALL OF BUILDING

3" PVC DRAIN ON SURFACE PARALLEL TO TREATMENT UNIT

TYPICAL 2" DRAIN VALVE AND ELBOW. ROTATE ELBOW TO DISCHARGE TOWARDS SOUTH WALL OF BUILDING.

SOUTH WALL MBR ZONE TANK

SCALE: N.T.S. 8/31

TAP HORIZONTAL PIPE FOR TURBIDIMETER (1/2") AND COMPOSITE SAMPLER (3/8"). PROVIDE CORP STOPS WITH EACH CONNECTION

SCALE: N.T.S. 9/31

INSTALL NEW 2" FLOW METER ON DOWNSTREAM SIDE OF EXISTING UNITS, TWO (2) REQUIRED. PROVIDE NEW PIPE OF SAME MATERIAL ALONG WITH NECESSARY FITTINGS.

INSTALL TURBIDIMETER AND TRANSMITTER 1'-6" ABOVE FINISHED FLOOR ON UNISTRUT SUPPORT BRACKETS (DIMENSION REFERS TO BOTTOM OF UNITS) NEXT TO 6" EFFLUENT DRAIN PIPE. PLACE VERTICAL BRACKETS IN 1'-6" SQUARE 6" THICK CONCRETE PAD. CONNECT 1/2" DRAIN TUBING FROM TURBIDIMETER TO NEW 3" DRAIN LINE BURIED UNDER EAST WALL OF BUILDING. TAP EXISTING 6" INFLUENT LINE WITH 1/2" PIPE FOR TURBIDIMETER INFLUENT.

SCALE: N.T.S. 10/31

Digitally signed by Ron Weigel
Date: 2021.03.12 07:33:14-08'00'

RON C. WEIGEL
STATE OF WASHINGTON
28,402
REGISTERED
PROFESSIONAL ENGINEER

SHEET 31 OF -

WW COLLECTION SYSTEM & WWTF IMPROVEMENTS PROJECT
INTERIOR EQUIPMENT DETAILS
MARCH 2021

THE CHEHALIS TRIBE

CENTURY WEST ENGINEERING
5500 MEADOWS RD. #250 | LAKE OSWEGO, OR 97035
WWW.CENTURYWEST.COM | 503.419.2130

DESIGNED: R. WEIGEL
DRAWN: S. KELLEY
CHECKED: R. VOORHIES
CWE PROJECT NO. 41445001.01

SCALE
PLAN 1" = 10'
PROFILE HORIZ. VERT.
ONE INCH (REF)

NO.	DATE	REVISION	BY	APRVD

FILE: Y:\Projects\Chehalis Tribe\STEP - WWTP Project\CAD_WORKING\Sht 25-34.dwg 03/12/2021 - 7:27am

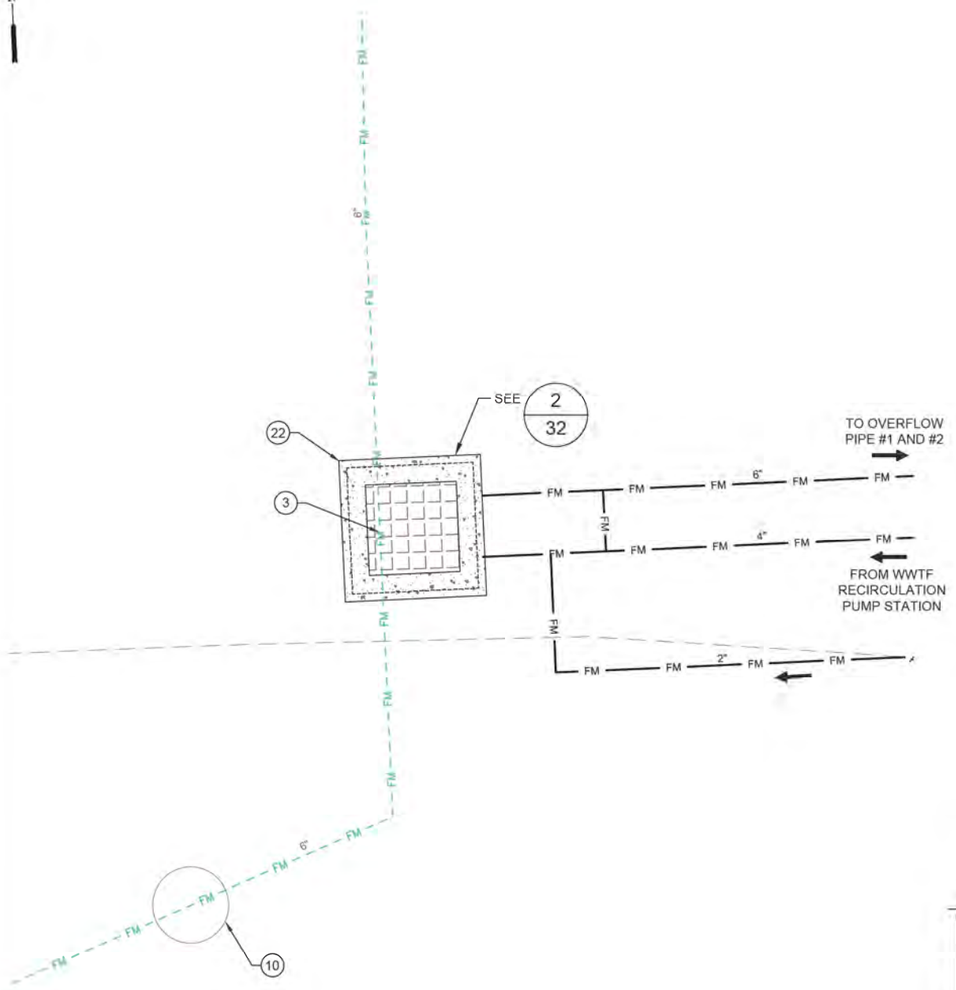

VAULT
SCALE: 1"=5'
1/32

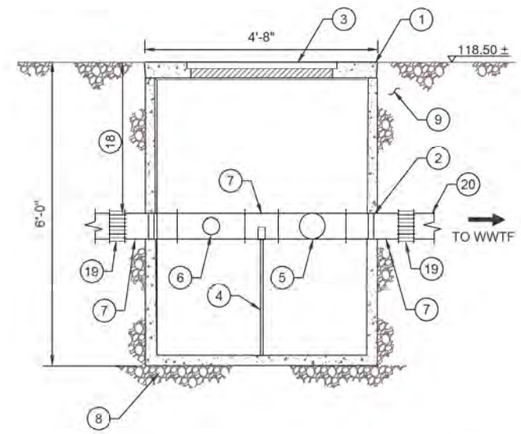

VAULT SECTION
SCALE: 1"=3'
A

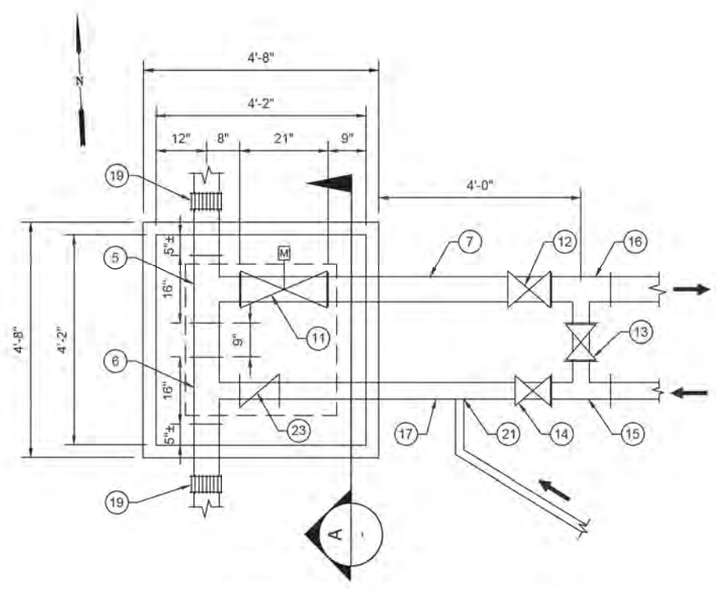

VAULT PIPING DETAIL
SCALE: 1"=3'
2/32

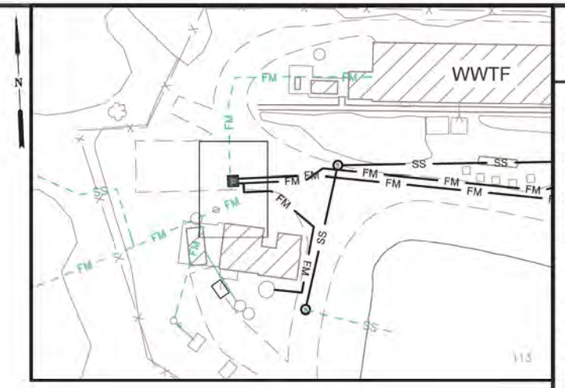

KEY MAP
SCALE: N.T.S.

CONSTRUCTION NOTES

1. PRECAST CONCRETE CHAMBER, 506-LA BY OLDCASTLE PRECAST OR EQUAL. EXTERIOR DIMENSIONS 4'-8" x 4'-8" x 6'-0" DEEP.
2. LINK SEAL ASSEMBLY FOR PVC PIPE (EACH SIDE TYP.). CORE DRILL FOLLOWING CONFIRMATION OF EXISTING PIPE DEPTH.
3. TRAFFIC RATED LID (3'-0" x 3'-0").
4. ADJUSTABLE GALV. STEEL SADDLE TYPE PIPE STAND.
5. 6" x 6" TEE (MJ x FLG) WITH RETAINER GLANDS FOR C900 PVC PIPE.
6. 6" x 4" TEE (MJ x FLG) WITH RETAINER GLANDS FOR C900 PVC PIPE.
7. 6" C900 PVC PIPE.
8. PROVIDE 6" THICK AGGREGATE BASE FOUNDATION BASE USING 1"-0 CRUSHED ROCK.
9. BACKFILL WITH 1"-0 CRUSHED ROCK.
10. EXISTING FLOW METER REMAINS IN PLACE.
11. 6" MOTORIZED PLUG VALVE (FLG x FLG) WITH FLG x MJ ADAPTER.
12. 6" GATE VALVE (FLG x MJ) - NORMALLY OPEN.
13. 4" GATE VALVE (FLG x FLG) - NORMALLY CLOSED.
14. 4" GATE VALVE (FLG x MJ) - NORMALLY OPEN.
15. 4" x 4" TEE (FLG x FLG) WITH FLG x MJ ADAPTER AND RETAINER GLAND ON ONE SIDE.
16. 6" x 4" TEE (FLG x FLG) WITH FLG x MJ ADAPTER AND RETAINER GLAND ON ONE SIDE.
17. 4" C900 PVC PIPE.
18. APPROXIMATE DEPTH OF COVER 3'-0"±.
19. REMOVE SUFFICIENT PIPE TO INSTALL NEW VAULT. CONNECT WITH 6" COMPRESSION COUPLING OUTSIDE VAULT ON EACH SIDE.
20. VERIFY O.D. OF 6" PVC PIPE FOR PROPER COMPRESSION COUPLING.
21. 2" PVC PIPE FROM PUMP STATION. CONNECT TO 4" PVC PIPE WITH SADDLE AND GATE VALVE 2' OUTSIDE VAULT WALL.
22. APPROXIMATE NE CORNER VERIFY IN FIELD.
    N: 550573.07
    E: 976418.01
23. 4" CHECK VALVE (FLG x FLG) WITH FLG x MJ ADAPTER AND RETAINER GLAND.

Digitally signed by Ron Weigel
Date: 2021.03.12 07:33:32-08'00'

RON C. WEIGEL
STATE OF WASHINGTON
28,402
REGISTERED
PROFESSIONAL ENGINEER

SHEET 32 OF -

WW COLLECTION SYSTEM & WWTF IMPROVEMENTS PROJECT
VALVE VAULT DETAILS
MARCH 2021

THE CHEHALIS TRIBE

CENTURY WEST ENGINEERING
5500 MEADOWS RD. #250 | LAKE OSWEGO, OR 97035
WWW.CENTURYWEST.COM | 503.419.2130

DESIGNED: R. WEIGEL
DRAWN: S. KELLEY
CHECKED: R. VOORHIES
CVE PROJECT NO. 41445001.01

SCALE
PLAN: AS SHOWN
PROFILE: HORIZ. / VERT.
ONE INCH (REF)

NO.	DATE	REVISION	BY	APRVD.

FILE: Y:\Projects\Chehalis Tribe\STEP - WWTP Project\CAD_WORKING\Site 25-34.dwg 03/08/2021 - 12:13pm

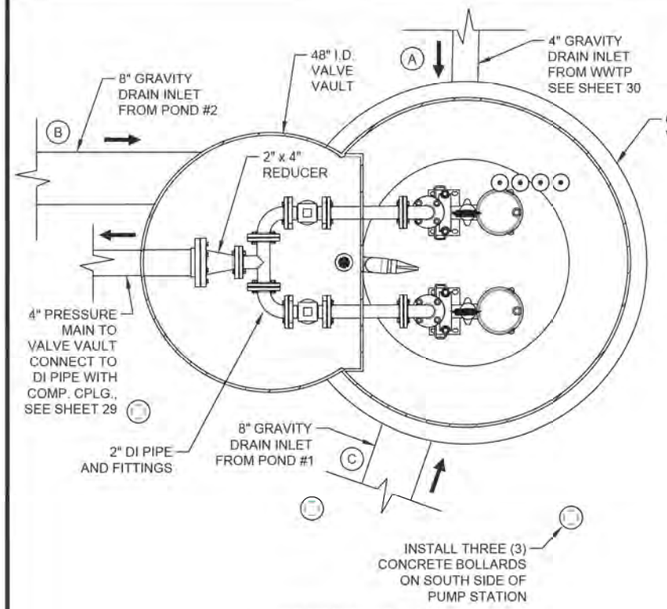

SECTION AT-AT

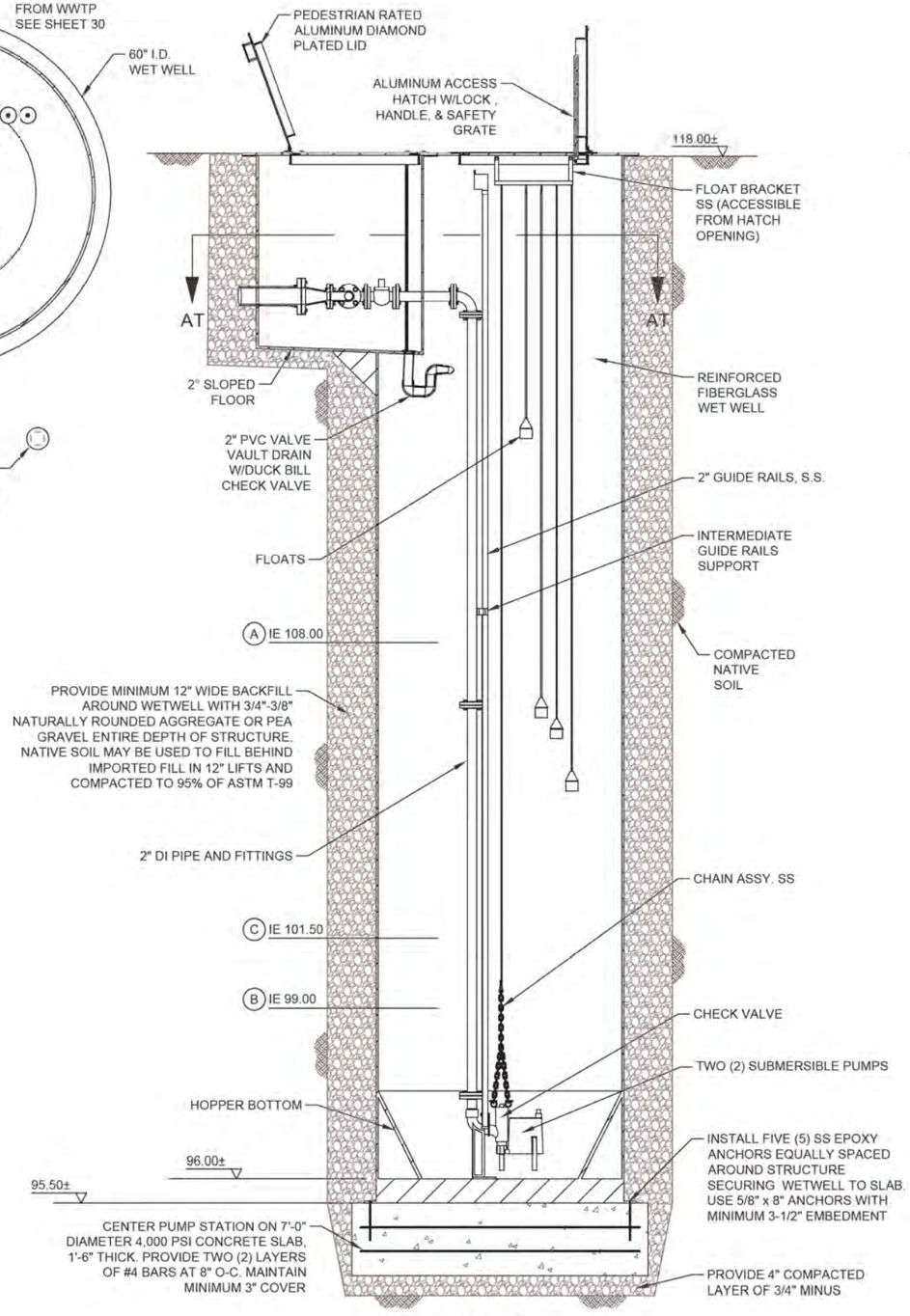

SECTION AR-AR

PUMP STATION DETAIL 1/-

SCALE: N.T.S.

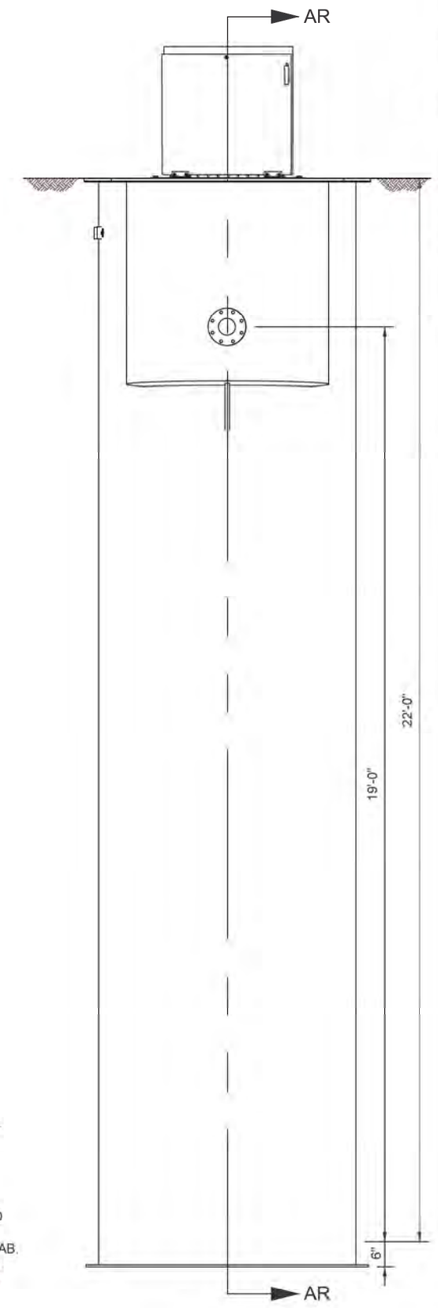

BACK VIEW

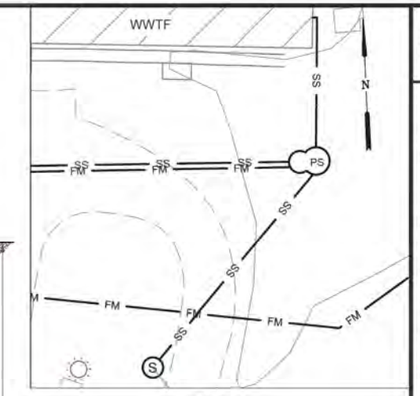

PLAN

SHEET NOTES

1. ALL STAINLESS STEEL (S.S.) PIPE, FITTINGS, AND FASTENERS SHALL BE TYPE 316.
2. ALL DUCTILE IRON PIPE AND FITTINGS EPOXY COAT ON OUTSIDE AND PROTECTO 401 ON THE INSIDE.

Digitally signed by Ron Weigel
Date: 2021.03.12 07:33:49-08'00'

RON C. WEIGEL
STATE OF WASHINGTON
28,402
REGISTERED
PROFESSIONAL ENGINEER

SHEET 33 OF -

WW COLLECTION SYSTEM & WWTF IMPROVEMENTS PROJECT
PLANT DRAIN PUMP STATION DETAILS
MARCH 2021

THE CHEHALIS TRIBE

CENTURY WEST ENGINEERING
5500 MEADOWS RD. #250 | LAKE OSWEGO, OR 97035
WWW.CENTURYWEST.COM | 503.419.2130

DESIGNED: R. WEIGEL
DRAWN: S. KELLEY
CHECKED: R. VOORHIES
CWE PROJECT NO. 41445001.01

SCALE
PLAN: N.T.S.
PROFILE: HORIZ. / VERT.
ONE INCH (REF)

NO.	DATE	REVISION	BY	APRV'D

FILE: Y:\Projects\Chehalis Tribe\STEP - WWTP Project\CAD_WORKING\Sheet 25-34.dwg 03/08/2021 - 12:20pm

INSTRUMENT LETTER COMBINATIONS

FIRST LETTERS	INITIATING OR MEASURED VARIABLE	MODIFIER	READOUT OR FUNCTION	MODIFIER	CONTROLLERS RECORDING	CONTROLLERS INDICATING	CONTROLLERS BLIND	SELF-ACTUATED CONTROL VALVES
A	ANALYSIS (1)		ALARM	AUTO	ARC	AIC	AC	
B	BURNER/COMBUSTION				BRC	BIC	BC	
C	CONDUCTIVITY		CONTROL/COMMAND	CLOSED				
D	DENSITY	DIFFERENTIAL						
E	VOLTAGE/EMERGENCY		ELEMENT/SENSOR		ERC	EIC	EC	
F	FLOW RATE	RATIO/FRACTION		FORWARD	FRC	FIC	FC	FCV, FICV
FQ	FLOW QUANTITY				FQRC	FQIC		
FF	FLOW RATIO				FFRC	FFIC	FFC	
G	GENERAL		GAUGE					
H	HAND			HIGH/HAND		HIC	HC	
I	CURRENT		INDICATOR		IRC	IIC		
J	POWER	SCAN			JRC	JIC		
K	TIME	RATE CHANGE			KRC	KIC	KC	KCV
L	LEVEL		LIGHT	LOW/LOCAL	LRC	LIC	LC	LCV
M	MOISTURE	MOMENTARY		MIDDLE				
N	GAS							
O	USER'S CHOICE		ORIFICE	OFF/OPEN				
P	PRESSURE/VACUUM		TEST POINT		PRC	PIC	PC	PCV
PD	PRESSURE, DIFFERENTIAL				PDRC	PDIC	PDC	PDCV
Q	QUANTITY, EVENT	TOTALIZE	TOTALIZER		QRC	QIC		
R	RUN		RECORDER	REMOTE/REVERSE	RRC	RIC	RC	
S	SPEED/FREQUENCY	SAFETY	SWITCH/STOP		SRC	SIC	SC	SCV
T	TEMPERATURE		TRANSMITTER		TRC	TIC	TC	TCV
TD	TEMPERATURE, DIFFERENTIAL				TDRC	TDIC	TDC	TDCV
U	MULTIVARIABLE		MULTIFUNCTION					
V	VIBRATION/VISCOSITY		VALVE/LOUVER					
W	TORQUE/WEIGHT		WELL		WRC	WIC	WC	WCV
WD	WEIGHT/FORCE, DIFFERENTIAL				WDRC	WDIC	WDC	WDCV
X	UNCLASSIFIED		UNCLASSIFIED					
Y	EVENT/STATUS		RELAY			YIC	YC	
Z	POSITION/DIMENSION		ACTUATOR		ZRC	ZIC	ZC	ZCV
ZD	GAUGING/DEVIATION				ZDRC	ZDIC	ZDC	ZDCV

FIRST LETTERS	READOUT DEVICES RECORDING	READOUT DEVICES INDICATING	SWITCHES AND ALARMS HIGH	SWITCHES AND ALARMS LOW	SWITCHES AND ALARMS COMB	TRANSMITTERS RECORD-ING	TRANSMITTERS INDICATING	TRANSMITTERS BLIND	SOLENOID, RELAYS COMPUTING DEVICES	PRIMARY ELEMENT	TEST POINT OR WELL	VIEWING GAUGE
A	AR	AI	ASH	ASL	ASHL	ART	AIT	AT	AY	AE	AP, AW	
B	BR	BI	BSH	BSL	BSHL	BRT	BIT	BT	BY	BE	BW	BG
C												
D												
E	ER	EI	ESH	ESL	ES, ESHL	ERT	EIT	ET	EY	EE		
F	FR	FI	FSH	FSL	FSHL	FRT	FIT	FT	FY	FE	FP	FG
FQ	FQR	FQI	FQSH	FQSL			FQIT	FQT	FQY	FQE		
FF	FFR	FFI	FFSH	FFSL						FE		
G												
H					HS,HMS,HOA							
I	IR	II	ISH	ISL	ISHL	IRT	IIT	IT	IY	IE		
J	JR	JI	JSH	JSL	JSHL	JRT	JIT	JT	JY	JE		
K	KR	KI, KQI	KSH	KSL	KSHL	KRT	KIT	KT	KY	KE		
L	LR	LI	LSH	LSL	LSHL	LRT	LIT	LT	LY	LE	LW	LG
M												
N												
O												
P	PR	PI	PSH	PSL	PSHL	PRT	PIT	PT	PY	PE	PP	PG
PD	PDR	PDI	PDSH	PDSL		PDRT	PDIT	PDT	PDY	PE		
Q	QR	QI, QQI	QSH	QSL	QSHL	QRT	QIT	QT	QY	QE		
R	RR	RI, RQI	RSH	RSL	RSHL	RRT	RIT	RT	RY	RE		
S	SR	SI	SSH	SSL	SSHL	SRT	SIT	ST	SY	SE		
T	TR	TI	TSH	TSL	TSHL	TRT	TIT	TT	TY	TE	TP, TW	TG
TD	TDR	TDI	TDSH	TDSL		TDRT	TDIT	TDT	TDY	TE		
U	UR	UI							UY			
V	VR	VI	VSH	VSL	VSHL	VRT	VIT	VT	VY	VE		
W	WR	WI	WSH	WSL	WSHL	WRT	WIT	WT	WY	WE		
WD	WDR	WDI	WDSH	WDSL		WDRT	WDIT	WDT	WDY	WE		
X												
Y	YR	YI	YSH	YSL				YT	YY	YE		
Z	ZR	ZI, ZIC, ZIO	ZSH	ZSL	ZSHL	ZRT	ZIT	ZT	ZY	ZE		
ZD	ZDR	ZDI	ZDSH	ZDSL		ZDRT	ZDIT	ZDT	ZDY	ZDE		

NOTES:
(1) ANALYSIS MAY BE USED FOR DISSOLVED OXYGEN (DO), pH, TURBIDITY (TURB), CHLORINE RESIDUAL (CL2), ETC.

PROCESS PIPING CODES

CODE	PIPING/PROCESS SYSTEM	CODE	VALVE TYPE	CODE	VALVE POSITION MODIFIER
AIR	AIR, LOW PRESSURE	ARV	AIR RELEASE VALVE	NC	NORMALLY CLOSED
CLS	CHLORINE SOLUTION	ARVV	AIR RELEASE AND VACUUM VALVE	NO	NORMALLY OPEN
CIP	CLEAN IN PLACE	BFV	BUTTERFLY VALVE	MOD	MODULATING
ML	MIXED LIQUOR	BPV	BACKPRESSURE VALVE		
MLR	MIXED LIQUOR RECYCLE	BV	BALL VALVE		
PD	PLANT DRAIN	CV	CHECK VALVE		
RS	RAW SEWAGE	GV	GATE VALVE		
SE	SECONDARY EFFLUENT	PFV	PRESSURE RELIEF VALVE		
SS	SANITARY SEWER	PV	PLUG VALVE		
WP	WATER, POTABLE	PRV	PRESSURE REGULATING VALVE		
WAS	WASTE ACTIVATED SLUDGE	RPBP	REDUCED PRESSURE BACKFLOW PREVENTER		
		SV	SOLENOID VALVE		

4.1 PID IDENTIFICATION LETTERS
CHLSPID-IL (1) NO SCALE

PROCESS AND INSTRUMENTATION DIAGRAM LEGEND

- XX NNN DDD — Local/Field Mounted Instrument
- XX NNN DDD — Pilot Light
- XX NNN DDD — Local Panel/Motor Control Center Mounted Instrument
- XX NNN DDD — Local Panel Display
- XX NNN DDD — Main Control Panel Instrument
- XX NNN DDD — HMI/SCADA Display
- XX NNN DDD — PLC Control Function

XX = Letter Designator – Type and Function
NNN = Instrument/Circuit Number
DDD = Description/Function Modifier

INSTRUMENT LINE SYMBOLS

- Discrete I/O Signal – New
- Discrete I/O Signal – Existing
- Analog I/O Signal – New
- Analog I/O Signal – Existing
- Communication Signal – New
- Communication Signal – Existing
- Pneumatic Signal – Instrument Air
- Hydraulic Signal

PIPE LINE SYMBOLS

- Main Process Pipe/Internal Recycle Pipe
- Future Main Process Pipe
- RAS/WAS Pipe
- Future RAS/WAS Pipe
- Drain/Chemical/Water Pipe
- Future Drain/Chemical/Water Pipe
- Low Pressure Air Pipe
- Future/Existing Low Pressure Air Pipe

INSTRUMENT SYMBOLS

- FE — Magnetic or Mass Flow Meter
- Ultrasonic Level Element
- PS PG — Pressure Gauge or Switch with Diaphragm Seal and Isolation Valve

ACTUATOR SYMBOLS

- S — Solenoid Actuator
- E — Electric Actuator
- P — Pneumatic Actuator
- M — Motorized Actuator

4.3 INSTRUMENTATION SYMBOLS
CHLSPID-KI (1) NO SCALE

VALVE SYMBOLS

- Gate Valve (GV)
- Needle Valve (NV)
- Check Valve (CV)
- Buried Gate Valve w/Valve Box
- Plug Valve (PV)
- Ball Valve (BV)
- Hose Bibb (HB)
- Cleanout (CO)
- Butterfly Valve (BFV)
- Diaphragm Valve (DV)
- Pinch Valve (PNV)
- Pressure Regulating Valve (PRV)
- Back Pressure Valve (BPV)
- Pressure Relief Valve (PFV)
- Mud Valve (MV)
- Float Valve (FV)
- Air Release Valve (ARV)
- Air Release and Vacuum Valve (ARVV)
- Telescoping Valve (TV)

GATE, WEIR, FLUME SYMBOLS

- Slide or Sluice Gate (G)
- V-Notched Weir (W)
- Rectangular Weir (W)
- Parshall Flume

PIPING SYMBOLS

- 45 Degree Bend
- 90 Degree Bend
- Sanitary Wye
- Tee
- Cross
- Reducer
- Flare
- Cap/Blind Flange/Plug
- Flange Joint
- Threaded Joint
- Hose Adapter
- Flexible Coupling
- Expansion Joint/Flexible Connector
- Camlock
- In-line Static Mixer
- Rotameter
- Calibration Chamber
- Pulsation Dampener
- In-line Strainer
- Air Filter

4.4 VALVE AND PIPING SYMBOLS
CHLSPID-KV (1) NO SCALE

EQUIPMENT SYMBOLS

- Centrifugal Pump
- Submersible Pump
- Vertical Turbine Pump
- Diaphragm Pump
- Chemical Metering Pump
- Fan or Blower
- In-Line Grinder
- Bar Rack
- Mechanical Bar Rack
- In-Channel Rotary Screen
- Screw Auger
- Vertical Mixer
- Submersible Mixer
- Floating Turbine Aerator or Mixer
- Floating Aspirating Aerator
- Air Diffuser
- Clarifier
- Horizontal Belt Filter Press
- Vertical Belt Filter Press
- Sludge Truck

4.5 EQUIPMENT SY
CHLSPID-KE (1)

ALLISON MARY ZIOMEK ESVELT
STATE OF WASHINGTON
34876
3/8/2021
REGISTERED PROFESSIONAL ENGINEER

SHEET 34 OF -

WW COLLECTION SYSTEM / WWTF IMPROVEMENTS PROJECT
PROCESS INSTRUMENTATION LEGEND AND CODES
MARCH 2021

THE CHEHALIS TRIBE

CENTURY WEST ENGINEERING
5500 MEADOWS RD. #250 | LAKE OSWEGO, OR 97035
WWW.CENTURYWEST.COM | 503.419.2130

DESIGNED: A. ESVELT
DRAWN: A. ESVELT
CHECKED: M. ESVELT
CWE PROJECT NO. 41445001.01

SCALE
PLAN: AS SHOWN
PROFILE: HORIZ. / VERT.
ONE INCH (REF)

NO.	DATE	REVISION	BY	APRVD.

FILE: C:\CHLS\ CHLSPID.dwg 03/08/2021 - 10:50am

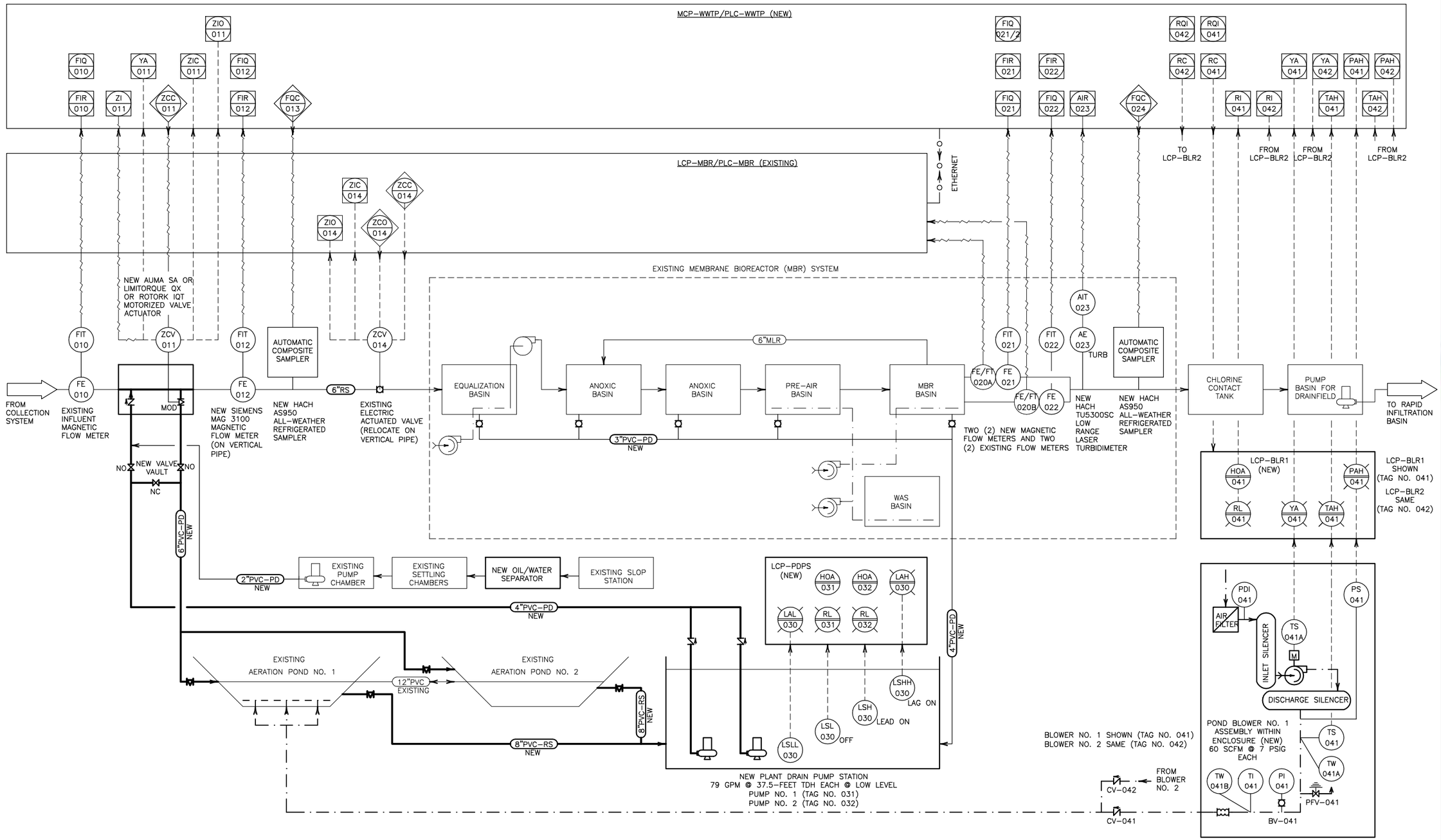

SHEET 35 OF -

WW COLLECTION SYSTEM / WWTF IMPROVEMENTS PROJECT

PROCESS AND INSTRUMENTATION DIAGRAM

MARCH 2021

THE CHEHALIS TRIBE

CENTURY WEST ENGINEERING
5500 MEADOWS RD. #250 | LAKE OSWEGO, OR 97035
WWW.CENTURYWEST.COM | 503.419.2130

DESIGNED: A. ESVELT
DRAWN: A. ESVELT
CHECKED: M. ESVELT
CWE PROJECT NO. 41445001.01

SCALE
PLAN: AS SHOWN
PROFILE: HORIZ. / VERT.
ONE INCH (REF)

NO.	DATE	REVISION	BY	APRVD

FILE: C:\CHLS\ CHLSPID.dwg 03/08/2021 - 10:51am

ABBREVIATIONS

AFC	AVAILABLE FAULT CURRENT
AFG	ABOVE FINISHED GRADE
AF	AMP FRAME
AFCI	ARC FLASH CIRCUIT INTERRUPTER
AFF	ABOVE FINISHED FLOOR
AI	ANALOG INPUT POINT
AIC	AMPERE INTERRUPTING CAPACITY
AHJ	AUTHORITY HAVING JURISDICTION
AO	ANALOG OUTPUT POINT
ATS	AUTOMATIC TRANSFER SWITCH
BC	BATTERY CHARGER
BH	BLOCK HEATER
C	CONDUIT
CB	CIRCUIT BREAKER
COMM	COMMUNICATIONS
CPT	CONTROL POWER TRANSFORMER
CT	CURRENT TRANSFORMER
DI	AC DIGITAL INPUT POINT
DO	AC DIGITAL OUTPUT POINT
EC	ELECTRICAL CONTRACTOR
EF	EXHAUST FAN
EMT	ELECTRICAL METALLIC TUBING
FAAP	FIRE ALARM ANNUNCIATOR PANEL
FACP	FIRE ALARM CONTROL PANEL
GFCI	GROUND FAULT CIRCUIT INTERRUPTER
GFP	GROUND FAULT PROTECTION
GND	GROUND
GRS	GALVANIZED RIGID STEEL CONDUIT
HH	HANDHOLE
HOA	HAND-OFF-AUTO
IC	ISOLATION CONTACT
IMC	INTERMEDIATE METALLIC CONDUIT
JBOX	JUNCTION BOX
LCP	LIGHTING CONTROL PANEL
LTG	LIGHTING
MCC	MOTOR CONTROL CENTER
MDP	MAIN DISTRIBUTION PANEL
MLO	MAIN LUGS ONLY
NL	NIGHT LIGHT
NTS	NOT TO SCALE
OC	ON CENTER
OH	OVERHEAD
OIT	OPERATOR INTERFACE TERMINAL
OS	OCCUPANCY SENSOR
PB	PUSH BUTTON
PIV	POST INDICATOR VALVE
PNL	PANEL
PS	POWER SUPPLY
PT	POTENTIAL TRANSFORMER
PTT	PUSH TO TEST
PVC	POLYVINYL CHLORIDE
RCPT	RECEPTACLE
RMC	RIGID METAL CONDUIT
RTM	RUN TIME METER
SA	SURGE ARRESTOR
SPD	SURGE PROTECTIVE DEVICE
SS	STAINLESS STEEL
STP	SHIELDED TWISTED PAIR
SV	SOLENOID VALVE
TYP	TYPICAL
UH	UNIT HEATER
UL	UNDERWRITERS LABORATORIES
UG	UNDERGROUND
UON	UNLESS OTHERWISE NOTED
UTP	UNSHIELDED TWISTED PAIR
VFD	VARIABLE FREQUENCY DRIVE
WP	WEATHERPROOF
XFMR	TRANSFORMER

REFERENCE SYMBOLS

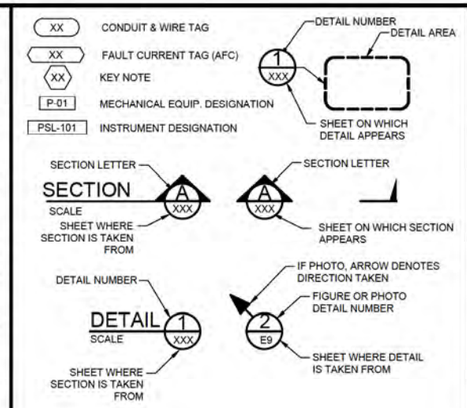

RECEPTACLES

	SPECIAL PURPOSE RECEPTACLE, RATING AS INDICATED / = TWISTLOCK
	STANDARD RECEPTACLES: 125V, 20A 18" AFF, UON. TYPES: SIMPLEX /DUPLEX /QUADRUPLEX /FLOOR DUPLEX /FLOOR QUADRUPLEX
	GFCI RECEPTACLES: 125V, 20A 18" AFF, UON. TYPES: SIMPLEX /DUPLEX /QUADRUPLEX
X	C = CEILING MOUNTED S = HALF SWITCHED I = ISOLATED GROUND TR = TAMPER RESISTANT a = LOWER CASE LETTER INDICATES SWITCH CONTROL 2" = MEASUREMENT INDICATES HEIGHT ABOVE BACKSPLASH/MILLWORK A = INDICATES MOUNT ABOVE BACKSPLASH/ MILLWORK. COORDINATE HEIGHT WITH TRADES. USB = INDICATES 20A 120V DUPLEX RECEPTACLE WITH USB CHARGER. CT = SWITCHED RECEP. INDICATES FULL CONTROLLED DEDICATED 20A 125V DUPLEX CH = SWITCHED RECEP. INDICATES HALF CONTROLLED DEDICATED 20A 125V DUPLEX
X	SURFACE METAL RACEWAY WITH RECEPTACLE @ X" O.C.

SHEET INDEX

GENERAL NOTES

1. "GENERAL NOTES" APPLY TO ALL DRAWINGS. "SHEET NOTES" APPLY TO ALL OF THE SHEETS ON WHICH THEY OCCUR. "KEYNOTES" APPLY ONLY WHERE CALLED OUT.
2. ALL EQUIPMENT SHOWN IN BOLD IS TO BE PROVIDED BY CONTRACTOR UNLESS OTHERWISE NOTED.
3. BRANCH CIRCUIT CONDUCTORS, NOT OTHERWISE IDENTIFIED SHALL BE A MINIMUM 12 AWG FOR RUNS 70 FEET OR LESS AND A MINIMUM 10 AWG FOR RUNS GREATER THAN 70 FEET. QUANTITY AND SIZE SHALL BE "AS REQUIRED" TO SERVE AND CONTROL DEVICE(S) OR EQUIPMENT WITH A MAXIMUM VOLTAGE DROP OF THREE PERCENT. WHERE CONTRACTOR CHOOSES TO RUN MORE THAN THREE CURRENT CARRYING CONDUCTORS WITHIN ONE RACEWAY OR CABLE, CONDUCTORS SHALL BE INCREASED IN SIZE TO COMPENSATE FOR THE DERATING REQUIRED PER NEC SECTION 310.15. CONDUCTOR AMPACITIES SHALL BE TAKEN FROM THE 75°C COLUMN.
4. MINIMUM CONDUIT IN EXTERIOR AND UNDERGROUND LOCATIONS TO BE 1". MINIMUM CONDUIT FOR INTERIOR BRANCH CIRCUITS TO BE 3/4". .
5. CONTRACTOR SHALL PROVIDE CONDUIT AND WIRE FOR ALL CIRCUITS SHOWN ON DRAWINGS.
6. WHERE EQUIPMENT PART NUMBERS ARE SHOWN ON THESE PLANS THEY SHALL SUPERCEDE THE REQUIREMENTS OF THE SPECIFICATIONS.
7. PROVIDE DEDICATED NEUTRAL CONDUCTOR FOR ALL BRANCH CIRCUITS.
8. ALL EQUIPMENT SHOWN IN BOLD LINEWEIGHT SHALL BE PROVIDED AND INSTALLED BY THE CONTRACTOR UNLESS OTHERWISE NOTED. EXISTING ELECTRICAL EQUIPMENT, BACKGROUND AND/OR WORK/EQUIPMENT THAT IS TO BE PROVIDED BY OTHERS IS SHOWN IN LIGHTER LINEWEIGHTS.
9. CONTRACTOR SHALL KEEP A FULL-SIZE DRAWING SET ON SITE AND NOTE ALL DEVIATIONS TO THE CONSTRUCTION DRAWINGS AS WELL AS NOTE LOCATIONS OF CONDUIT RUNS (OR OTHER ITEMS) WHICH ARE NOT SHOWN ON THE CONSTRUCTION DRAWINGS. THESE DRAWINGS SHALL BE TRANSCRIBED UPON COMPLETION OF THE PROJECT ONTO A CLEAN SET AND BECOME THE PROJECTS RECORD DRAWINGS. THEY SHALL BE TURNED OVER TO THE OWNER PRIOR TO FINAL PAYMENT.

PROJECT SYMBOLS/LEGENDS/DESIGNATIONS

CONTROLS & INSTRUMENTATION

SCHEMATIC	PLAN	
	SV	SOLENOID VALVE
	DMS	DIGITAL METERING SYSTEM
	CR	CR = CONTROL RELAY TDR = TIME DELAY RELAY TR = TIMER RELAY
	RTM	RUN TIME METER
R	R	INDICATING LIGHT: W = WHITE G = GREEN A = AMBER R = RED B = BLUE
OFF HAND AUTO	HOA	SELECTOR SWITCH: HOR = HAND/OFF/REMOTE HOA = HAND/OFF/AUTO RO = RUN/OFF
	PB	PUSHBUTTON SWITCH, MOMENTARY ON
	PS	PRESSURE SWITCH, NORMALLY CLOSED
	FS	FLOW SWITCH, NORMALLY CLOSED
	ZS	LIMIT SWITCH, NORMALLY OPEN
	LS	LEVEL SWITCH, CLOSES ON RISING LEVEL
	TS	TS, TEMP. SWITCH, CLOSES ON FALLING TEMP
	TS	NORMALLY OPEN, TIMED CLOSE CONTACT
	TS	NORMALLY CLOSED, TIMED OPEN CONTACT
	TS	NORMALLY OPEN, TIMED OPEN CONTACT
	TS	NORMALLY CLOSED, TIMED CLOSED CONTACT
		POTENTIOMETER
XX	XX	LT = LEVEL TRANSMITTER PT = PRESSURE TRANSMITTER SI = SPEED INDICATOR FT = FLOW TRANSMITTER VB = VIBRATION TRANSMITTER TT = TEMPERATURE TRANSMITTER FI = FLOW INDICATOR
	D	DOOR SWITCH
	OT	OVERTEMPERATURE CUTOUT

POWER

VFD	VARIABLE FREQUENCY DRIVE
SSS, IC, BP	SOLID STATE STARTER, REDUCED VOLTAGE WITH ISOLATION & BYPASS CONTACTORS
	CONDUCTORS NOT CONNECTED.
	CONDUCTORS CONNECTED.
	PULL OUT SWITCH/PLUG-RECEPTACLE CONNECTION
	NORMALLY OPEN CONTACT (WHEN DE-ENERGIZED)
	NORMALLY CLOSED CONTACT (WHEN DE-ENERGIZED)
	UNIT HEATER
	HARDWIRED CONNECTION
	EQUIPMENT TO BE REMOVED
ST	SHUNT TRIP PUSHBUTTON OR KEY-SWITCH
T	THERMOSTAT
	PANELBOARD, SWITCHBOARD, OR SWITCHGEAR. DASHED BOX INDICATES CCDE REQUIRED WORKING CLEARANCE
	CONDUIT CONCEALED IN WALL, CEILING, UNDER FLOOR, IN FLOOR SLAB, OR ROUTED UNDERGROUND
	CONDUIT EXPOSED
	EXISTING CONDUIT ROUTED UNDERGROUND
OE	OVERHEAD ELECTRICAL
	EXTRA-HARD USAGE FLEXIBLE CORD
	CONDUIT FLEXIBLE.
	CONDUIT TURNED UP OR TOWARD
	CONDUIT TURNED DOWN OR AWAY
	CONDUIT CAPPED
	CONDUIT SEALS. CLASS . I DIV. 1 OR DIV 2 EXPLOSION PROOF
P1 P1-1	CONDUIT HOME RUN 3/4"C, 2#12 & 1#12 GND UNLESS SHOWN OTHERWISE. (EXAMPLE SHOWN: TO PANEL P1, CIRCUIT 1)
	CONDUIT HOME RUN - SEE CONDUIT AND WIRE SCHEDULE.
HH1	HANDHOLE WITH DESIGNATION
	JUNCTION BOX
	MANUAL OR AUTOMATIC TRANSFER SWITCH.

SCHEMATIC	PLAN	
30A 2P	CB	CIRCUIT BREAKER, RATING/NO. OF POLES WITH THERMAL MAGNETIC CIRCUIT BREAKER TRIP, UNLESS OTHERWISE NOTED
		GROUND ROD IN GROUND ROD BOX
		BATTERY
	T	TRANSFORMER
3	CT	CURRENT TRANSFORMER, NUMBER INDICATES NUMBER OF C.T.'S
10		MOTOR, NUMBER INDICATES HORSEPOWER
150W		ELECTRIC HEATER, WATTAGE INDICATED
G		GENERATOR
2		MAGNETIC MOTOR STARTER FVNR = FULL VOLTAGE NON-REVERSING FVR = FULL VOLTAGE REVERSING 2 = NEMA SIZE
		MAGNETIC MOTOR STARTER W/DISCONNECT
60A	60A	DISCONNECT SWITCH, NON FUSED (60A) INDICATES AMPERAGE RATING
100AF 200AS	200AS/ 100AF	DISCONNECT SWITCH, FUSED 200=SWITCH RATING, 100=FUSE RATING
60A	60A	CIRCUIT BREAKER DISCONNECT (60A) INDICATES AMPERAGE RATING
M	$M	UTILITY WATT HOUR METER MOTOR RATED SWITCH. WHERE "M" INDICATED, PROVIDE A MANUAL MOTOR STARTER W/OVERLOAD
	M	MOTORIZED LOUVER
	M	EXHAUST FAN

COMMUNICATIONS

#	WALL MOUNTED TELECOMMUNICATIONS OUTLET. 18" AFF, UON. # INDICATES QUANTITY OF VOICE AND DATA JACKS. PULLSTRING ALWAYS PROVIDED. WHERE NO QUANTITY IS NOTED, PROVIDE 2 DATA JACKS, AND PULLSTRING
P	WALL PHONE 43" AFF, PROVIDE 1 DATA JACK, AND PULLSTRING
#	FLOOR OR CEILING MOUNTED TELECOMMUNICATIONS OUTLET. # INDICATES QUANTITY OF VOICE AND DATA JACKS. PULLSTRING ALWAYS PROVIDED. WHERE NO QUANTITY IS NOTED, PROVIDE 4 DATA JACKS, AND PULLSTRING
WAP	WIRELESS ACCESS PORT; SEE SPECIAL SYSTEMS CONNECTION SCHEDULE, WHEN INCLUDED ON PLANS.
	CABLE TRAY
A/V	RECESSED AUDIO FLOOR BACK BOX, OUTLET AND CONDUIT

LIGHTING

	LUMINAIRE, PENDANT
	LUMINAIRE, SURFACE
	LUMINAIRE, RECESSED
	STRIP, SURFACE OR PENDANT AS INDICATED IN LUMINAIRE SCHEDULE
	LUMINAIRE, EMERGENCY
	LUMINAIRE, WALL MOUNT
	LIGHTED EXIT SIGN, ARROW INDICATES DIRECTION
	EMERGENCY WALL PACK
	LUMINAIRE, POLE MOUNTED

LUMINAIRE CONTROLS

$x	SWITCH 2 = DOUBLE POLE SWITCH 3 = THREE WAY SWITCH 4 = FOUR WAY SWITCH P = SWITCH AND PILOT LAMP K = KEY OPERATED SWITCH T = SWITCH WITH TIMER MS = MASTER SWITCH TO CONTROL ALL FIXED LUMINAIRES IN GUEST UNIT D = DIMMING
PC	PHOTOCELL
PE	PHOTO ELECTRIC SENSOR
PR	NEW LUMINAIRE CONTROL. SEE LIGHTING CONTROL LEGEND LOCATED ON LIGHTING SHEETS. CEILING MOUNTED OCCUPANCY SENSOR(S).

CIRCUIT DESIGNATION

LUMINAIRE, TYPICAL:

1 E NL a — a X-X, E X-X, a/E X-X

"1"	INDICATES TYPE PER LUMINAIRE SCHEDULE.
"NL"	INDICATES NIGHT LIGHT LUMINAIRE.
X-X	INDICATES PANELBOARD AND CIRCUIT PROVIDING POWER TO SWITCHLEG INDICATED FOR LUMINAIRES CONTAINED IN SAME ROOM/AREA.
"a"	INDICATES CONTROL PER SWITCH.
"E"	INDICATES POWER TO EMERGENCY LIGHTING CONTAINED IN SAME ROOM/AREA.

RECEPTACLE, TYPICAL: PNL-4

"PNL"	INDICATES POWER SOURCE.
"4"	INDICATES CIRCUIT NUMBER.

OUTLET MOUNTING HEIGHTS

SPECIAL OUTLET HEIGHTS ARE SHOWN ON THE ELECTRICAL DRAWINGS OR ON THE ARCHITECTURAL DRAWINGS. IF SPECIAL OUTLET HEIGHTS ARE NOT SHOWN OR REQUIRED, THEN LOCATE OUTLETS AS NOTED BELOW. OUTLET HEIGHTS ARE MEASURED FROM THE FINISHED FLOOR TO THE CENTERLINE OF THE OUTLET UNLESS OTHERWISE NOTED.

RECEPTACLES	18 INCHES (460 mm) VERTICALLY MOUNTED
LIGHT SWITCHES	42 INCHES (1200 mm) VERTICALLY MOUNTED
PANELBOARDS	72 INCHES (1830 mm) TO TOP OF PANELBOARD
TELECOM OUTLET, DESK HANDSET	18 INCHES (460 mm) VERTICALLY MOUNTED

THE SYMBOLS, ABBREVIATIONS AND NOTES ON THIS SHEET ARE INTENDED TO BE GENERAL AND COMPREHENSIVE

AND DO NOT ALL APPLY TO THIS PROJECT

GRADY JAMES WEISZ — STATE OF WASHINGTON — 48918 — REGISTERED PROFESSIONAL ENGINEER

3/12/2021

Trindera
2120 N LAKEWOOD DR STE B
COEUR D ALENE, IDAHO 83814
(208) 417-2967

SHEET 36 OF -

WW COLLECTION SYSTEM & WWTF IMPROVEMENTS PROJECT
ELECTRICAL LEGEND
MARCH 2021

THE CHEHALIS TRIBE

CENTURY WEST ENGINEERING
5500 MEADOWS RD. #250 | LAKE OSWEGO, OR 97035
WWW.CENTURYWEST.COM | 503.419.2130

DESIGNED: R. DETERS
DRAWN: J. ROBERTS
CHECKED: G. WIESZ
CWE PROJECT NO. 41445001.01

SCALE: PLAN AS SHOWN; PROFILE HORIZ. VERT.; ONE INCH (REF)

NO.	DATE	REVISION	BY	APRVD.

FILE: C:\Users\kristowell\AppData\Local\Temp\AcPublish_10868\41445001.01.dwg 03/12/2021 - 11:27am

SHEET NOTES

1. CONTRACTOR TO INSTALL SIMPLEX AND DUPLEX LIFT STATIONS BASED ON LOCATIONS SHOWN ON CIVIL DRAWINGS (C SERIES SHEETS).

KEY NOTES

1. FURNISH AND INSTALL NEW PACKAGED SIMPLEX PUMP STATION.
2. FURNISH AND INSTALL NEW PACKAGED DUPLEX PUMP STATION WITH FABRICATED WETWELL AND VALVE VAULT.
3. FURNISH AND INSTALL NEW DUPLEX PUMP STATION AND PUMPS IN THE EXISTING PUMP STATION CONCRETE VAULT.

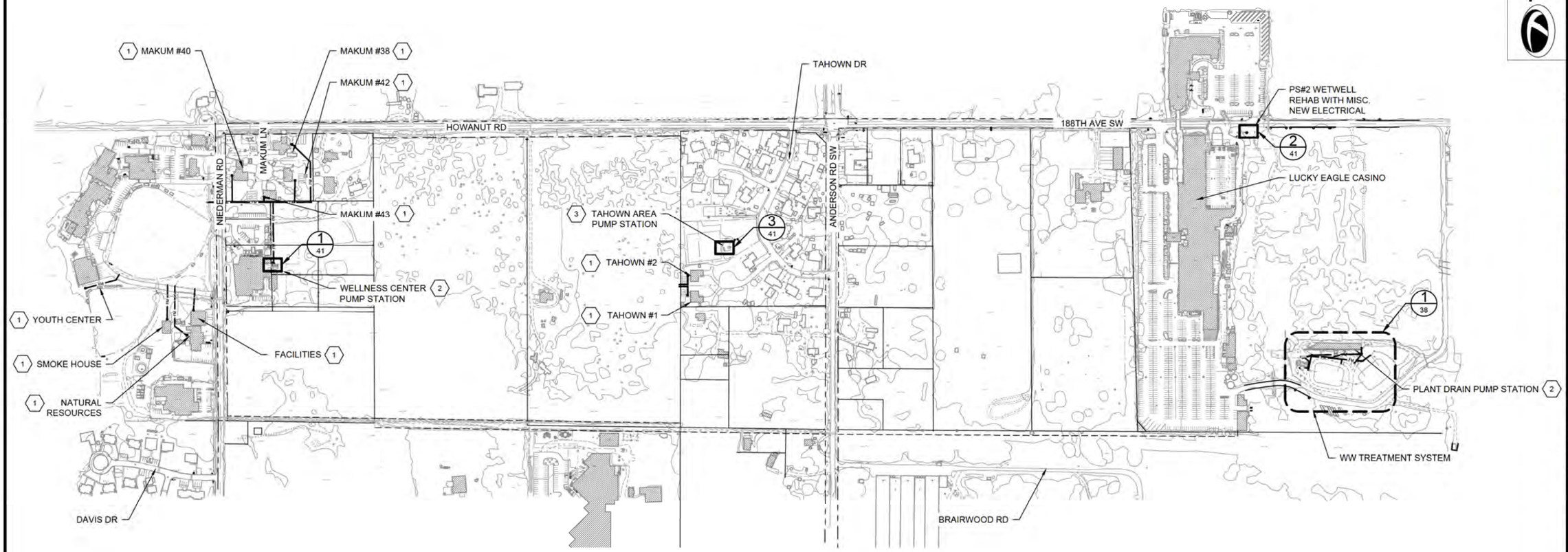

ELECTRICAL AREA PLAN

SCALE= N.T.S.

1
-

DIGITAL SIGNATURE
3/12/21

Trindera
2120 N LAKEWOOD DR STE B
COEUR D ALENE, IDAHO 83814
(208) 417-2967

SHEET 37 OF -

WW COLLECTION SYSTEM & WWTF IMPROVEMENTS PROJECT
ELECTRICAL AREA PLAN
MARCH 2021

THE CHEHALIS TRIBE

CENTURY WEST ENGINEERING
5500 MEADOWS RD. #250 | LAKE OSWEGO, OR 97035
WWW.CENTURYWEST.COM | 503.419.2130

DESIGNED: R. DETERS
DRAWN: K. KIDWELL
CHECKED: G. WIESZ
CWE PROJECT NO. 41445001.01

SCALE
PLAN: AS SHOWN
PROFILE: HORIZ. / VERT.
ONE INCH (REF)

NO.	DATE	REVISION	BY	APRVD

F:\E C:\Users\kiowen\AppData\Local\Temp\AcPublish_10808\41445.001.01-37 THRU 41.dwg 03/12/2021 - 11:27am

KEY NOTES

1. TREATMENT BUILDING IS UNCLASSIFIED TREATED WASTEWATER (FINAL TREATMENT). REFERENCE NFPA 820, 2020 VERSION, TABLE 5.2.2 ROWS 21 & 27.

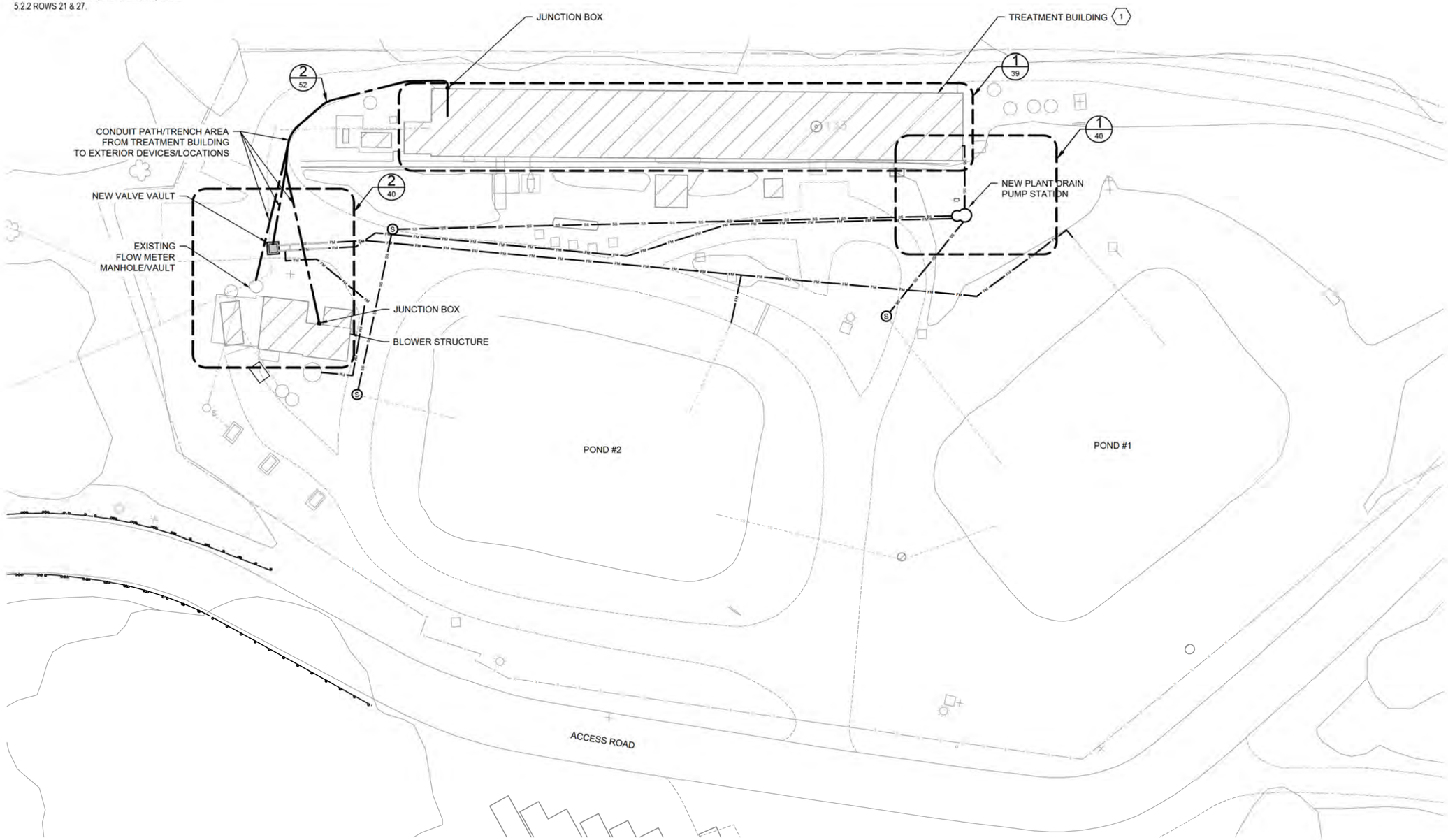

WWTF SITE PLAN

1

SCALE= 1" = 20'

0 20' 40'

N

GRADY JAMES WEISZ STATE OF WASHINGTON 48914 REGISTERED PROFESSIONAL ENGINEER
3/12/2021

RICHARD JOHN DETERS STATE OF WASHINGTON 38881 REGISTERED PROFESSIONAL ENGINEER
DIGITAL SIGNATURE 3/12/21

Trindera
2120 N LAKEWOOD DR STE B
COEUR D ALENE, IDAHO 83814
(208) 417-2967

SHEET 38 OF -

WW COLLECTION SYSTEM & WWTF IMPROVEMENTS PROJECT
WWTP SITE PLAN
MARCH 2021

THE CHEHALIS TRIBE

CENTURY WEST ENGINEERING
5500 MEADOWS RD. #250 | LAKE OSWEGO, OR 97035
WWW.CENTURYWEST.COM | 503.419.2130

DESIGNED: R. DETERS
DRAWN: K. KIDWELL
CHECKED: G. WIESZ
CWE PROJECT NO. 41445001.01

SCALE
PLAN: AS SHOWN
PROFILE: HORIZ. / VERT.
ONE INCH (REF)

NO.	DATE	REVISION	BY	APRVD.

FILE: C:\Users\kidwell\AppData\Local\Temp\AcPublish_10888\41445.001.01-37 THRU 41.dwg 03/12/2021 - 11:27am

SHEET NOTES

1. ELECTRICAL ROOM WEST WALL AND ITS DOORWAY/OPENING'S EXACT LOCATION AND EXISTING EQUIPMENT SIZES ARE DIAGRAMMATIC. CONTRACTOR TO VALIDATE DIMENSIONS AND CONDUIT/WIRE RUN LENGTHS PRIOR TO DEMO AND CONSTRUCTION.
2. CONTRACTOR MAY COMBINE S, C, AND P CONDUCTORS WITH COMMON RUNS INTO LARGER RESPECTIVE CONDUITS BY TYPE WHILE MAINTAINING REQUIRED CONDUIT FILL.
3. FILTER BUILDING ELECTRICAL ROOM IS CONCRETE SURROUND WITH WOOD/SHEET ROCK INTERIOR WALLS. ATTACHED TO ELECTRICAL ROOM IS A STRUCTURE STEEL FRAME BUILDING WITH WOOD TRUSSES. FOR CONDUIT RUNS WITHIN THE ELECTRICAL ROOM, ROUTE OVERHEAD. FOR CONDUITS RUNS WITHIN THE STEEL FRAME BUILDING, ROUTE ALONG WOOD TRUSSES.

KEY NOTES

1. PROVIDE NEW VAPORTIGHT LED LIGHT FIXTURE HOLOPHANE EMS-L96-600LM-LPPCL-WD-MVOLT-5000K-90CRI OR APPROVED EQUAL MOUNTED UNDER UPPER WALKWAY (TYPICAL OF 7). PROVIDE 3/4" CONDUIT WITH 2#12, 1#12G FROM NEAREST EXISTING UNSWITCHED LIGHT FIXTURE CIRCUIT.
2. PROVIDE NEW VAPORTIGHT LED LIGHT FIXTURE HOLOPHANE EMS-L96-600LM-LPPCL-WD-MVOLT-5000K-90CRI OR APPROVED EQUAL SUSPENDED FROM ROOF STRUCTURE ABOVE TANKS (TYPICAL OF 6). PROVIDE 3/4" CONDUIT WITH 2#12, 1#12G FROM NEAREST EXISTING LIGHT FIXTURE CIRCUIT.
3. INSTALL NEW WIRING FROM EXISTING ELECTRICAL ROOM PANEL PL WITH NEW PVC CONDUIT, SWITCH AND OUTLET BOXES, DRIP PROOF COVERS AND NEW SWITCHES AND RECEPTACLES. CONDUIT SUPPORT STRAPS SHALL BE PVC. PROVIDE GFCI PROTECTION ON ALL WIRING.
4. RELOCATE EXISTING FLOWMETER FIT-010 AND CONFIRM LOCATION AND WIRING. IF EXISTING FIT-010 CANNOT BE USED, PROVIDE DIRECT ANALOG WIRING FROM FE-010 TO THE NEW MCP-WWTP/PLC-WWTP.

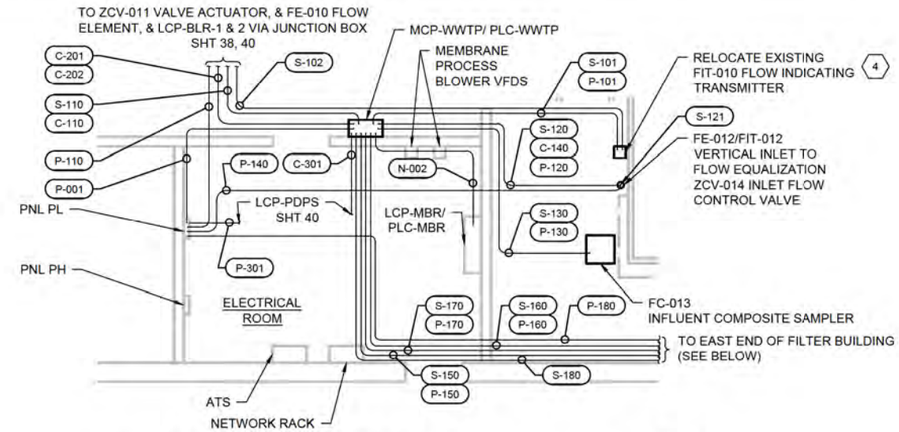

WEST END OF FILTER BUILDING

SCALE= 3" = 1'-0"

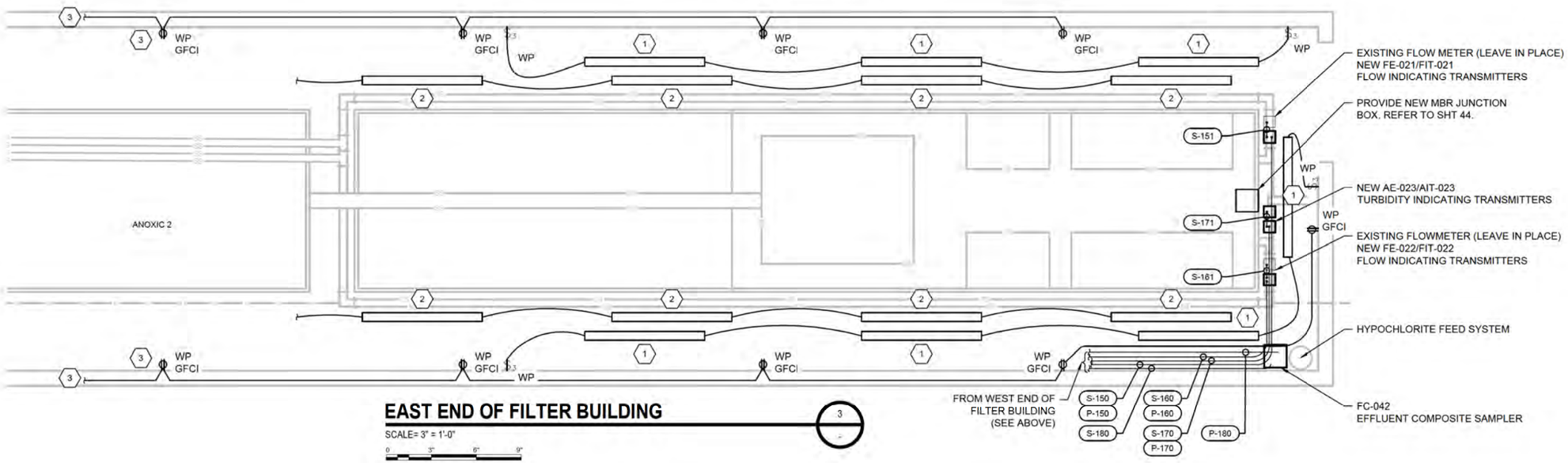

EAST END OF FILTER BUILDING

SCALE= 3" = 1'-0"

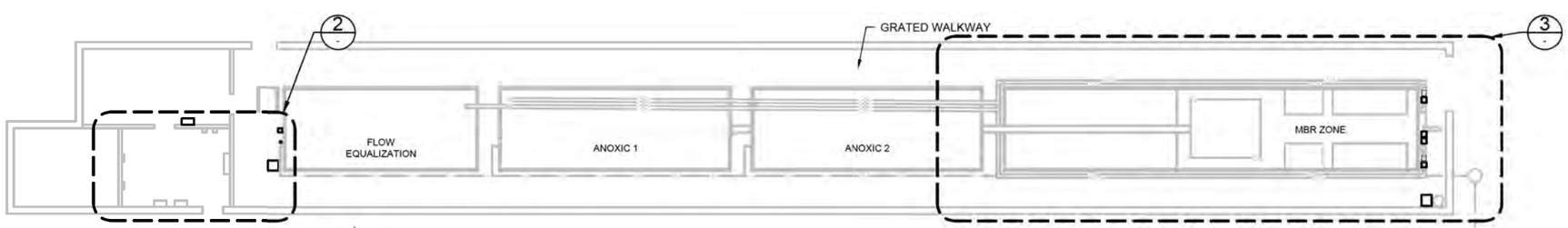

FILTER BUILDING ELECTRICAL PLAN

SCALE= 1" = 10'

DIGITAL SIGNATURE 3/12/21

Trindera
2120 N LAKEWOOD DR STE B
COEUR D ALENE, IDAHO 83814
(208) 417-2967

SHEET 39 OF -

WW COLLECTION SYSTEM & WWTF IMPROVEMENTS PROJECT
FILTER BUILDING ELECTRICAL PLAN
MARCH 2021

THE CHEHALIS TRIBE

CENTURY WEST ENGINEERING
5500 MEADOWS RD. #250 | LAKE OSWEGO, OR 97035
WWW.CENTURYWEST.COM | 503.419.2130

DESIGNED: R. DETERS
DRAWN: K. KIDWELL
CHECKED: G. WIESZ
CWE PROJECT NO. 41445001.01

SCALE: PLAN AS SHOWN; PROFILE HORIZ. / VERT. ONE INCH (REF)

NO.	DATE	REVISION	BY	APRVD

FILE: C:\Users\kkidwell\AppData\Local\Temp\AcPublish_10688\41445.001.01-37 THRU 41.dwg 03/12/2021 - 11:27am

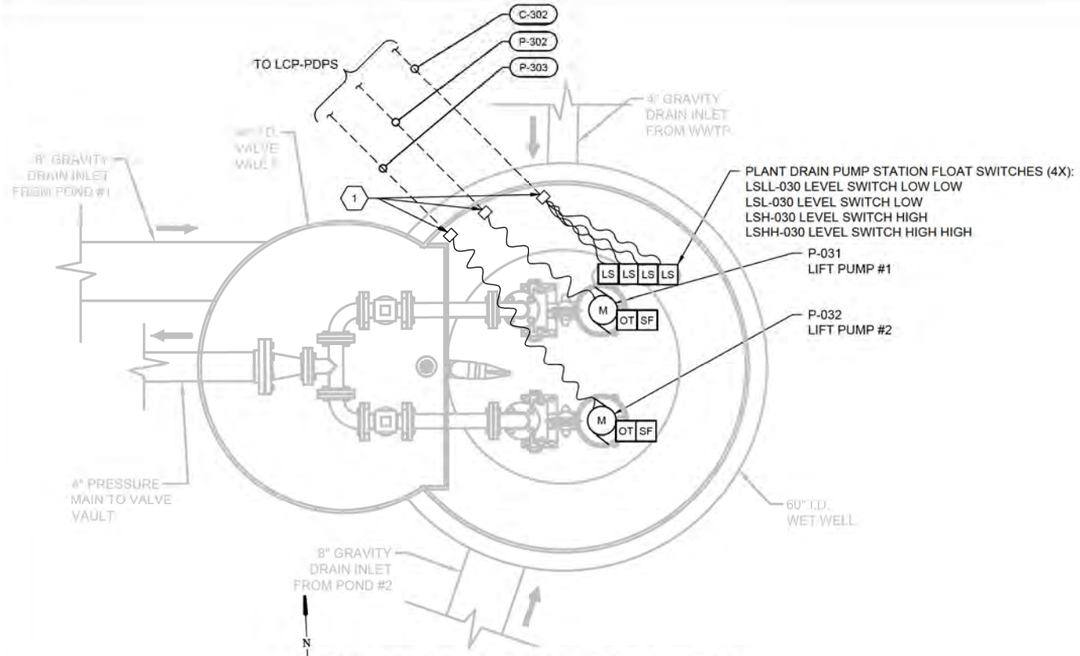

TOP VIEW NEW PLANT DRAIN PUMP STATION

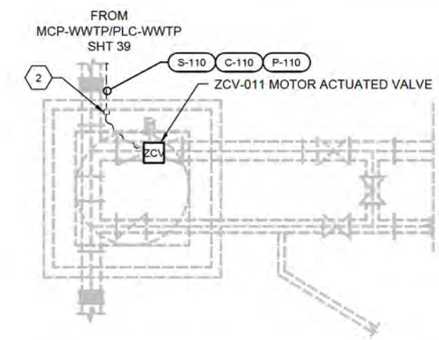

VAULT PIPING DETAIL (PLAN VIEW)

SCALE= NTS

KEY NOTES

1. UTILIZE PACKAGED SYSTEM SPLICE EQUIPMENT AND METHOD. GROUTED CONDUIT PENETRATIONS. AREA IS A CLASS I, DIVISION 1 HAZARDOUS AREA IN ACCORDANCE WITH NFPA 820 - 2020, TABLE 4.2.2, ROW 14.
2. GROUTED CONDUIT PENETRATIONS. AREA IS A CLASS I, DIVISION 2 HAZARDOUS AREA IN ACCORDANCE WITH NFPA 820 - 2020, TABLE 4.2.2, ROW 34.
3. CONTRACTOR TO REMOVE EXISTING BLOWER MOTORS AND ASSOCIATED DISCONNECTS (LOCATED EXTERIOR UNDER ROOF OVERHANG/LEAN-TO). INSTALL NEW BLOWER LCP-BLR-1 STARTER PANEL AND LCP-BLR-2 STARTER PANEL IN PLACE OF EXISTING DISCONNECTS (LOCATED EXTERIOR UNDER ROOF OVERHANG/LEAN-TO). CONTRACTOR TO REPLACE EXISTING BREAKERS FOR BLOWER MOTORS WITHIN LCP-BLR PANELBOARD (LOCATED INTERIOR BUILDING), UTILIZE EXISTING SPACES ALLOCATED FOR EXISTING BLOWER MOTOR AND ADDITIONAL OPEN SPACES 2, 4, 6, FOR TWO THE NEW 2 POLE BREAKERS. INSTALL NEW CONDUCTORS FROM EXISTING LCP-BLR PANELBOARD TO NEW LCP-BLR-1 STARTER PANEL, NEW LCP-BLR-2 STARTER PANEL, NEW 5 HP BLOWER NO. 1 MOTOR, AND NEW 5 HP BLOWER NO. 2 MOTOR.

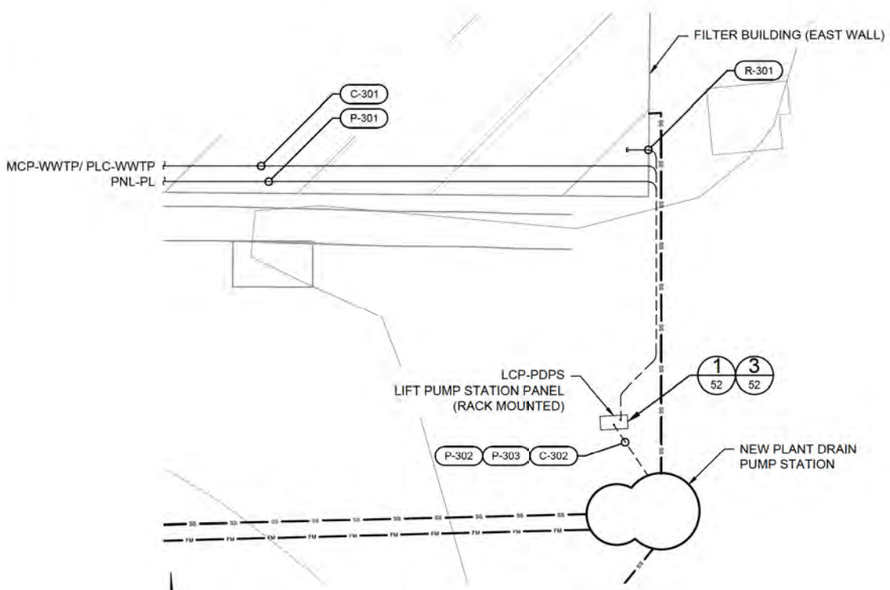

PLANT DRAIN PUMP STATION SITE ELECTRICAL PLAN

SCALE= 1" = 5'

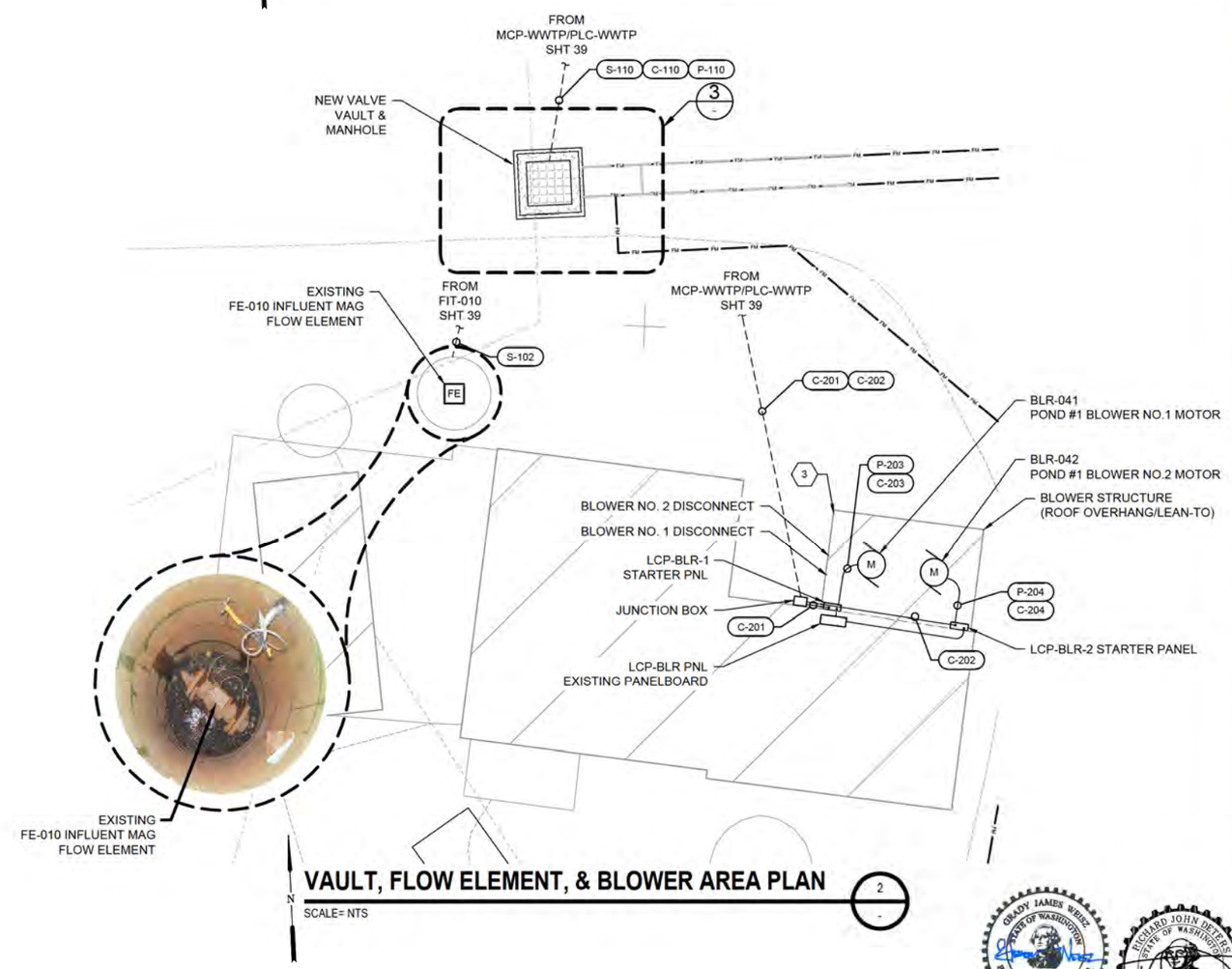

VAULT, FLOW ELEMENT, & BLOWER AREA PLAN

SCALE= NTS

GRADY JAMES WIESZ STATE OF WASHINGTON 48914 REGISTERED PROFESSIONAL ENGINEER
3/12/2021

RICHARD JOHN DETERS STATE OF WASHINGTON 38881 REGISTERED PROFESSIONAL ENGINEER
DIGITAL SIGNATURE
3/12/21

Trindera
2120 N LAKEWOOD DR STE B
COEUR D ALENE, IDAHO 83814
(208) 417-2967

SHEET 40 OF -

WW COLLECTION SYSTEM & WWTF IMPROVEMENTS PROJECT
PLT DRAIN, VLV VLT, FE, & BLR ELEC
MARCH 2021

THE CHEHALIS TRIBE

CENTURY WEST ENGINEERING
5500 MEADOWS RD. #250 | LAKE OSWEGO, OR 97035
WWW.CENTURYWEST.COM | 503.419.2130

DESIGNED: R. DETERS
DRAWN: K. KIDWELL
CHECKED: G. WIESZ
CWE PROJECT NO. 41445001.01

SCALE
PLAN: AS SHOWN
PROFILE: HORIZ. / VERT.
ONE INCH (REF)

NO.	DATE	REVISION	BY	APRVD.

FILE: C:\Users\kidwell\AppData\Local\Temp\AcPublish_10588\41445.001.01-37 THRU 41.dwg 03/12/2021 - 11:27am

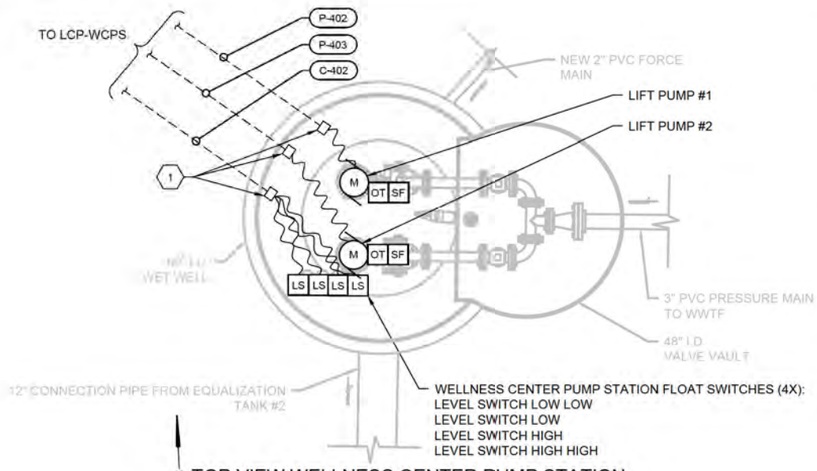

N TOP VIEW WELLNESS CENTER PUMP STATION

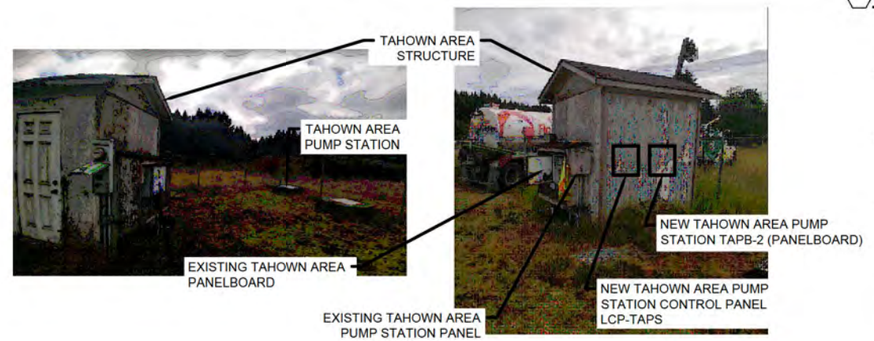

TAHOWN AREA PUMP STATION PHOTO DETAIL

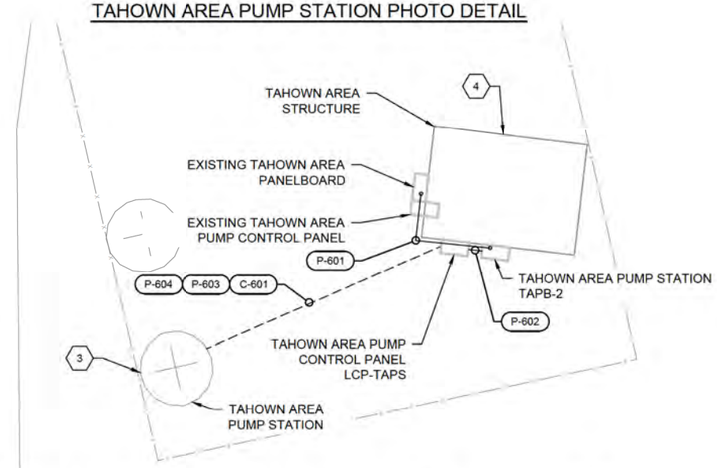

TAHOWN AREA WETWELL PUMP STATION

SCALE= 1" = 5'

3 / - 10

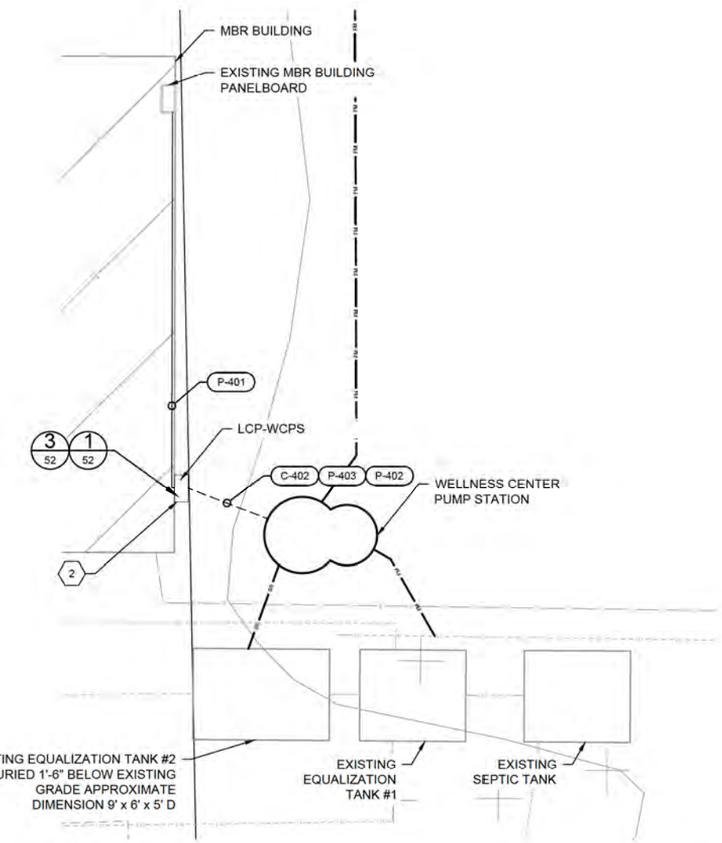

WELLNESS CENTER PUMP STATION

SCALE= 1" = 5'

1 / - 10

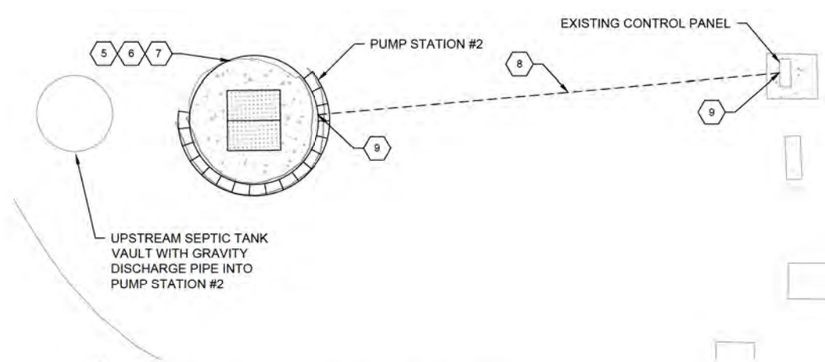

PUMP STATION #2 WETWELL REHAB

SCALE= 1" = 5'

2 / - 10

KEY NOTES

1. UTILIZE PACKAGED SYSTEM SPLICE EQUIPMENT AND METHOD. GROUTED CONDUIT PENETRATIONS.
2. CONTRACTOR TO INSTALL NEW LCP-WCPS PANEL FOR THE NEW WELLNESS CENTER PUMP STATION. FEEDER TO NEW LCP-WCPS FROM EXISTING MBR PANELBOARD WITHIN THE MBR BUILDING.
3. CONTRACTOR TO REMOVE EXISTING PUMPS AND INSTALL NEW DUPLEX PUMP STATION IN TAHOWN AREA. INSTALL NEW CONDUIT AND WIRE FROM EXISTING FEEDER LOCATION.
4. CONTRACTOR SHALL DISCONNECT AND REMOVE EXISTING METER/PANELBOARD. PROVIDE NEW NEMA 3R 100AMP 120/240 VOLT UTILITY METER MAIN AND NEMA 3R LOADCENTER. PROVIDE NEW CONDUIT WITH 3#3, 1#8G FROM THE METER TO THE LOADCENTER. RECONNECT EXISTING PARK LIGHTS CIRCUIT TO NEW LOAD CENTER. RECONNECT THE EXISTING PUMP PANEL TO THE NEW PANELBOARD. PROVIDE NEW 1/2" CONDUIT, 2#10, 1#10G TO EACH OF THE NEW PUMP PANELS. PROVIDE A NEW WEATHERPROOF ENCLOSURE AND 30 AMP/ 240 VOLT RECEPTACLE TO REPLACE THE EXISTING 30 AMP RECEPTACLE AND AND NEW WEATHERPROOF 120 VOLT GFCI RECEPTACLE TO REPLACE THE EXISTING 120 VOLT RECEPTACLE IN THE EXISTING PANEL. PROVIDE ALL OTHER CONDUIT, CIRCUIT BREAKERS AND WIRING AS REQUIRED TO REPLACE THE EXISTING SERVICE EQUIPMENT AND ALL OTHER APPURTENANCES AS REQUIRED FOR A COMPLETE AND OPERATIONAL SYSTEM.
5. PROVIDE NEW FLOAT SWITCHES AND INTERNAL SPLICE BOX TO REPLACE THE EXISTING FLOAT SWITCHES AND INTERNAL SPLICE BOX IN THE WET WELL. SPLICE BOX SHALL BE ORENCO #SBX OR APPROVED EQUAL. THE SPLICE BOX SHALL BE FITTED WITH THE REQUIRED NUMBER AND SIZE OF CORD GRIPS AND CONDUIT COUPLING TO REPLACE THE EXISTING SPLICE BOX AND FLOAT SWITCHES.
6. NEW FLOAT SWITCHES SHALL BE SECURED AT ORIGINAL LEVELS TO OPERATE THE PUMP(S). COORDINATE WITH OWNER DURING INSTALLATION TO DETERMINE PROPER SETTINGS TO OPERATION STATION. EXCESS FLOAT SWITCH CABLING SHALL BE SECURED TO ALLOW FLOAT OPERATION WITHOUT BECOMING TANGLED. FLOAT SWITCHES SHALL BE ORENCO SIGNAL RATED MECHANICAL (NON MERCURY) MODEL "P" NORMALLY-OPEN DEFAULT STATE (CONTACT OPEN WHEN FLOAT IS HANGING), OR APPROVED EQUAL. CONDUCTOR SPLICES SHALL BE MADE WITH WATERPROOF SPLICES.
7. CONTRACTOR SHALL REPLACE THE EXISTING MOTOR JUNCTION BOX IN THE WET WELL WITH A NEW CLASS I, DIVISION 1 & 2, TYPE GRX JUNCTION BOX. THE NEW BOX SHALL HAVE THE APPROPRIATE SIZED STEEL CONNECTORS WITH NEOPRENE GLANDS FOR EACH CABLE. UNUSED BOX OPENINGS SHALL BE CLOSED WITH A THREADED PLUG.
8. CONTRACTOR SHALL REPLACE ALL EXISTING POWER WIRING FROM THE CONTROL PANEL TO THE PUMP MOTOR AND SIGNAL WIRING FROM THE CONTROL PANEL TO THE FLOAT SPLICE BOX. CONDUCTORS FOR FLOATS SHALL BE #14 AWG COPPER TYPE XHHW. CONDUCTORS FOR THE PUMP MOTORS SHALL BE COPPER TYPE XHHW RATED FOR THE AMPERAGE RATING OF THE PUMP MOTORS.
9. WHERE CONDUIT SEAL FITTINGS EXIST ON CONDUITS ASSOCIATED WITH THE POWER AND SIGNAL WIRING CONDUITS FOR THE WET WELL, THE CONDUIT SEAL FITTINGS SHALL BE REPLACED WITH NEW CLASS I, DIVISION 1 & 2 SEALS. NEW SEALS SHALL BE FILLED ONCE NEW CONDUCTORS ARE INSTALLED AND PRIOR TO PUMP OPERATION. ANY EXISTING SEALS ON CONDUITS CONNECTED TO THE CONTROL PANEL SHALL BE PROPERLY SEALED PRIOR TO CONTROL PANEL OPERATION. NEW CONDUCTORS SHALL BE PROPERLY CONNECTED TO THE APPROPRIATE TERMINATION POINTS IN THE CONTROL CABINET TO PROVIDE A COMPLETE AND OPERATIONAL SYSTEM. ALL TERMINATIONS IN THE WET WELL SHALL BE MADE WITH WATERPROOF WIRE CONNECTORS.
10. PUMP STATIONS ARE PRECEDED BY PRIMARY SEDIMENTATION AS AN EFFLUENT SYSTEM, HOWEVER, DESIGN SHALL BE BASED ON CLASS 1 DIVISION 1.

DIGITAL SIGNATURE
3/12/21

Trindera
2120 N LAKEWOOD DR STE B
COEUR D ALENE, IDAHO 83814
(208) 417-2967

SHEET 41 OF -

WW COLLECTION SYSTEM & WWTF IMPROVEMENTS PROJECT
WELLNESS, TAHOWN & PS#2 ELEC
MARCH 2021

THE CHEHALIS TRIBE

CENTURY WEST ENGINEERING
5500 MEADOWS RD. #250 | LAKE OSWEGO, OR 97035
WWW.CENTURYWEST.COM | 503.419.2130

DESIGNED: R. DETERS
DRAWN: K. KIDWELL
CHECKED: G. WIESZ
CWE PROJECT NO. 41445001.01

SCALE
PLAN: AS SHOWN
PROFILE: HORIZ. / VERT.
ONE INCH (REF)

NO	DATE	REVISION	BY	APRVD

FILE: C:\Users\kinowell\AppData\Local\Temp\AcPublish_10688\41445.001.01-37 THRU 41.dwg 03/12/2021 - 11:27am

KEY NOTES

1. NOT ALL CIRCUITS SHOWN. REFER TO THE PANEL SCHEDULES FOR ADDITIONAL INFORMATION.
2. POND #1 BLOWER NO.1 AND BLOWER NO.2 ARE DIRECT 5HP BLOWER MOTOR REPLACEMENTS TO EXISTING BLOWER STRUCTURE PANELBOARD.

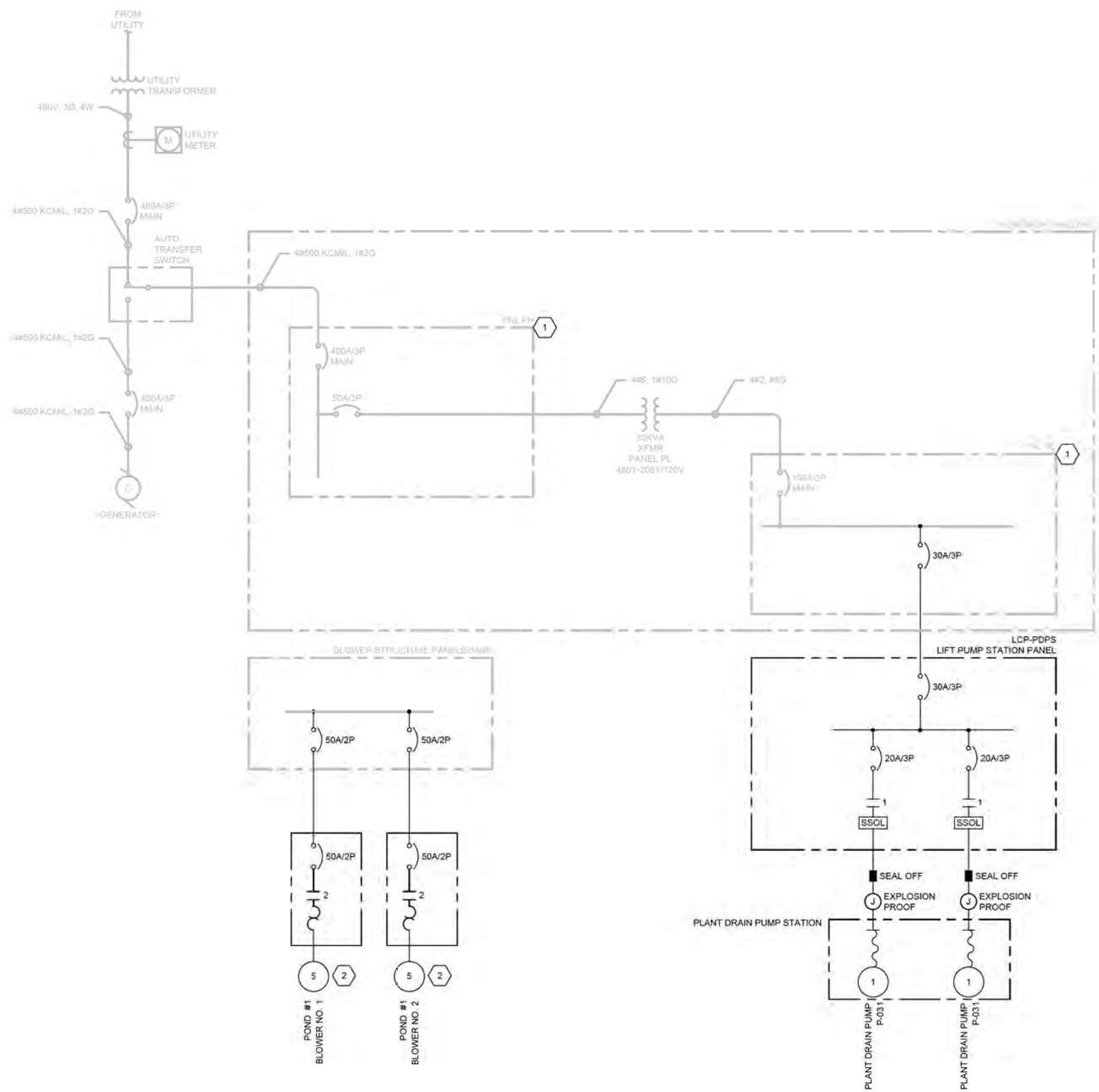

PANELBOARD NO: PH (EXISTING)

VOLTAGE:	480Y/277	**BUS RATING (A):**	400	**ENCLOSURE:**	NEMA 1
PHASE:	3	**MAIN OC DEVICE:**	400/3	**MOUNTING:**	SURFACE
WIRE:	4+GND	**INTERRUPTING RATING (KA):**	22	**LOCATION:**	
200% NEUTRAL:	NO	**SERVICE ENTRANCE LABEL:**	NO		

CKT NO.	DESCRIPTION	CONNECTED LOAD (VA) LTS	REC	MECH	MISC	OCP AMPS	P		OCP AMPS	P	CONNECTED LOAD (VA) LTS	REC	MECH	MISC	DESCRIPTION	CKT NO.
1								A						7,981	30 KVA	2
3								B	50	3				7,981	TRANSFORMER FOR	4
5								C						7,981	PANEL PL	6
7								A					2,815			8
9								B	20	3			2,815		HEATING UNIT	10
11								C					2,815			12
13								A	20	1					LIGHTS OUTSIDE	14
15								B	20	1					LIGHTS OUTSIDE	16
17								C	20	1					LIGHTS OUTSIDE	18
19								A	20	1					LIGHTS OUTSIDE	20
21								B	20	1					LIGHTING CONTACTOR	22
23								C							SPACE	24

LOAD SUMMARY

	LTS	REC	MECH	MISC	SPARE	TOTAL				PHASE BALANCE	
CONNECTED LOAD (KVA)	0.0	0.0	8.4	23.9	—	32.4		480	LINE-TO-LINE VOLTS	PHASE A (KVA)	11
DEMAND FACTOR	1.25	NEC	1.00	1.00	20%	—		39	CONNECTED AMPS	PHASE B (KVA)	11
DESIGN LOAD (KVA)	0.0	0.0	8.4	23.9	6.5	38.9		47	DESIGN AMPS	PHASE C (KVA)	11

PANELBOARD NO: PL (EXISTING)

VOLTAGE:	208Y/120	**BUS RATING (A):**	100	**ENCLOSURE:**	NEMA 1
PHASE:	3	**MAIN OC DEVICE (A/PHASE):**	100/3	**MOUNTING:**	SUFACE
WIRE:	4+GND	**INTERRUPTING RATING (KA):**	10	**LOCATION:**	RM ELEC
200% NEUTRAL:	NO	**SERVICE ENTRANCE LABEL:**	NO		

CKT NO.	DESCRIPTION	CONNECTED LOAD (VA) LTS	REC	MECH	MISC	OCP AMPS	P		OCP AMPS	P	CONNECTED LOAD (VA) LTS	REC	MECH	MISC	DESCRIPTION	CKT NO.
1	MAIN CONTROL PANEL					30	1	A	20	1		720			CHEM ROOM RECPT	2
3	ELEC ROOM LTS					20	1	B	20	1		720			ELEC ROOM RECPT	4
5	CHEM TEST RM LTS					20	1	C	20	2					HEAT	6
7	GENERAL CONTROL					20	2	A								8
9	POWER							B	20	1					HL VALVE DIVERTER	10
11	RECPT O.S. WALL					20	1	C	20	1					DATA BASE RACK	12
13	RECPT O.S. WALL					20	1	A	20	1					LIGHTS OUTSIDE	14
15	SPARE					20	1	B	20	1					LIGHTS OUTSIDE	16
17	SPARE					20	1	C	20	1					EXHAUST FAN AT END	18
19	RECPT O.S. WALL					20	1	A	20	1					**SAMPLER**	20
21	SPARE					20	1	B	20	1					**SAMPLER**	22
23	REMOTE ALARM PNL					20	1	C	20	1					**TURBIDIMETER**	24
25								A	20	1					**TURBID CONTROLLER**	26
27	EXHAUST FAN FAR END OF BLDG					20	3	B	20	1					**EAST END FILTER BLDG**	28
29								C	20	1					**FLOW METER**	30
31	HEAT PUMP					30	2	A	20	1					**FLOW METER**	32
33								B	20	1					SPARE	34
35	ROOF EXHAUST FAN					20	1	C	**20**	**1**					SPARE	36
37	ROOF EXHAUST FAN					20	1	A						**2,106**		38
39	SPARE					20	1	B	**15**	**3**				**2,106**	**LCP-PDPS**	40
41	SPARE					20	1	C						**2,106**		42

LOAD SUMMARY

	LTS	REC	MECH	MISC	SPARE	TOTAL				PHASE BALANCE	
CONNECTED LOAD (KVA)	0.0	1.4	0.0	6.3	—	7.8		208	LINE-TO-LINE VOLTS	PHASE A (KVA)	3
DEMAND FACTOR	1.25	NEC	1.00	1.00	20%	—		22	CONNECTED AMPS	PHASE B (KVA)	3
DESIGN LOAD (KVA)	0.0	1.4	0.0	6.3	1.6	9.3		26	DESIGN AMPS	PHASE C (KVA)	2

3/12/2021

DIGITAL SIGNATURE 3/12/21

Trindera
2120 N LAKEWOOD DR STE B
COEUR D ALENE, IDAHO 83814
(208) 417-2967

SHEET 42 OF -

WW COLLECTION SYSTEM & WWTF IMPROVEMENTS PROJECT
FILTER BUILDING ONE-LINE DIAGRAM
MARCH 2021

THE CHEHALIS TRIBE

CENTURY WEST ENGINEERING
5500 MEADOWS RD. #250 | LAKE OSWEGO, OR 97035
WWW.CENTURYWEST.COM | 503.419.2130

DESIGNED: R. DETERS
DRAWN: J. ROBERTS
CHECKED: G. WIESZ
CWE PROJECT NO. 41445001.01

SCALE: PLAN AS SHOWN; PROFILE HORIZ. VERT.; ONE INCH (REF)

NO.	DATE	REVISION	BY	APRVD.

FILE: C:\Users\vincent\AppData\Local\Temp\AcPublish_10688\41445001.01.dwg 03/12/2021 - 11:27am

TERMINAL LEGEND

- ⊠ BLOWER STARTER PANEL
- □ FIELD DEVICE TERMINAL
- ⊗ MCP-WWTP/PLC-WWTP (CONTROL PANEL)

SHEET NOTES

1. WIRE STARTER IN ACCORDANCE WITH MANUFACTURERS RECOMMENDATION FOR SINGLE-PHASE USE.
2. PROVIDE ADDITIONAL RELAYS AS REQUIRED FOR THE FUNCTIONALITY SHOWN AND SPECIFIED.
3. PROVIDE DOOR MOUNTED OVERLOAD RELAY RESET PUSHBUTTON.
4. WIRING SHOWN IS INTENDED TO CONVEY DESIGN INTENT. SUBMIT DETAILED WIRING DIAGRAMS FOR BLOWERS NO. 1 AND NO. 2 FOR ENGINEER REVIEW AND APPROVAL.

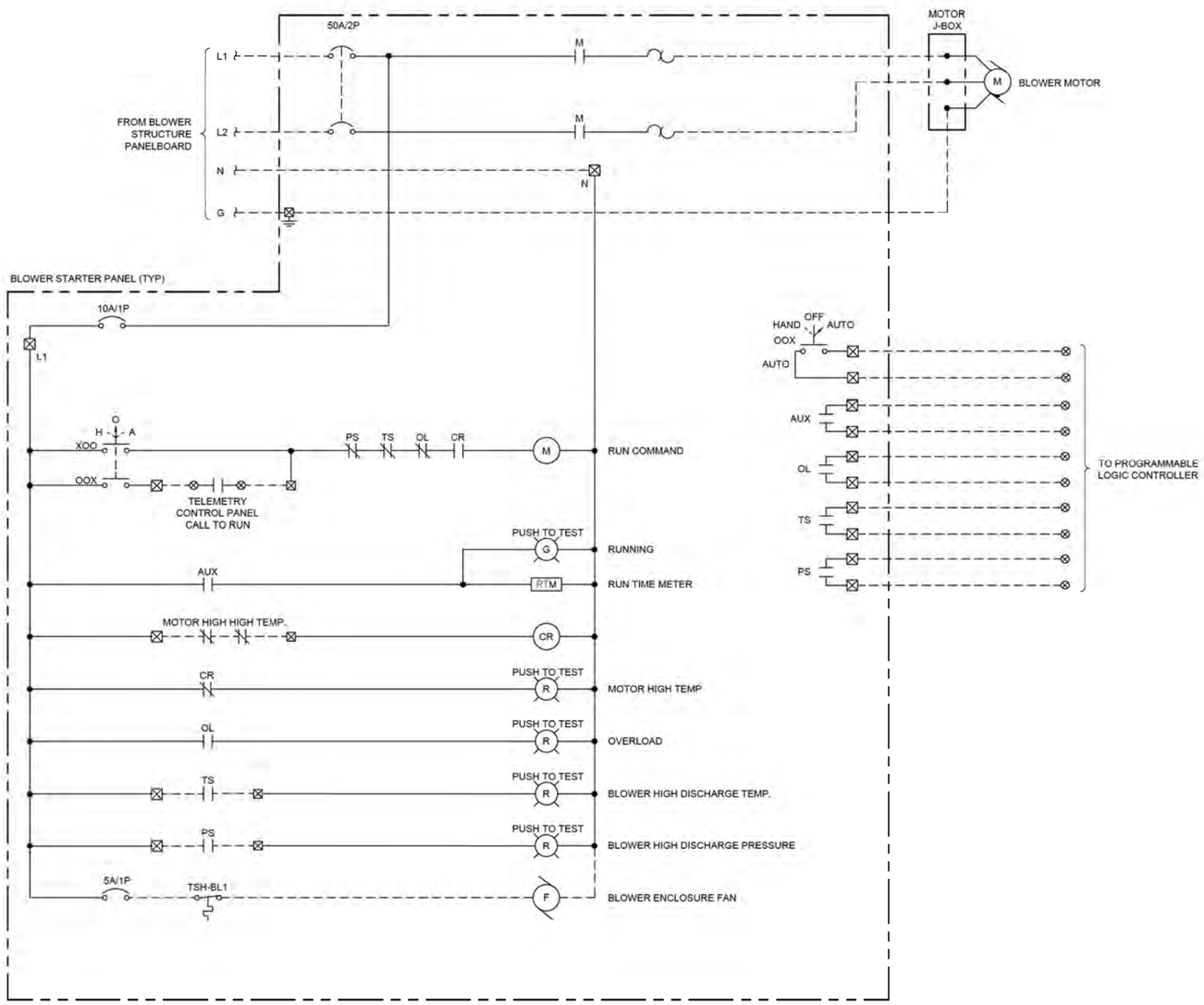

TYPICAL AERATION BLOWER WIRING DIAGRAM

3/12/2021

Trindera
2120 N LAKEWOOD DR STE B
COEUR D ALENE, IDAHO 83814
(208) 417-2967

SHEET 43 OF -

WW COLLECTION SYSTEM & WWTF IMPROVEMENTS PROJECT
AERATION BLOWER WIRING DIAGRAM
MARCH 2021

THE CHEHALIS TRIBE

CENTURY WEST ENGINEERING
5500 MEADOWS RD. #250 | LAKE OSWEGO, OR 97035
WWW.CENTURYWEST.COM | 503.419.2130

DESIGNED: R. DETERS
DRAWN: J. ROBERTS
CHECKED: G. WIESZ
CWE PROJECT NO. 41445001.01

SCALE
PLAN: AS SHOWN
PROFILE: HORIZ. / VERT.
ONE INCH (REF)

NO.	DATE	REVISION	BY	APRV'D

FILE: C:\Users\kristoweri\AppData\Local\Temp\AcPublish_10868\41445.001.01.dwg 03/12/2021 - 11:27am

NETWORK SYMBOLOGY

———	ETHERNET		DIRECTIONAL ANTENNA
—— · · ——	DEVICENET		BASIC OMNI DIRECTIONAL ANTENNA
———	UPS POWER		
– – – – – –	FIBER OPTICS.	PLC	PROGRAMMABLE LOGIC CONTROLLER
HUB	ETHERNET HUB	VFD	VARIABLE FREQUENCY DRIVE
MC	MEDIA CONVERTER	OIT	OPERATOR INTERFACE TERMINAL
		SSOL	SOLID STATE OVERLOAD RELAY
SW	ETHERNET SWITCH	UPS	UNINTERRUPTIBLE POWER SUPPLY

SHEET NOTES

1. FURNISH AND INSTALL (1) CAT5E ETHERNET CABLE FROM EXISTING LCP-MBR/PLC-MBR ETHERNET SWITCH TO NEW MCP-WWTP/PLC-WWTP ETHERNET SWITCH. .

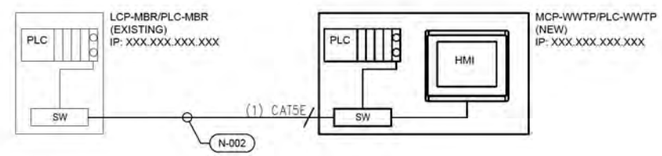

NETWORK DIAGRAM

GRADY JAMES WEISZ
STATE OF WASHINGTON
48918
REGISTERED
PROFESSIONAL ENGINEER

3/12/2021

Trindera
2120 N LAKEWOOD DR STE B
COEUR D ALENE, IDAHO 83814
(208) 417-2967

SHEET 44 OF -

WW COLLECTION SYSTEM & WWTF IMPROVEMENTS PROJECT
NETWORK WIRING DIAGRAM
MARCH 2021

THE CHEHALIS TRIBE

CENTURY WEST ENGINEERING
5500 MEADOWS RD. #250 | LAKE OSWEGO, OR 97035
WWW.CENTURYWEST.COM | 503.419.2130

DESIGNED: R. DETERS
DRAWN: K. KIDWELL
CHECKED: G. WIESZ
CWE PROJECT NO. 41445001.01

SCALE
PLAN: AS SHOWN
PROFILE: HORIZ. / VERT.
ONE INCH (REF)

NO.	DATE	REVISION	BY	APRVD

FILE: C:\Users\kidwell\AppData\Local\Temp\AcPublish_10808\41445.001.01.dwg 03/12/2021 - 11:27am

SHEET NOTES

1. FURNISH AND INSTALL (1) LOCAL CONTROL PANEL.
2. PANEL DESIGN IS GENERIC AND IS INTENDED TO CONVEY DESIGN INTENT. SUBMIT A DETAILED SITE SPECIFIC PANEL DESIGN FOR EACH METER VAULT LOCATION.

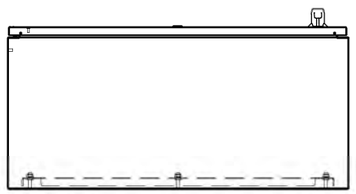

BOTTOM PANEL VIEW (EXTERIOR)
SCALE: 3/4"=1'-0"

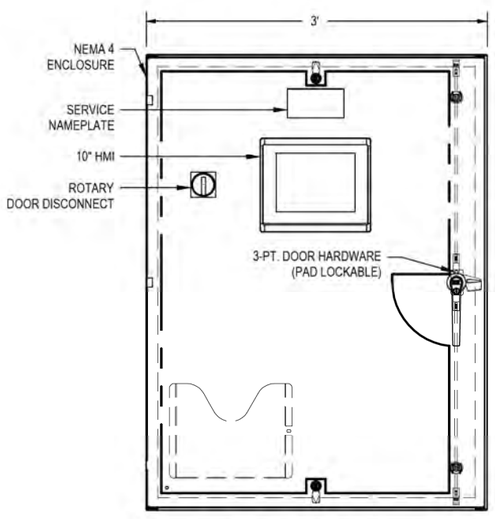

FRONT PANEL VIEW (EXTERIOR)
SCALE: 3/4"=1'-0"

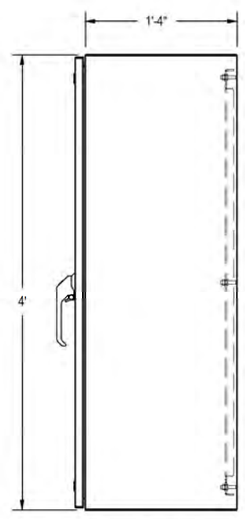

RIGHT SIDE PANEL VIEW (EXTERIOR)
SCALE: 3/4"=1'-0"

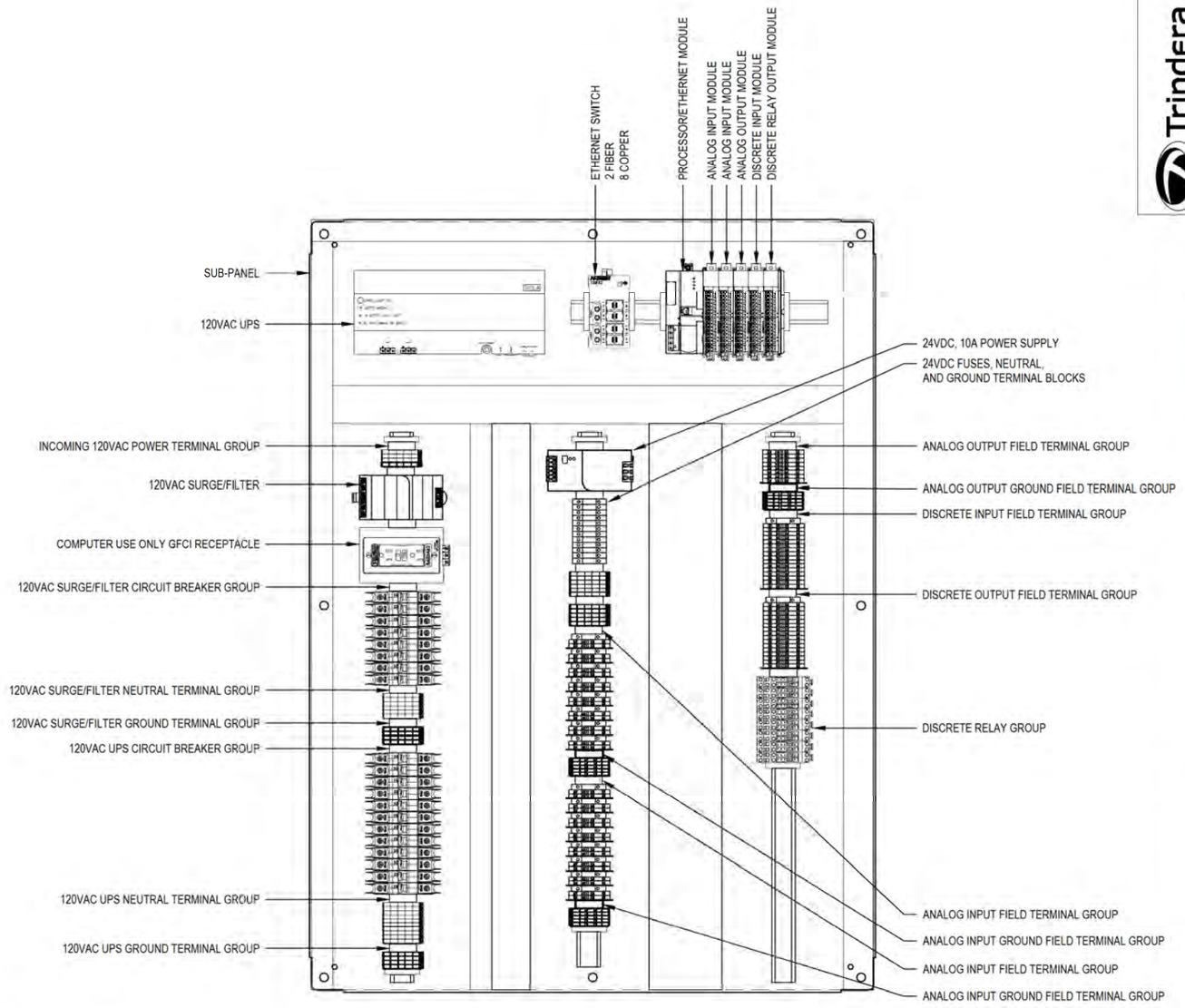

SUB-PANEL (INTERIOR)
SCALE: 1-1/2"=1'-0"

3/12/2021

Trindera
2120 N LAKEWOOD DR STE B
COEUR D ALENE, IDAHO 83814
(208) 417-2967

SHEET 45 OF -

WW COLLECTION SYSTEM & WWTF IMPROVEMENTS PROJECT
LCP ELEVATION
MARCH 2021

THE CHEHALIS TRIBE

CENTURY WEST ENGINEERING
5500 MEADOWS RD. #250 | LAKE OSWEGO, OR 97035
WWW.CENTURYWEST.COM | 503.419.2130

DESIGNED: R. DETERS
DRAWN: K. KIDWELL
CHECKED: G. WIESZ
CWE PROJECT NO. 41445001.01

SCALE
PLAN: AS SHOWN
PROFILE: HORIZ. / VERT.
ONE INCH (REF)

NO.	DATE	REVISION	BY	APRVD

FILE: C:\Users\kristowell\AppData\Local\Temp\AcPublish_10808\41445.001.01.dwg 03/12/2021 - 11:27am

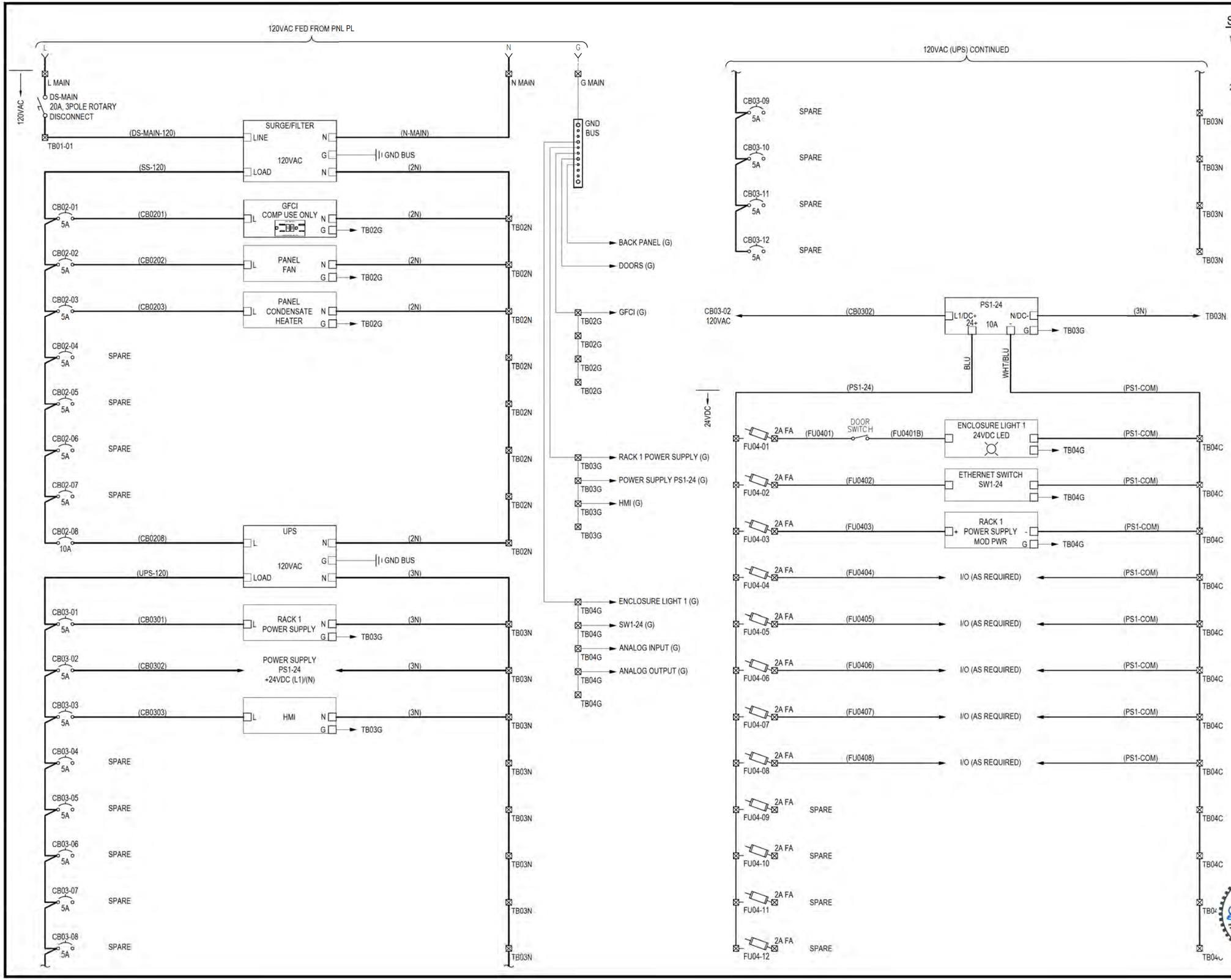

SHEET NOTES

1. PROVIDE CONTROLS, INSTRUMENTATION, AND WIRING. REFER TO PID FOR ADDITIONAL INFORMATION.
2. WIRING SHOWN IS GENERIC AND IS INTENDED TO CONVEY DESIGN INTENT. SUBMIT DETAILED SITE SPECIFIC WIRING DIAGRAMS FOR THE CONTROL PANEL.

Trindera
2120 N LAKEWOOD DR STE B
COEUR D ALENE, IDAHO 83814
(208) 417-2967

SHEET 46 OF -

WW COLLECTION SYSTEM & WWTF IMPROVEMENTS PROJECT
LCP WIRING DIAGRAM
MARCH 2021

THE CHEHALIS TRIBE

CENTURY WEST ENGINEERING
5500 MEADOWS RD. #250 | LAKE OSWEGO, OR 97035
WWW.CENTURYWEST.COM | 503.419.2130

DESIGNED: R. DETERS
DRAWN: K. KIDWELL
CHECKED: G. WIESZ
CWE PROJECT NO. 41445001.01

SCALE: PLAN AS SHOWN; PROFILE HORIZ. / VERT.; ONE INCH (REF)

NO.	DATE	REVISION	BY	APRVD

FILE: C:\Users\kiswell\AppData\Local\Temp\AcPublish_10808\41445.001.01.dwg 03/12/2021 - 11:27am

EQUIPMENT TAG#	DESCRIPTION	I/O TYPE
FIT-010	INFLUENT FLOW INDICATING TRANSMITTER	AI
FIT-012	INFLUENT FLOW INDICATING TRANSMITTER	AI
FC-013	AUTOMATIC SAMPLER	AI
FIT-021	INFLUENT FLOW INDICATING TRANSMITTER	AI
FIT-022	INFLUENT FLOW INDICATING TRANSMITTER	AI
AIT-023	LOW RANGE LASER TURBIDIMETER INDICATING TRANSMITTER	AI
FC-024	AUTOMATIC SAMPLER	AI
ZCC-011	MOTORIZED VALVE POSITION	AI

SHEET NOTES

1. PROVIDE CONTROLS, INSTRUMENTATION, AND WIRING. REFER TO PID FOR ADDITIONAL INFORMATION.
2. WIRING SHOWN IS GENERIC AND IS INTENDED TO CONVEY DESIGN INTENT. SUBMIT DETAILED SITE SPECIFIC WIRING DIAGRAMS FOR THE CONTROL PANEL.
3. REFERENCE PROCESS AND INSTRUMENTATION DIAGRAM, SHEET 34 & 35.

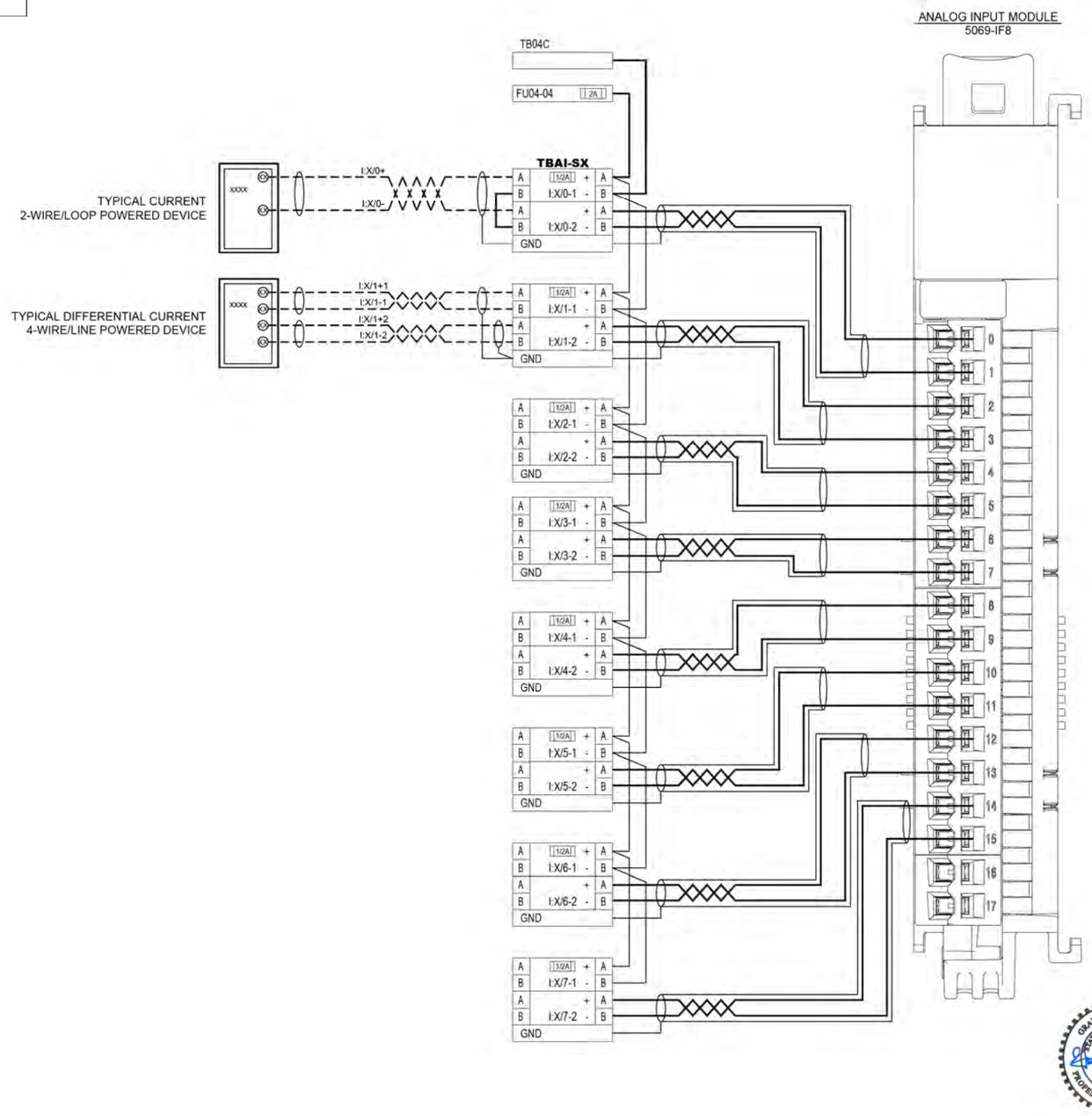

3/12/2021

Trindera
2120 N LAKEWOOD DR STE B
COEUR D ALENE, IDAHO 83814
(208) 417-2967

SHEET 47 OF -

WW COLLECTION SYSTEM &
WWTF IMPROVEMENTS PROJECT
LCP I/O DIAGRAM
MARCH 2021

THE CHEHALIS TRIBE

CENTURY WEST ENGINEERING
5500 MEADOWS RD. #250 | LAKE OSWEGO, OR 97035
WWW.CENTURYWEST.COM | 503.419.2130

DESIGNED: R. DETERS
DRAWN: K. KIDWELL
CHECKED: G. WIESZ
CWE PROJECT NO. 41445001.01

SCALE
PLAN: AS SHOWN
PROFILE: HORIZ. / VERT.
ONE INCH (REF)

NO.	DATE	REVISION	BY	APRVD

FILE: C:\Users\kkidwell\AppData\Local\Temp\AcPublish_10868\41445.001.01.dwg 03/12/2021 - 11:27am

EQUIPMENT TAG#	DESCRIPTION	I/O TYPE
N/A	N/A	AO

SHEET NOTES

1. PROVIDE CONTROLS, INSTRUMENTATION, AND WIRING. REFER TO PID FOR ADDITIONAL INFORMATION.
2. WIRING SHOWN IS GENERIC AND IS INTENDED TO CONVEY DESIGN INTENT. SUBMIT DETAILED SITE SPECIFIC WIRING DIAGRAMS FOR THE CONTROL PANEL.
3. REFERENCE PROCESS AND INSTRUMENTATION DIAGRAM, SHEET 34 & 35.

ANALOG OUTPUT MODULE
5069-OF8

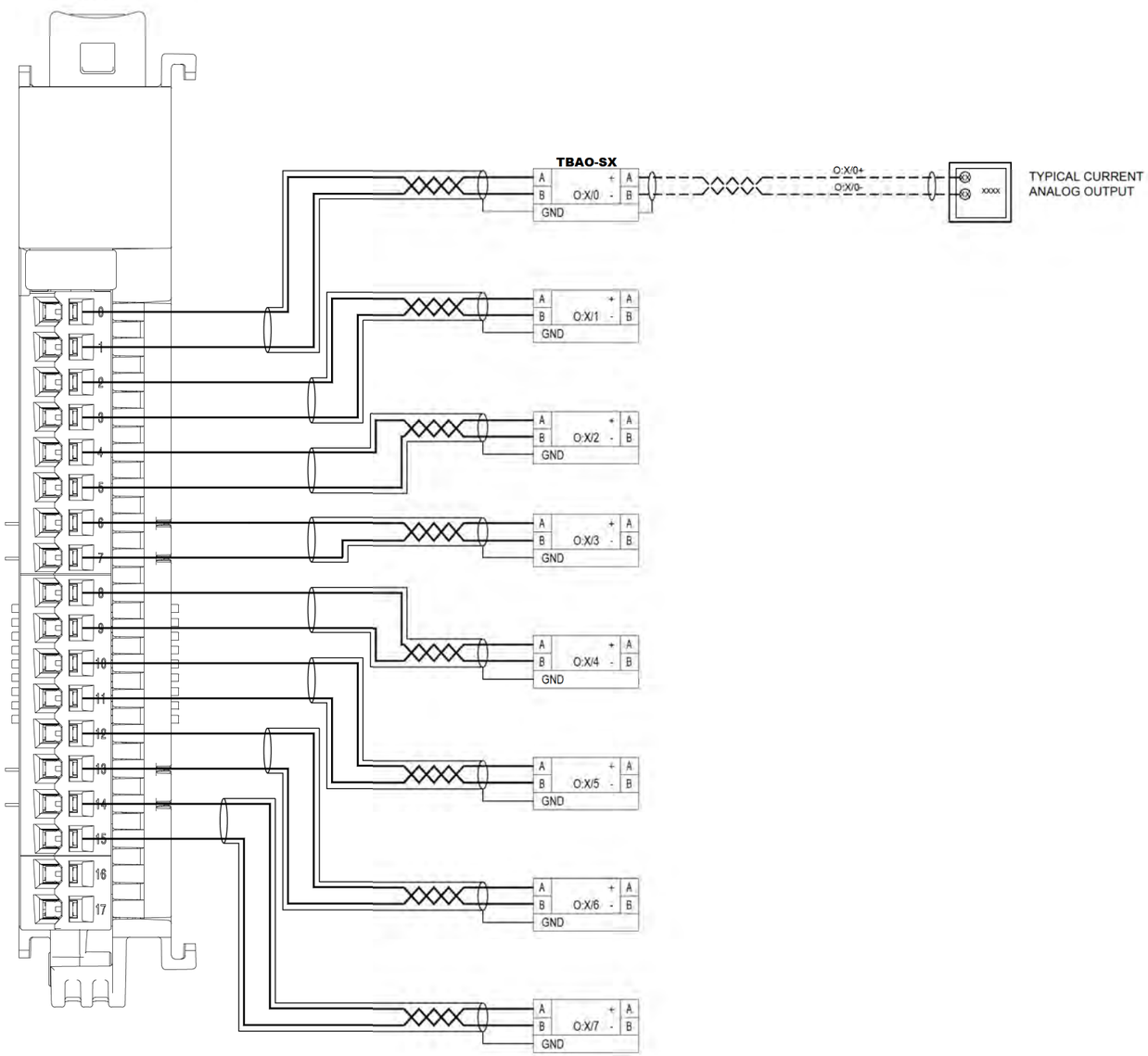

3/12/2021

Trindera
2120 N LAKEWOOD DR STE B
COEUR D ALENE, IDAHO 83814
(208) 417-2967

SHEET 48 OF -

WW COLLECTION SYSTEM &
WWTF IMPROVEMENTS PROJECT
LCP I/O DIAGRAM
MARCH 2021

THE CHEHALIS TRIBE

CENTURY WEST ENGINEERING
5500 MEADOWS RD. #250 | LAKE OSWEGO, OR 97035
WWW.CENTURYWEST.COM | 503.419.2130

DESIGNED: R. DETERS
DRAWN: K. KIDWELL
CHECKED: G. WIESZ
CWE PROJECT NO. 41445001.01

SCALE
PLAN: AS SHOWN
PROFILE: HORIZ.
VERT.
ONE INCH (REF)

NO.	DATE	REVISION	BY	APRV'D

FILE: C:\Users\kidwell\AppData\Local\Temp\AcPublish_10868\41445.001.01.dwg 03/12/2021 - 11:27am

EQUIPMENT TAG#	DESCRIPTION	I/O TYPE
YA-011	MOTORIZED VALVE FAULT	DI
ZIC-011	MOTORIZED VALVE CLOSED	DI
ZIO-011	MOTORIZED VALVE OPEN	DI
YA-041	MOTOR HIGH TEMP ALARM	DI
TA-041	HIGH TEMP ALARM (DISCHARGED)	DI
PAH-041	HIGH PRESSURE ALARM	DI
YA-042	MOTOR HIGH TEMP ALARM	DI
TA-042	HIGH TEMP ALARM (DISCHARGED)	DI
PAH-042	HIGH PRESSURE ALARM	DI
RI-041	RUN INDICATION	DI
RI-042	RUN INDICATION	DI

SHEET NOTES

1. PROVIDE CONTROLS, INSTRUMENTATION, AND WIRING. REFER TO PID FOR ADDITIONAL INFORMATION.
2. WIRING SHOWN IS GENERIC AND IS INTENDED TO CONVEY DESIGN INTENT. SUBMIT DETAILED SITE SPECIFIC WIRING DIAGRAMS FOR THE CONTROL PANEL.
3. REFERENCE PROCESS AND INSTRUMENTATION DIAGRAM, SHEET 34 & 35.

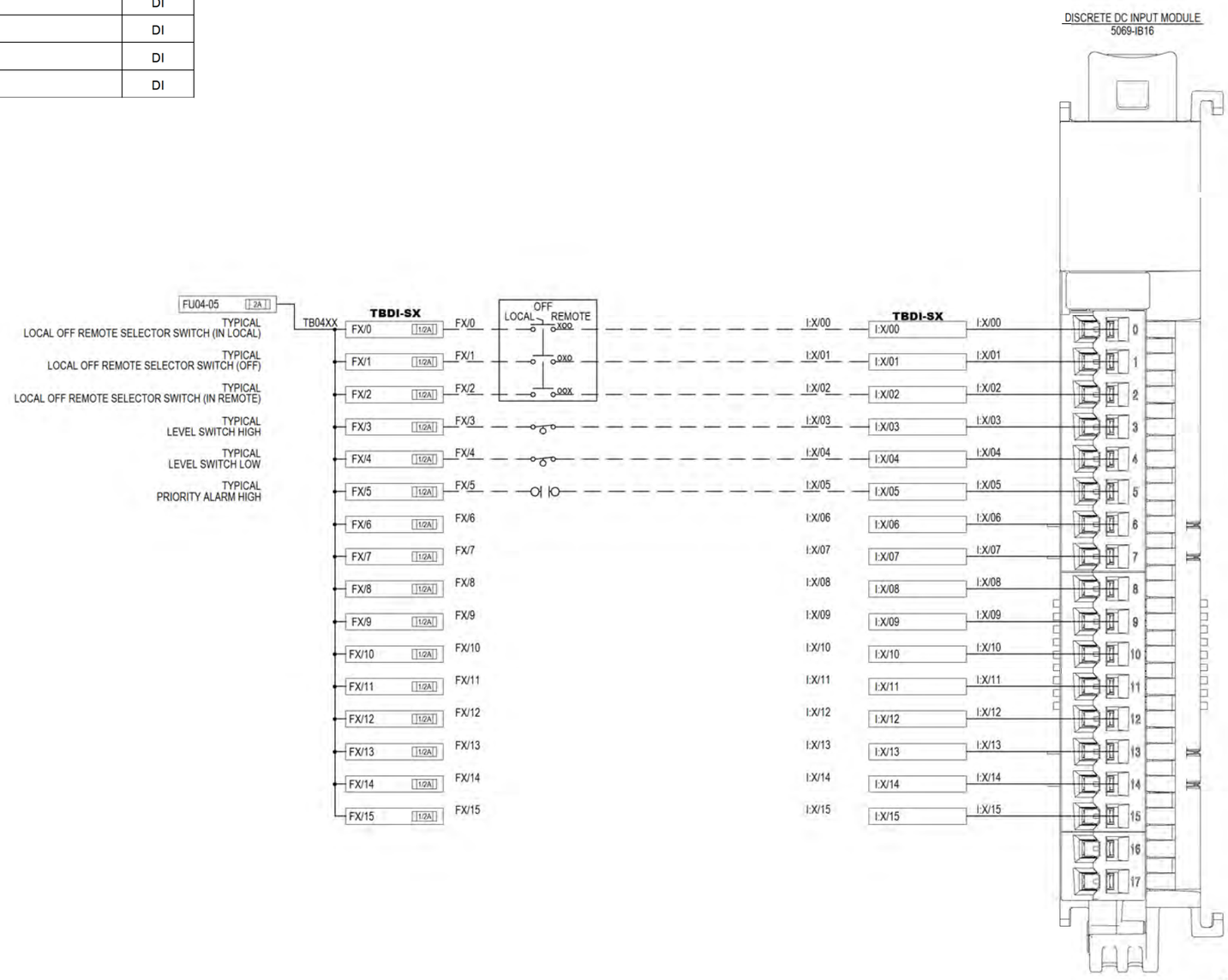

GRADY JAMES WEISZ
STATE OF WASHINGTON
48918
REGISTERED
PROFESSIONAL ENGINEER

3/12/2021

Trindera
2120 N LAKEWOOD DR STE B
COEUR D ALENE, IDAHO 83814
(208) 417-2967

SHEET 49 OF -

WW COLLECTION SYSTEM &
WWTF IMPROVEMENTS PROJECT
LCP I/O DIAGRAM
MARCH 2021

THE CHEHALIS TRIBE

CENTURY WEST ENGINEERING
5500 MEADOWS RD. #250 | LAKE OSWEGO, OR 97035
WWW.CENTURYWEST.COM | 503.419.2130

DESIGNED: R. DETERS
DRAWN: K. KIDWELL
CHECKED: G. WIESZ
CWE PROJECT NO. 41445001.01

SCALE
PLAN: AS SHOWN
PROFILE: HORIZ. / VERT.
ONE INCH (REF)

NO.	DATE	REVISION	BY	APRVD

FILE: C:\Users\kidwell\AppData\Local\Temp\AcPublish_10868\41445001.01.dwg 03/12/2021 - 11:27am

EQUIPMENT TAG#	DESCRIPTION	I/O TYPE
RC-041	CALL TO RUN	DO
RC-042	CALL TO RUN	DO

SHEET NOTES

1. PROVIDE CONTROLS, INSTRUMENTATION, AND WIRING. REFER TO PID FOR ADDITIONAL INFORMATION.
2. WIRING SHOWN IS GENERIC AND IS INTENDED TO CONVEY DESIGN INTENT. SUBMIT DETAILED SITE SPECIFIC WIRING DIAGRAMS FOR THE CONTROL PANEL.
3. REFERENCE PROCESS AND INSTRUMENTATION DIAGRAM, SHEET 34 & 35.

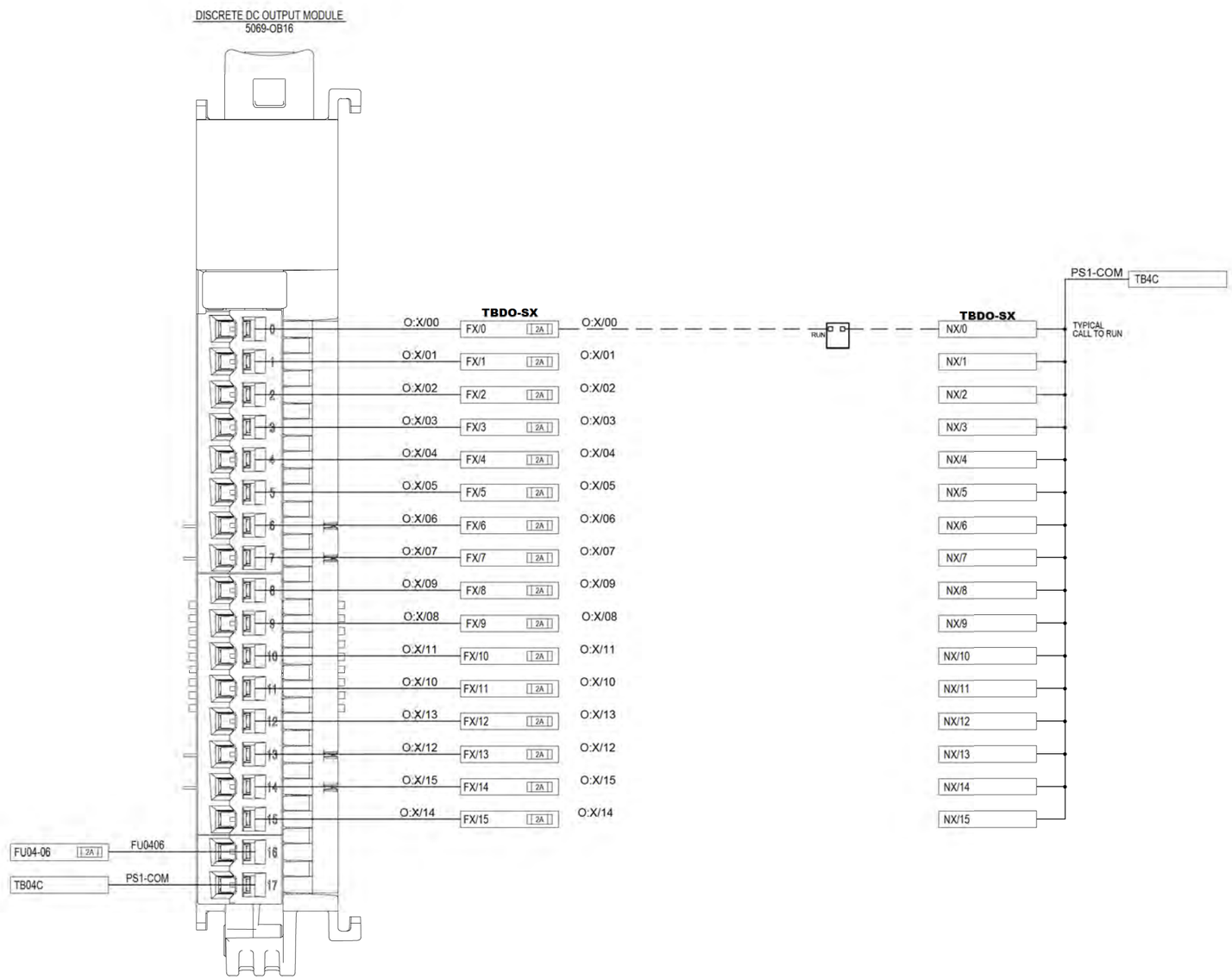

3/12/2021

Trindera
2120 N LAKEWOOD DR STE B
COEUR D ALENE, IDAHO 83814
(208) 417-2967

SHEET 50 OF -

WW COLLECTION SYSTEM & WWTF IMPROVEMENTS PROJECT
LCP I/O DIAGRAM
MARCH 2021

THE CHEHALIS TRIBE

CENTURY WEST ENGINEERING
5500 MEADOWS RD. #250 | LAKE OSWEGO, OR 97035
WWW.CENTURYWEST.COM | 503.419.2130

DESIGNED: R. DETERS
DRAWN: K. KIDWELL
CHECKED: G. WIESZ
CWE PROJECT NO. 41445001.01

SCALE
PLAN: AS SHOWN
PROFILE: HORIZ. / VERT.
ONE INCH (REF)

NO.	DATE	REVISION	BY	APRVD

FILE: C:\Users\kkidwell\AppData\Local\Temp\AcPublish_10868\41445.001.01.dwg 03/10/2021 - 11:27am

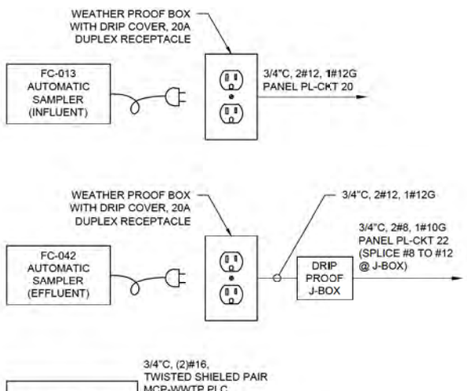

WWTP INSTRUMENTATION/ ELECTRICAL CONNECTION DETAILS (1)

SCALE: NTS

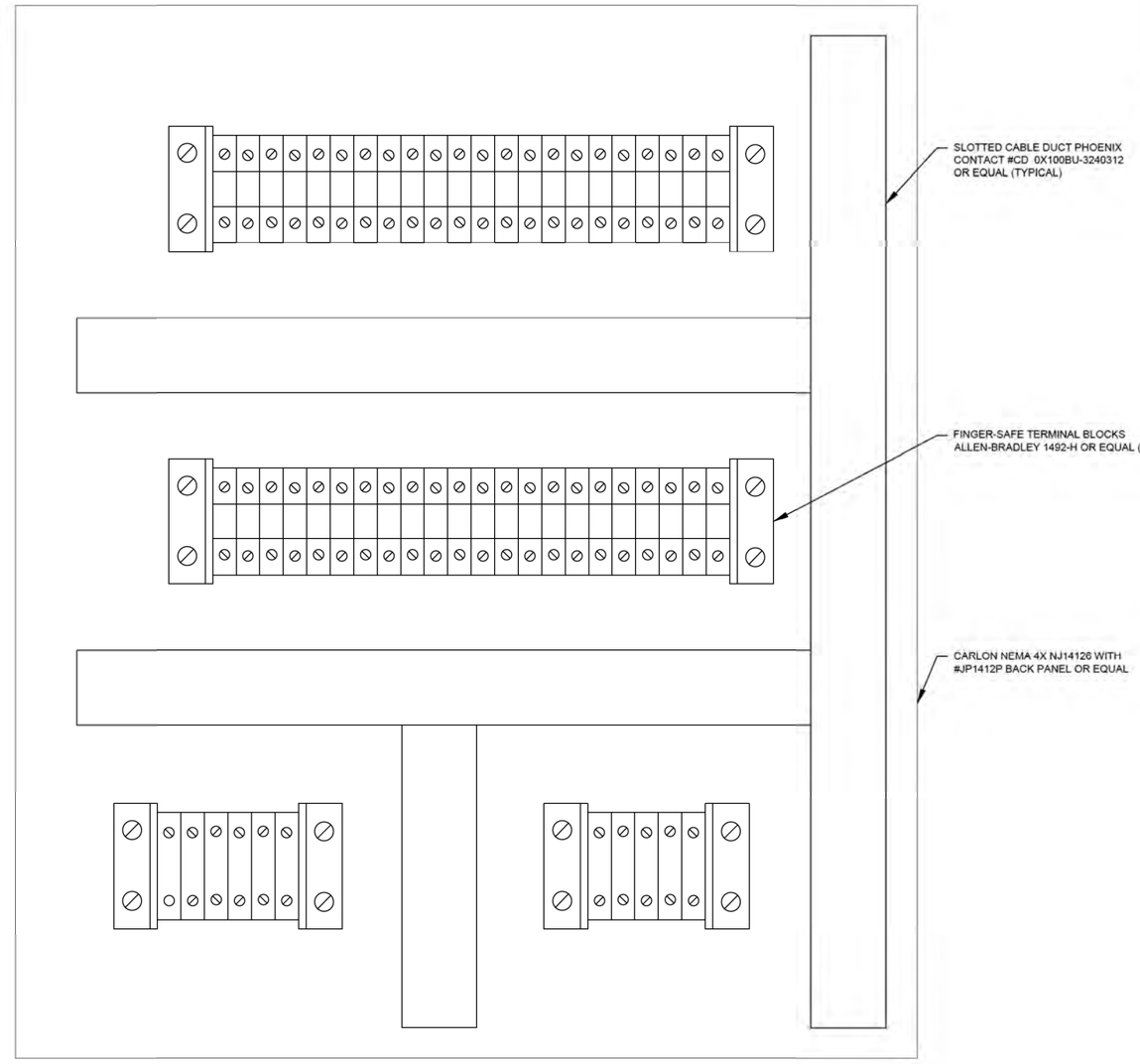

MBR BASIN JUNCTION BOX (2)

SCALE: NTS

Trindera
2120 N LAKEWOOD DR STE B
COEUR D ALENE, IDAHO 83814
(208) 417-2967

SHEET 51 OF -

WW COLLECTION SYSTEM & WWTF IMPROVEMENTS PROJECT
WWTP INSTRUMENT/ ELEC DETAILS
MARCH 2021

THE CHEHALIS TRIBE

CENTURY WEST ENGINEERING
5500 MEADOWS RD. #250 | LAKE OSWEGO, OR 97035
WWW.CENTURYWEST.COM | 503.419.2130

DESIGNED: R. DETERS
DRAWN: J. ROBERTS
CHECKED: G. WIESZ
CWE PROJECT NO. 41445001.01

SCALE
PLAN: AS SHOWN
PROFILE: HORIZ. / VERT.
ONE INCH (REF)

NO	DATE	REVISION	BY	APRVD

RICHARD JOHN DETERS, STATE OF WASHINGTON, 35661, REGISTERED PROFESSIONAL ENGINEER
DIGITAL SIGNATURE 3/12/21

FILE: C:\Users\kshowell\AppData\Local\Temp\AcPublish_10688\41445.001.01.dwg 03/12/2021 - 11:27am

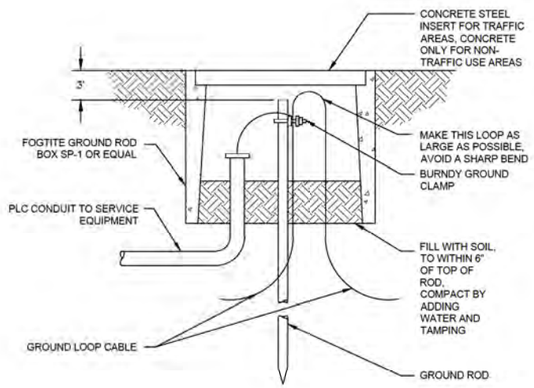

TYPICAL GROUND WELL DETAIL (1)

SCALE: NTS

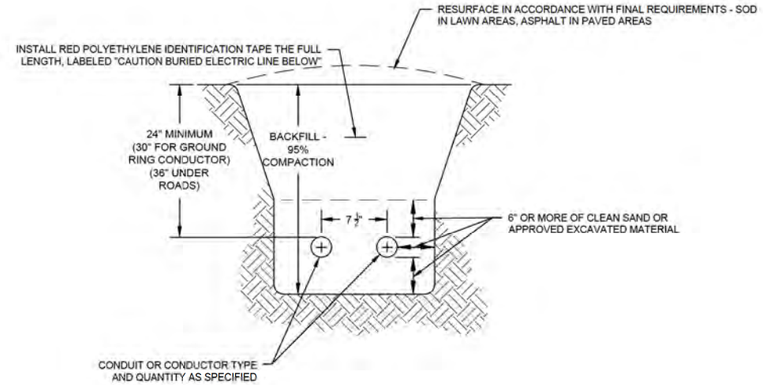

TYPICAL TRENCH DETAIL (2)

SCALE: NTS

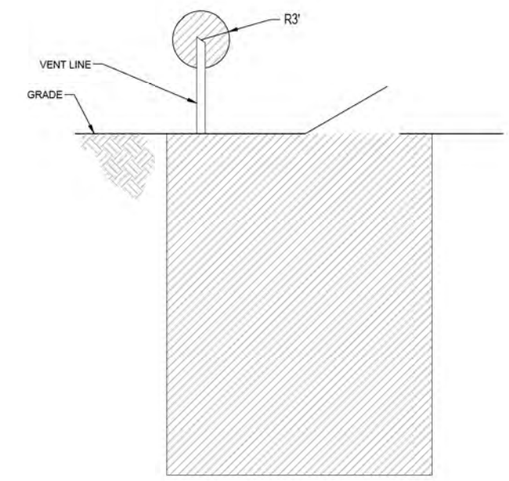

AREA CLASSIFICATION DRY WELL OR VAULT BELOWGRADE (BG) OR PARTIALLY BG EQUIP HOUSING (5)

SCALE: NTS

DIVISION 1 | DIVISION 2 | UNCLASSIFIED

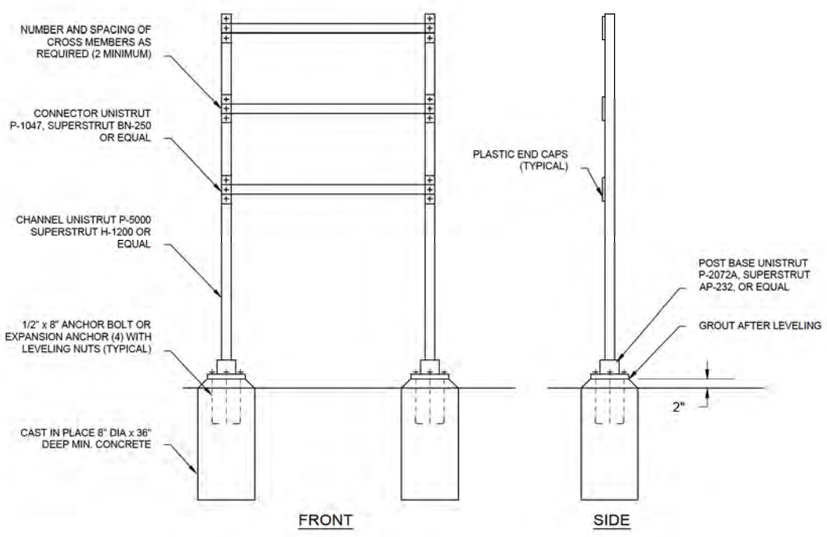

NOTE:

1. RACK CHANNELS AND FITTINGS SHALL BE HOT DIP GALVANIZED STEEL.

EQUIPMENT RACK (3)

SCALE: NTS

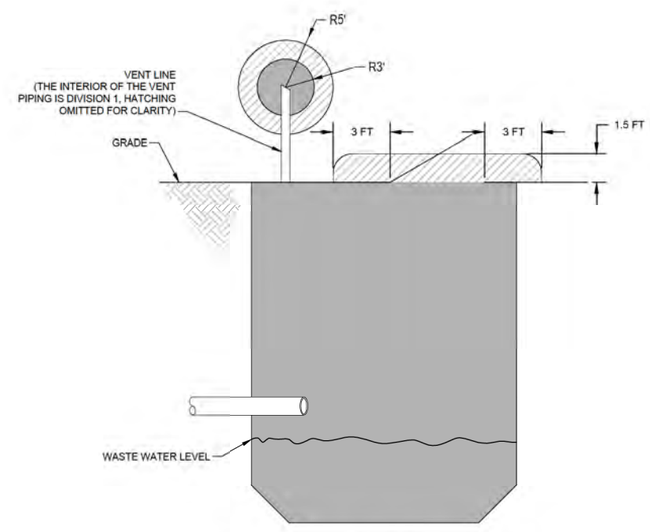

AREA CLASSIFICATION WET WELL OR BASIN SERVING SEPERATE OR COMBINED SEWER (4)

SCALE: NTS

DIVISION 1 | DIVISION 2 | UNCLASSIFIED

GRADY JAMES WEISZ
STATE OF WASHINGTON
48914
REGISTERED
PROFESSIONAL ENGINEER

3/12/2021

Trindera
2120 N LAKEWOOD DR STE B
COEUR D ALENE, IDAHO 83814
(208) 417-2967

SHEET 52 OF -

WW COLLECTION SYSTEM & WWTF IMPROVEMENTS PROJECT
ELECTRICAL DETAILS
MARCH 2021

THE CHEHALIS TRIBE

CENTURY WEST ENGINEERING
5500 MEADOWS RD. #250 | LAKE OSWEGO, OR 97035
WWW.CENTURYWEST.COM | 503.419.2130

DESIGNED: R. DETERS
DRAWN: J. ROBERTS
CHECKED: G. WIESZ
CWE PROJECT NO. 41445001.01

SCALE
PLAN: AS SHOWN
PROFILE: HORIZ. / VERT.
ONE INCH (REF.)

NO.	DATE	REVISION	BY	APRV'D

FILE: C:\Users\kbowen\AppData\Local\Temp\AcPublish_10868\41445.001.01.dwg 03/12/2021 - 11:27am

CONDUIT AND WIRE SCHEDULE

RACEWAY TAG	RACEWAY SIZE	WIRE SIZE	SERVICE	FROM	TO	NOTES
N-002	1"	CAT5e	NETWORK	LCP-MBR/PLC-MBR (EXISTING) ETHERNET SWITCH	MCP-WWTP/PLC-WWTP (NEW) (ETHERNET SWITCH)	
S-101	1"	(1) 16 AWG STP, 12 AWG EGC	SIGNAL	MCP-WWTP/PLC-WWTP (NEW) (FIR-010 FLOW)	FIT-010 FLOW INDICATING TRANSMITTER	
S-102	1"	OEM/MFG CABLE		FIT-010 FLOW INDICATING TRANSMITTER	FE-010 FLOW ELEMENT	
S-110	1"	(1) 16 AWG STP, 12 AWG EGC	SIGNAL	MCP-WWTP/PLC-WWTP (NEW) (ZCC-011 POSITION CONTROL)	ZCV-011 VALVE ACTUATOR (POSITION)	
S-111	1"	(1) 16 AWG STP, 12 AWG EGC	SIGNAL	MCP-WWTP/PLC-WWTP (NEW) (ZI-011 POSITION FEEDBACK)	ZI-011 POSITION FEEDBACK	
S-120	1"	(1) 16 AWG STP, 12 AWG EGC	SIGNAL	MCP-WWTP/PLC-WWTP (NEW) (FIR-012 FLOW)	FIT-012 FLOW INDICATING TRANSMITTER	
S-121	1"	OEM/MFG CABLE		FIT-012 FLOW INDICATING TRANSMITTER	FE-012 FLOW ELEMENT	
S-130	1"	(1) 16 AWG STP, 12 AWG EGC	SIGNAL	MCP-WWTP/PLC-WWTP (NEW) (FQC-013 FLOW CONTROL)	AUTOMATIC COMPOSITE SAMPLER	
S-150	1"	(1) 16 AWG STP, 12 AWG EGC	SIGNAL	MCP-WWTP/PLC-WWTP (NEW) (FIR-021 FLOW)	FIT-021 FLOW INDICATING TRANSMITTER	
S-151	1"	OEM/MFG CABLE		FIT-021 FLOW INDICATING TRANSMITTER	FE-021 FLOW ELEMENT	
S-160	1"	(1) 16 AWG STP, 12 AWG EGC	SIGNAL	MCP-WWTP/PLC-WWTP (NEW) (FIR-022 FLOW)	FIT-022 FLOW INDICATING TRANSMITTER	
S-161	1"	OEM/MFG CABLE		FIT-022 FLOW INDICATING TRANSMITTER	FE-022 FLOW ELEMENT	
S-170	1"	(1) 16 AWG STP, 12 AWG EGC	SIGNAL	MCP-WWTP/PLC-WWTP (NEW) (AIR-023 TURBIDITY)	AIT-023 TURBIDITYMETER	
S-171	1"	OEM/MFG CABLE		AIT-023 TURBIDITYMETER	AE-023 TURBIDITY ELEMENT	
S-180	1"	(1) 16 AWG STP, 12 AWG EGC	SIGNAL		AUTOMATIC COMPOSITE SAMPLER	
C-110	1"	(2) 14 AWG, 12 AWG EGC	DISCRETE	MCP-WWTP/PLC-WWTP (NEW) (YA-011 FAULT)	ZCV-011 VALVE ACTUATOR (FAULT)	
C-110		(2) 14 AWG, 12 AWG EGC	DISCRETE	MCP-WWTP/PLC-WWTP (NEW) (ZIC-011 CLOSED)	ZCV-011 VALVE ACTUATOR (CLOSED)	
C-110		(2) 14 AWG, 12 AWG EGC	DISCRETE	MCP-WWTP/PLC-WWTP (NEW) (ZIO-011 OPEN)	ZCV-011 VALVE ACTUATOR (OPEN)	
C-140	1"	(2) 14 AWG, 12 AWG EGC	DISCRETE	LCP-MBR/PLC-MBR (EXISTING) (ZIO-014 OPEN)	ZCV-014 VALVE ACTUATOR (OPEN)	
C-140		(2) 14 AWG, 12 AWG EGC	DISCRETE	LCP-MBR/PLC-MBR (EXISTING) (ZIC-014 CLOSED)	ZCV-014 VALVE ACTUATOR (CLOSED)	
C-140		(2) 14 AWG, 12 AWG EGC	DISCRETE	LCP-MBR/PLC-MBR (EXISTING) (ZCO-014 CALL TO OPEN)	ZCV-014 VALVE ACTUATOR (OPEN COMMAND)	
C-140		(2) 14 AWG, 12 AWG EGC	DISCRETE	LCP-MBR/PLC-MBR (EXISTING) (ZCC-014 CALL TO CLOSE)	ZCV-014 VALVE ACTUATOR (CLOSE COMMAND)	
C-201	1"	(2) 14 AWG, 12 AWG EGC	DISCRETE	MCP-WWTP/PLC-WWTP (NEW) (RC-041 CALL TO RUN)	LCP-BLR-1 (NEW)	
C-201		(2) 14 AWG, 12 AWG EGC	DISCRETE	MCP-WWTP/PLC-WWTP (NEW) (RI-041 RUN INDICATION)	LCP-BLR-1 (NEW) RL-041 RUN	DISPLAYED ON HMI
C-201		(2) 14 AWG, 12 AWG EGC	DISCRETE	MCP-WWTP/PLC-WWTP (NEW) (YA-041 MOTOR HIGH TEMP ALARM)	LCP-BLR-1 (NEW) YA-041 MOTOR HIGH TEMP	
C-201		(2) 14 AWG, 12 AWG EGC	DISCRETE	MCP-WWTP/PLC-WWTP (NEW) (TA-041 DISCHARGE HIGH TEMP ALARM)	LCP-BLR-1 (NEW) TA-041 DISCHARGE HIGH TEMP	
C-201		(2) 14 AWG, 12 AWG EGC	DISCRETE	MCP-WWTP/PLC-WWTP (NEW) (PAH-041 HIGH PRESSURE ALARM)	LCP-BLR-1 (NEW) PA-041 HIGH PRESSURE	
C-202	1"	(2) 14 AWG, 12 AWG EGC	DISCRETE	MCP-WWTP/PLC-WWTP (NEW) (RC-042 CALL TO RUN)	LCP-BLR-2 (NEW)	
C-202		(2) 14 AWG, 12 AWG EGC	DISCRETE	MCP-WWTP/PLC-WWTP (NEW) (RI-042 RUN INDICATION)	LCP-BLR-2 (NEW) RL-042 RUN	DISPLAYED ON HMI
C-202		(2) 14 AWG, 12 AWG EGC	DISCRETE	MCP-WWTP/PLC-WWTP (NEW) (YA-042 MOTOR HIGH TEMP ALARM)	LCP-BLR-2 (NEW) YA-042 MOTOR HIGH TEMP	
C-202		(2) 14 AWG, 12 AWG EGC	DISCRETE	MCP-WWTP/PLC-WWTP (NEW) (TA-042 DISCHARGE HIGH TEMP ALARM)	LCP-BLR-2 (NEW) TA-042 DISCHARGE HIGH TEMP	
C-202		(2) 14 AWG, 12 AWG EGC	DISCRETE	MCP-WWTP/PLC-WWTP (NEW) (PAH-042 HIGH PRESSURE ALARM)	LCP-BLR-2 (NEW) PA-042 HIGH PRESSURE	
C-203	1"	(2) 14 AWG, 12 AWG EGC	DISCRETE	LCP-BLR-1 (NEW) (YA-041 MOTOR HIGH TEMP ALARM LIGHT)	POND #1 BLOWER NO.1 MOTOR (NEW) TS-041A MOTOR WIND TEMP	
C-203		(2) 14 AWG, 12 AWG EGC	DISCRETE	LCP-BLR-1 (NEW) (TA-041 DISCHARGE HIGH TEMP ALARM LIGHT)	POND #1 BLOWER NO.1 MOTOR (NEW) TS-041 DISCHARGE HIGH TEMP	
C-203		(2) 14 AWG, 12 AWG EGC	DISCRETE	LCP-BLR-1 (NEW) (PA-041 HIGH PRESSURE ALARM LIGHT)	POND #1 BLOWER NO.1 MOTOR (NEW) PS-041 HIGH PRESSURE SWITCH	
C-204	1"	(2) 14 AWG, 12 AWG EGC	DISCRETE	LCP-BLR-2 (NEW) (YA-042 MOTOR HIGH TEMP ALARM LIGHT)	POND #1 BLOWER NO.2 MOTOR (NEW) TS-042A MOTOR WIND TEMP	
C-204		(2) 14 AWG, 12 AWG EGC	DISCRETE	LCP-BLR-2 (NEW) (TA-042 DISCHARGE HIGH TEMP ALARM LIGHT)	POND #1 BLOWER NO.2 MOTOR (NEW) TS-042 DISCHARGE HIGH TEMP	
C-204		(2) 14 AWG, 12 AWG EGC	DISCRETE	LCP-BLR-2 (NEW) (PA-042 HIGH PRESSURE ALARM LIGHT)	POND #1 BLOWER NO.2 MOTOR (NEW) PS-042 HIGH PRESSURE SWITCH	
C-301	1"	(8) 14 AWG, 12 AWG EGC	DISCRETE	MCP-WWTP/PLC-WWTP (NEW)	LCP-PDPS(NEW)	
R-301	1"		SPARE	EAST END OF FILTER BUILDING (STUB UP)	LCP-PDPS(NEW)	
C-302	1"	(2) 14 AWG, 12 AWG EGC	DISCRETE	LCP-PDPS (NEW) (LAL-030 LOW LEVEL ALARM LIGHT)	NEW PLANT DRAIN PUMP STATION LSLL-030 LEVEL SWITCH LOW LOW	
C-302		(2) 14 AWG, 12 AWG EGC	DISCRETE	LCP-PDPS (NEW)	NEW PLANT DRAIN PUMP STATION LSL-030 LEVEL SWITCH LOW	VIA CORD SPLICE IN JBOX
C-302		(2) 14 AWG, 12 AWG EGC	DISCRETE	LCP-PDPS (NEW)	NEW PLANT DRAIN PUMP STATION LSH-030 LEVEL SWITCH HIGH	
C-302		(2) 14 AWG, 12 AWG EGC	DISCRETE	LCP-PDPS (NEW) (LAH-030 HIGH LEVEL ALARM LIGHT)	NEW PLANT DRAIN PUMP STATION LSHH-030 LEVEL SWITCH HIGH HIGH	
P-001	3/4"	(2) 12 AWG, 12AWG EGC	120VAC (NON-UPS)	PNL PL	MCP-WWTP/PLC-WWTP (NEW)	
P-101	3/4"	(2) 12 AWG, 12AWG EGC	120VAC (UPS)	MCP-WWTP/PLC-WWTP (NEW)	FIT-010 FLOW INDICATING TRANSMITTER (DEVICE POWER)	
P-110	1"	(2) 12 AWG, 12AWG EGC	120VAC (NON-UPS)	PNL PL	ZCV-011 VALVE ACTUATOR (DEVICE POWER)	
P-120	3/4"	(2) 12 AWG, 12AWG EGC	120VAC (UPS)	MCP-WWTP/PLC-WWTP (NEW)	FIT-012 FLOW INDICATING TRANSMITTER (DEVICE POWER)	
P-130	3/4"	(2) 12 AWG, 12AWG EGC	120VAC (NON-UPS)	PNL PL	AUTOMATIC COMPOSITE SAMPLER	
P-140	3/4"	(2) 12 AWG, 12AWG EGC	120VAC (NON-UPS)	PNL PL	ZCV-014 VALVE ACTUATOR (DEVICE POWER)	
P-150	3/4"	(2) 12 AWG, 12AWG EGC	120VAC (UPS)	MCP-WWTP/PLC-WWTP (NEW)	FIT-021 FLOW INDICATING TRANSMITTER (DEVICE POWER)	
P-160	3/4"	(2) 12 AWG, 12AWG EGC	120VAC (UPS)	MCP-WWTP/PLC-WWTP (NEW)	FIT-022 FLOW INDICATING TRANSMITTER (DEVICE POWER)	
P-170	3/4"	(2) 12 AWG, 12AWG EGC	120VAC (UPS)	MCP-WWTP/PLC-WWTP (NEW)	AIT-023 TURBIDITYMETER (DEVICE POWER)	
P-180	3/4"	(2) 12 AWG, 12 AWG EGC	120VAC (NON-UPS)	PNL PL	AUTOMATIC COMPOSITE SAMPLER (EFFLUENT)	
P-201	1"	(3) 8 AWG, 10 AWG EGC	208VAC	BLOWER STRUCTURE PANELBOARD (EXISTING)	POND #1 BLOWER NO. 1 STARTER	
P-202	1"	(3) 8 AWG, 10 AWG EGC	208VAC	BLOWER STRUCTURE PANELBOARD (EXISTING)	POND #1 BLOWER NO. 2 STARTER	
P-203	1"	(3) 8 AWG, 10 AWG EGC	208VAC	POND #1 BLOWER NO. 1 STARTER	POND #1 BLOWER NO. 1 MOTOR	
P-204	1"	(3) 8 AWG, 10 AWG EGC	208VAC	POND #1 BLOWER NO. 2 STARTER	POND #1 BLOWER NO. 2 MOTOR	
P-301	1-1/4"	(3) 4 AWG, 8 AWG EGC	208VAC	PNL PL	LCP-PDPS (NEW) (DEVICE POWER)	
P-302	2"	(3) 10 AWG, 10 AWG EGC	208VAC	LCP-PDPS (NEW)	NEW PLANT DRAIN PUMP STATION PUMP 1 PUMP (POWER)	
P-303	2"	(3) 10 AWG, 10 AWG EGC	208VAC	LCP-PDPS (NEW)	NEW PLANT DRAIN PUMP STATION PUMP 2 PUMP (POWER)	
C-401	1"	(2) 14 AWG, 12 AWG EGC	DISCRETE	LCP-WCPS (NEW)	WELLNESS CENTER PUMP STATION LEVEL SWITCH LOW LOW	
C-401		(2) 14 AWG, 12 AWG EGC	DISCRETE	LCP-WCPS (NEW)	WELLNESS CENTER PUMP STATION LEVEL SWITCH LOW	VIA CORD SPLICE IN JBOX
C-401		(2) 14 AWG, 12 AWG EGC	DISCRETE	LCP-WCPS (NEW)	WELLNESS CENTER PUMP STATION LEVEL SWITCH HIGH	
C-401		(2) 14 AWG, 12 AWG EGC	DISCRETE	LCP-WCPS (NEW)	WELLNESS CENTER PUMP STATION LEVEL SWITCH HIGH HIGH	
P-401	1-1/4"	(3) 4 AWG, 8 AWG EGC	208VAC	MBR BUILDING PANELBOARD (EXISTING)	LCP-WCPS (NEW) (DEVICE POWER)	
P-402	2"	(3) 10 AWG, 10 AWG EGC	208VAC	LCP-WCPS (NEW)	WELNESS CENTER PUMP STATION PUMP 1 (DEVICE POWER)	
P-403	2"	(3) 10 AWG, 10 AWG EGC	208VAC	LCP-WCPS (NEW)	WELNESS CENTER PUMP STATION PUMP 2 (DEVICE POWER)	
C-601	1"	(2) 14 AWG, 12 AWG EGC	DISCRETE	LCP-TAPS (NEW)	TAHOWN PUMP STATION LEVEL SWITCH LOW LOW	
C-601		(2) 14 AWG, 12 AWG EGC	DISCRETE	LCP-TAPS (NEW)	TAHOWN PUMP STATION LEVEL SWITCH LOW	VIA CORD SPLICE IN JBOX
C-601		(2) 14 AWG, 12 AWG EGC	DISCRETE	LCP-TAPS (NEW)	TAHOWN PUMP STATION LEVEL SWITCH HIGH	
C-601		(2) 14 AWG, 12 AWG EGC	DISCRETE	LCP-TAPS (NEW)	TAHOWN PUMP STATION LEVEL SWITCH HIGH HIGH	
P-601	1"	(3) 10 AWG, 10 AWG EGC	120VAC	TAHOWN AREA PUMP STATION PANELBOARD	TAHOWN AREA PUMP STATION TAPB-2	
P-602	1"	(3) 10 AWG, 10 AWG EGC	120VAC	TAHOWN AREA PUMP STATION TAPB-2	LCP-TAPS (NEW)	
P-603	1"	(3) 12 AWG, 12 AWG EGC	120VAC	LCP-TAPS (NEW)	TAHOWN PUMP STATION PUMP 1 (DEVICE POWER)	
P-604	1"	(3) 12 AWG, 12 AWG EGC	120VAC	LCP-TAPS (NEW)	TAHOWN PUMP STATION PUMP 2 (DEVICE POWER)	
C-XX1	1"	(2) 14 AWG, 12 AWG EGC	DISCRETE	TYPICAL SIMPLEX PUMP STATION PANEL	LEVEL SWITCH LOW LOW	
C-XX1		(2) 14 AWG, 12 AWG EGC	DISCRETE	TYPICAL SIMPLEX PUMP STATION PANEL	LEVEL SWITCH LOW	VIA CORD SPLICE IN JBOX
C-XX1		(2) 14 AWG, 12 AWG EGC	DISCRETE	TYPICAL SIMPLEX PUMP STATION PANEL	LEVEL SWITCH HIGH	
C-XX1		(2) 14 AWG, 12 AWG EGC	DISCRETE	TYPICAL SIMPLEX PUMP STATION PANEL	LEVEL SWITCH HIGH HIGH	
P-XX1	1"	(3) 10 AWG, 10 AWG EGC	120VAC	TYPICAL EXISTING METER STATION	TYPICAL SIMPLEX PUMP STATION PANEL	
P-XX2	1"	(3) 12 AWG, 12 AWG EGC	120VAC	TYPICAL SIMPLEX PUMP STATION PANEL	PUMP 1 (DEVICE POWER)	

1

KEY NOTES

1. CONTRACTOR TO REFERENCE CIVIL SHEETS 19, 21, 22, & 23 FOR TEN SIMPLEX PUMP STATIONS CONDUCTOR LENGTHS FROM EXISTING METERS TO NEW SIMPLEX PUMP STATIONS.

   SIMPLEX PUMP STATIONS & RACEWAY TAGS (REPLACE "XX"):
   81 - MAKUM #38
   82 - MAKUM #40
   83 - MAKUM #42
   84 - MAKUM #43
   85 - YOUTH CENTER
   86 - SMOKE HOUSE
   87 - NATURAL RESOURCES
   88 - FACILITIES
   89 - TAHOWN #1
   90 - TAHOWN #2

GRADY JAMES WEISZ
STATE OF WASHINGTON
48914
REGISTERED
PROFESSIONAL ENGINEER

3/12/2021

Trindera
2120 N LAKEWOOD DR STE B
COEUR D ALENE, IDAHO 83814
(208) 417-2967

SHEET 53 OF -

WW COLLECTION SYSTEM & WWTF IMPROVEMENTS PROJECT
ELECT CONDUIT & WIRE SCHEDULE
MARCH 2021

THE CHEHALIS TRIBE

CENTURY WEST ENGINEERING
5500 MEADOWS RD. #250 | LAKE OSWEGO, OR 97035
WWW.CENTURYWEST.COM | 503.419.2130

DESIGNED: R. DETERS
DRAWN: J. ROBERTS
CHECKED: G. WIESZ
CWE PROJECT NO. 41445001.01

SCALE
PLAN: AS SHOWN
PROFILE: HORIZ. / VERT.
ONE INCH (REF)

NO.	DATE	REVISION	BY	APRVD

FILE: C:\Users\kkidwell\AppData\Local\Temp\AcPublish_10088\41445.001.01.dwg 03/12/2021 - 11:27am

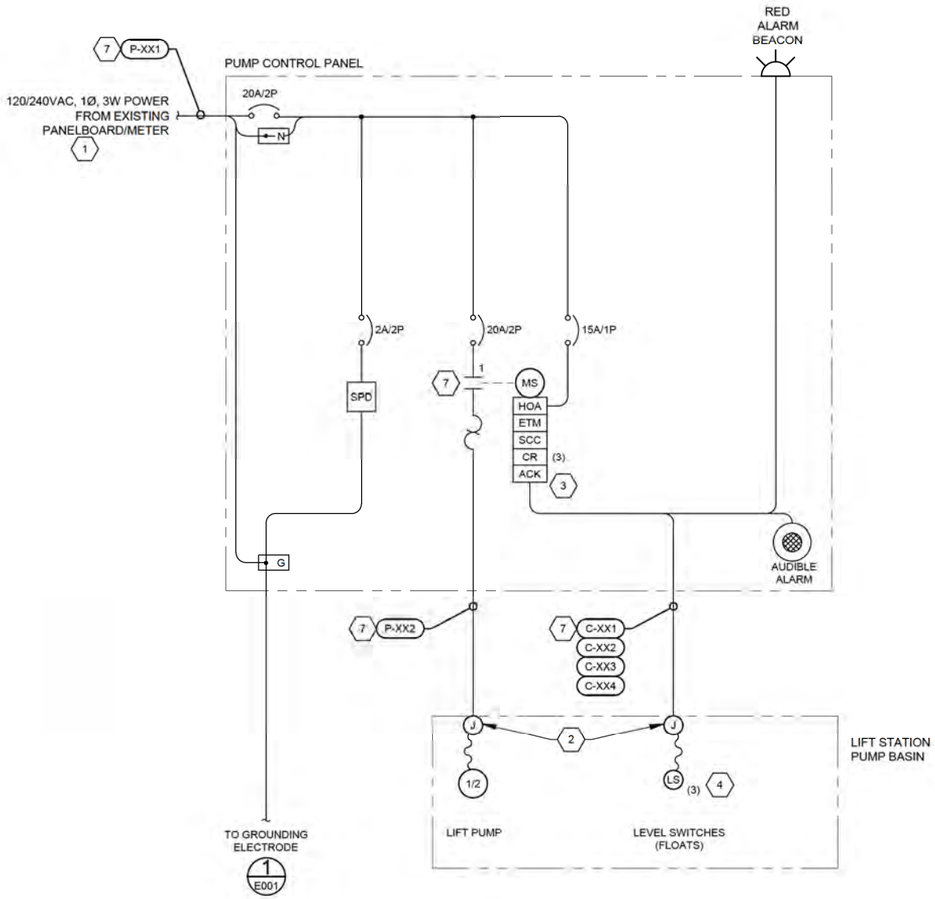

TYPICAL SIMPLEX SYSTEM 5
ONE-LINE DIAGRAM

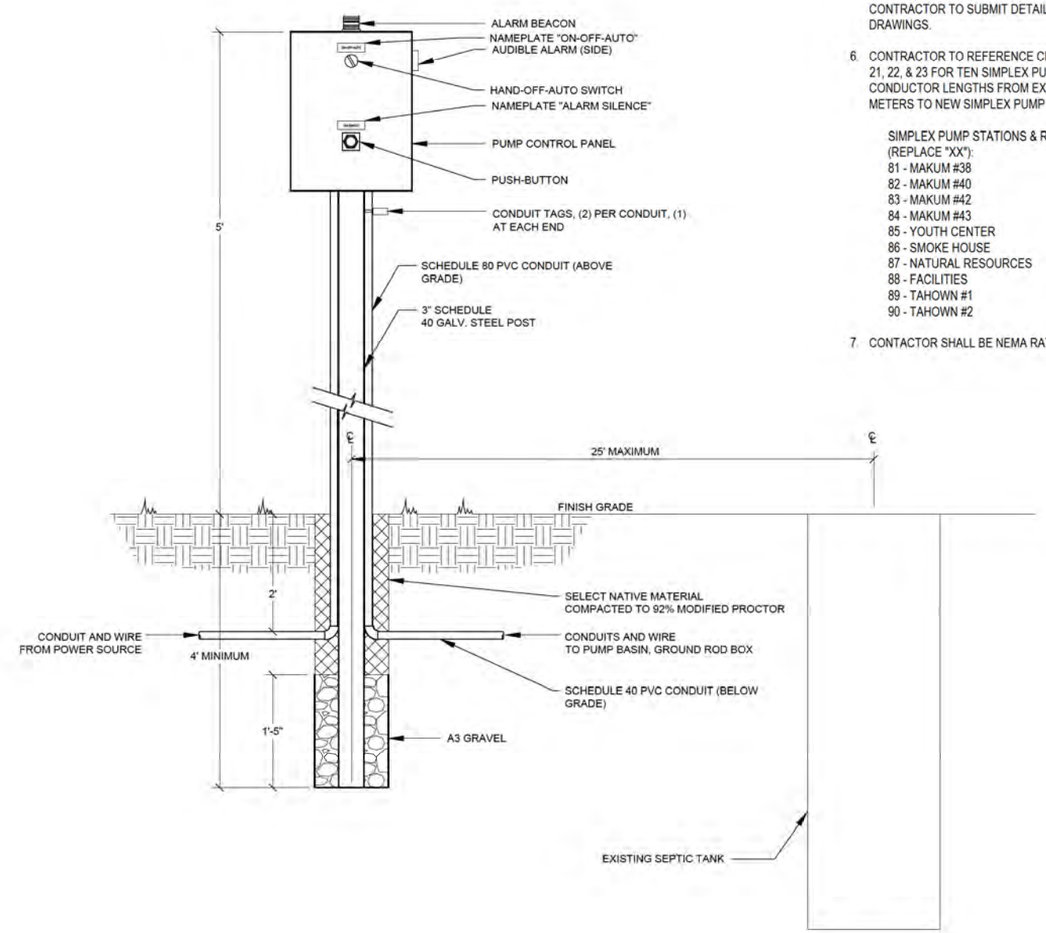

5 TYPICAL SIMPLEX CONTROL PANEL 1
SCALE: NTS

KEY NOTES

1. CONTRACTOR TO PROVIDE AND INSTALL 30A/2P BREAKER AT POWER SOURCE, CONDUIT, WIRE, AND BACKFILL TO MAIN DISCONNECT OF PUMP PANEL.
2. PROVIDE AIR TIGHT SEAL BETWEEN JUNCTION BOX AND PANEL.
3. ACKNOWLEDGE FOR AUDIBLE ALARM ONLY.
4. PROVIDE HIGH LEVEL ALARM, PUMP ON, PUMP OFF, AND REDUNDANT OFF LOW LEVEL ALARM FLOATS.
5. REFER TO CIVIL PLANS AND SPECIFICATIONS FOR SIMPLEX LIFT STATION QUANTITY AND LOCATIONS. WIRING DIAGRAMS ARE GENERIC, CONTRACTOR TO SUBMIT DETAILED SHOP DRAWINGS.
6. CONTRACTOR TO REFERENCE CIVIL SHEETS 19, 21, 22, & 23 FOR TEN SIMPLEX PUMP STATIONS CONDUCTOR LENGTHS FROM EXISTING METERS TO NEW SIMPLEX PUMP STATIONS.

   SIMPLEX PUMP STATIONS & RACEWAY TAGS (REPLACE "XX"):
   81 - MAKUM #38
   82 - MAKUM #40
   83 - MAKUM #42
   84 - MAKUM #43
   85 - YOUTH CENTER
   86 - SMOKE HOUSE
   87 - NATURAL RESOURCES
   88 - FACILITIES
   89 - TAHOWN #1
   90 - TAHOWN #2
7. CONTACTOR SHALL BE NEMA RATED.

Trindera
2120 N LAKEWOOD DR STE B
COEUR D ALENE, IDAHO 83814
(208) 417-2967

SHEET 54 OF -

WW COLLECTION SYSTEM &
WWTF IMPROVEMENTS PROJECT
TYP SIMPLEX PMP STA ELEC DETAILS
MARCH 2021

THE CHEHALIS TRIBE

CENTURY WEST ENGINEERING
5500 MEADOWS RD. #250 | LAKE OSWEGO, OR 97035
WWW.CENTURYWEST.COM | 503.419.2130

DESIGNED: R. DETERS
DRAWN: J. ROBERTS
CHECKED: G. WIESZ
CWE PROJECT NO. 41445001.01

SCALE
PLAN: AS SHOWN
PROFILE: HORIZ. / VERT.
ONE INCH (REF)

NO.	DATE	REVISION	BY	APRVD

GRADY JAMES WIESZ, STATE OF WASHINGTON, 48918, REGISTERED PROFESSIONAL ENGINEER
3/12/2021

RICHARD JOHN DETERS, STATE OF WASHINGTON, 38861, REGISTERED PROFESSIONAL ENGINEER
DIGITAL SIGNATURE
3/12/21

FILE: C:\Users\kbaudet\AppData\Local\Temp\AcPublish_10680\41445.001.01.dwg 03/12/2021 - 11:27am